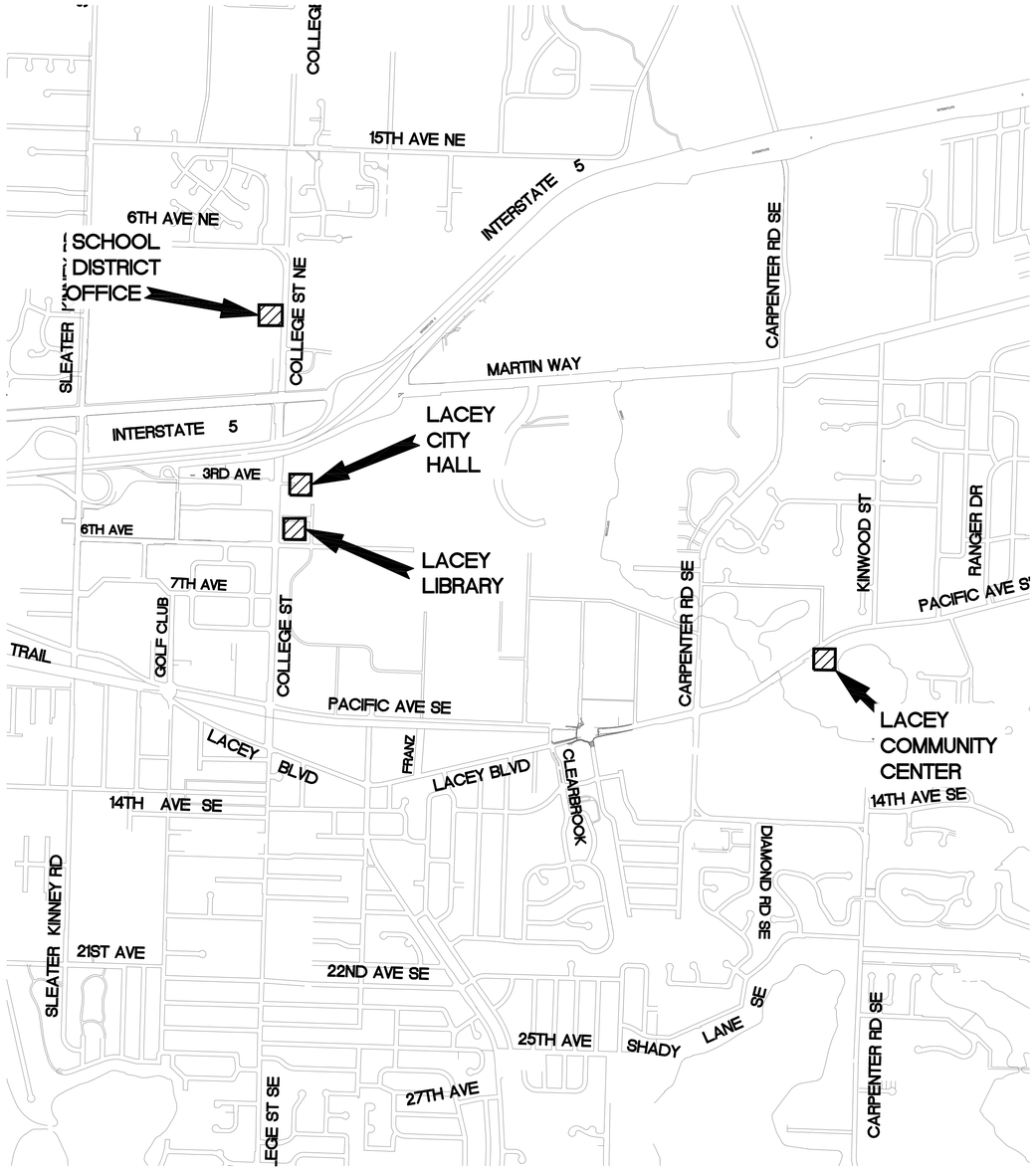

DATUM

LACEY

VICINITY MAP
CITY OF LACEY, WASHINGTON

0 2,000 4,000

LACEY

ELECTRIC VEHICLE CHARGERS

LACEY CONTRACT # PW 2020-20
FEDERAL AID # CM-0643 (007)
SEC. 15, 16, 17, 22, T18N, R1W, W.M.

LACEY CITY OFFICIALS

MAYOR: Andy Ryder
DEPUTY MAYOR: Malcolm Miller
CITY COUNCIL: Carolyn Cox
Ed Kunkel
Lenny Greenstein
Robin Vazquez
Michael Steadman

CITY MANAGER: Scott H. Spence
CITY ATTORNEY: David S. Schneider
CITY ENGINEER: Roger Schoessel, P.E.

DIRECTOR OF PUBLIC WORKS: Scott Egger, P.E.

Roger A Schoessel City Engr for 4/29/22
DATE

SHEET INDEX

Sheet Number	Sheet Title
--	Cover Sheet
1	Community Center
2	Library
3	City Hall
4	School District Office
5	Details

CITY OF LACEY, WASHINGTON
DEPARTMENT OF PUBLIC WORKS
420 COLLEGE STREET SE
LACEY, WA 98503-1238 (360) 491-5600

LACEY

Martin Hoppe

DESIGNED: CRS
DRAFTED: CRS
CHECKED: MAH
HORZ. SCALE: AS SHOWN
VERT. SCALE: AS SHOWN
FILE: EV CHARGERS - CS

ELECTRIC VEHICLE CHARGERS
COVER SHEET

REVISION BLOCK

NO.	DATE	DESCRIPTION

DWG NO.
D-21-32

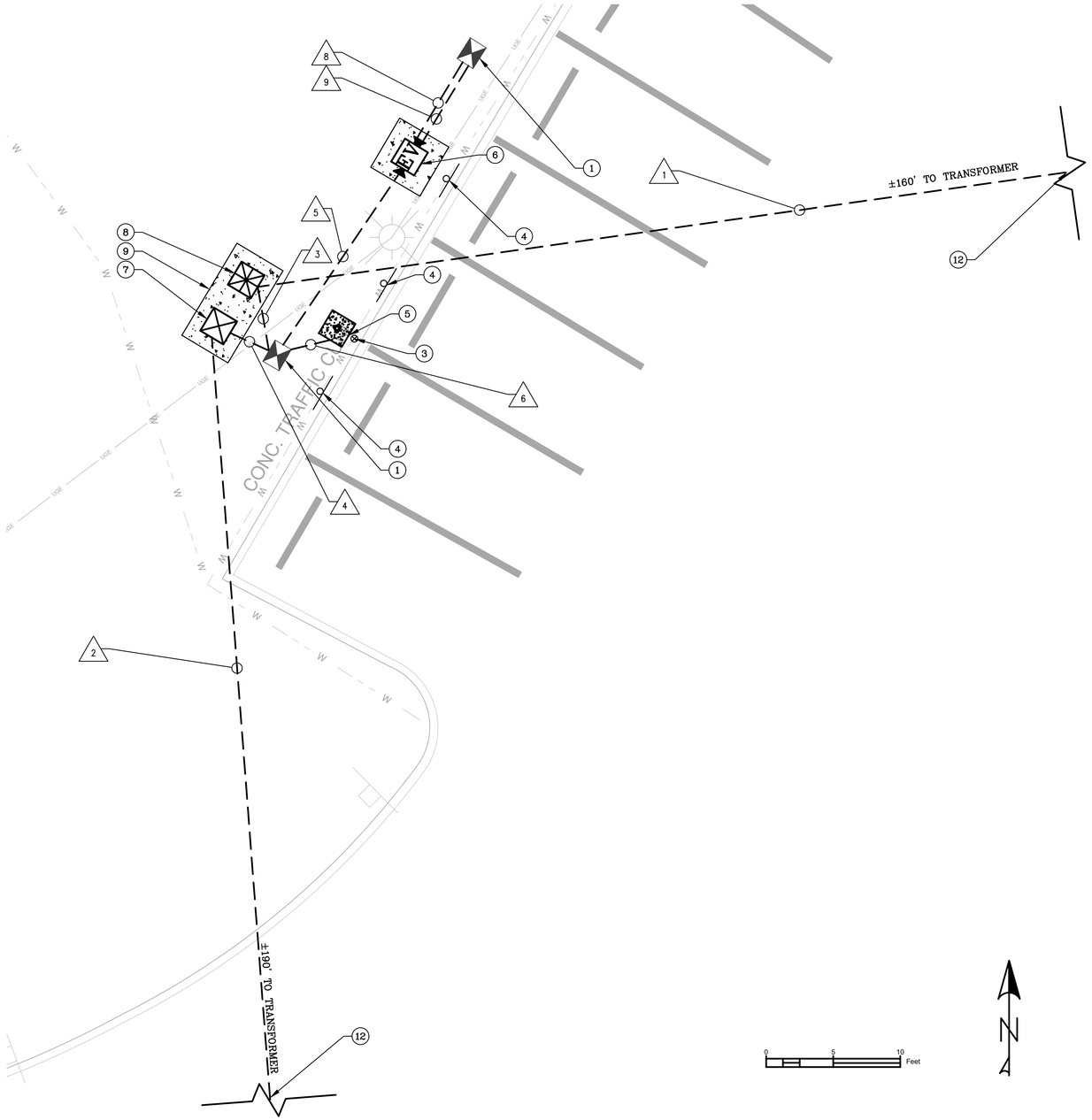

WIRING SCHEDULE

RUN NO.	CONDUIT SIZE	WIRE – XHHW CU PHASE	N	G	COMMENT
1	3"	3–350	1–350	–	SERVICE PER PSE REQUIREMENTS
2	3"	2–350	1–350	–	SERVICE PER PSE REQUIREMENTS
3	1–1/4"	3–#4	–	1–#8	PROVIDE SPARE 1–1/4" FOR FUTURE
4	1"	4–#8 1–#12	1–#12	1–#10	2 EV FEEDERS, 1 CONTROL CKT
5	1–1/4"	3–#4 1–#12	1–#12	1–#8	1 EV FEEDER, 1 CONTROL CKT
6	1"	4–#8	–	1–#10	2 EV FEEDERS
7	1"	–	–	–	SPARE
8	3"	–	–	–	SPARE FOR FUTURE EV CHARGER
9	3/4"	–	–	–	SPARE FOR FUTURE EV CHARGER

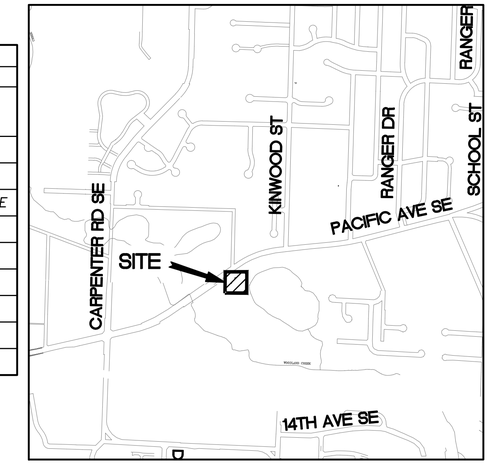

KEY MAP
1"=1000'

CONSTRUCTION NOTES

1. INSTALL TYPE 1 JUNCTION BOX, PER WSDOT STANDARD PLAN J–40.10–04.
2. INSTALL TYPE 2 JUNCTION BOX, PER WSDOT STANDARD PLAN J–40.10–04.
3. INSTALL TYPE 2 BOLLARD PER WSDOT STANDARD PLAN H–60.20–01.
4. 24"X24" SIGN D9–11B (ALTERNATE) TO BE INSTALLED BY OTHERS
5. INSTALL 2'x2'x2' CONC. PAD WITH ANCHOR BOLTS AND CONDUIT STUB. SEE DETAIL AND MANUFACTURER'S INSTALLATION INSTRUCTIONS. EV CHARGER TO BE INSTALLED BY OTHERS.
6. INSTALL SINGLE PORT DUAL CONNECTOR TYPE 3 EV CHARGER, CHARGEPOINT CPE250, ON 51"x51"x12" CONC. PAD. SEE MANUFACTURER'S INSTALLATION INSTRUCTIONS.
7. INSTALL 120V/240V 200A METERED SERVICE PEDESTAL WITH 200A DISTRIBUTION PANEL, 18 CKT WITH 200A MAIN. TWO 40A/2 CIRCUIT BREAKERS FOR EV CHARGERS.
8. INSTALL 277/480V 200A METERED SERVICE PEDESTAL WITH 200A DISTRIBUTION PANEL, 18CKT WITH 200A MAIN. SERVICE DISCONNECT AHEAD OF METER. 80A/3 CIRCUIT BREAKER FOR EV CHARGER, AND SPARE 80A/3 FOR FUTURE.
9. INSTALL CONC. EQUIPMENT PAD. SEE DETAIL.
10. NEW VAULT PROVIDED BY PSE. EXCAVATION, BACKFILL, AND RESTORATION PROVIDED BY CONTRACTOR PER PSE REQUIREMENTS. SEE PSE INSTALLATION DRAWING.
11. EXISTING 120/240V SERVICE PEDESTAL. DEMOLISH EXISTING TYPE 1 CHARGER CIRCUITS. PROVIDE FOUR 40A/2 TYPE 2 EV CHARGER CIRCUITS AND ONE 20A/1 CONTROL CIRCUIT.
12. SEE PSE PLAN FOR FULL LAYOUT AND CONTRACTOR RESPONSIBILITIES.

LEGEND

- TYPE 1 JUNCTION BOX
- TYPE 2 JUNCTION BOX
- TYPE 2 EV CHARGER PAD
- TYPE 3 EV CHARGER
- 120/240V ELECTRICAL SERVICE
- 277/480V ELECTRICAL SERVICE
- TRANSFORMER
- SIGN
- BOLLARD

CITY OF LACEY, WASHINGTON
DEPARTMENT OF PUBLIC WORKS
420 COLLEGE STREET S.E.
LACEY, WA 98503–1238 (360) 491–5600
LACEY

Martin Hoppe
Digitally signed by Martin Hoppe
DN: cn=Martin Hoppe, o, ou, mail=mhoppe@ci.lacey.wa.us, c=US
Date: 2020.04.29 14:47:30 -07'00'

DESIGNED:	CRS
DRAFTED:	CRS
CHECKED:	MAH
HORZ. SCALE:	1"=5'
VERT. SCALE:	N/A
FILE: EV CHARGERS – SHEETS	

ELECTRIC VEHICLE CHARGERS COMMUNITY CENTER

REVISION BLOCK

NO.	DATE	DESCRIPTION

DWG NO. D–21–32

SHEET NO. 1 OF 5

K:\Projects\2020\PW 2020–20 EV Charging Stations PSA\Design\04 Design Info\03 AutoCAD Files\EV Chargers – Sheets.dwg, 04–29–22, 8:37am, CStalber, 1

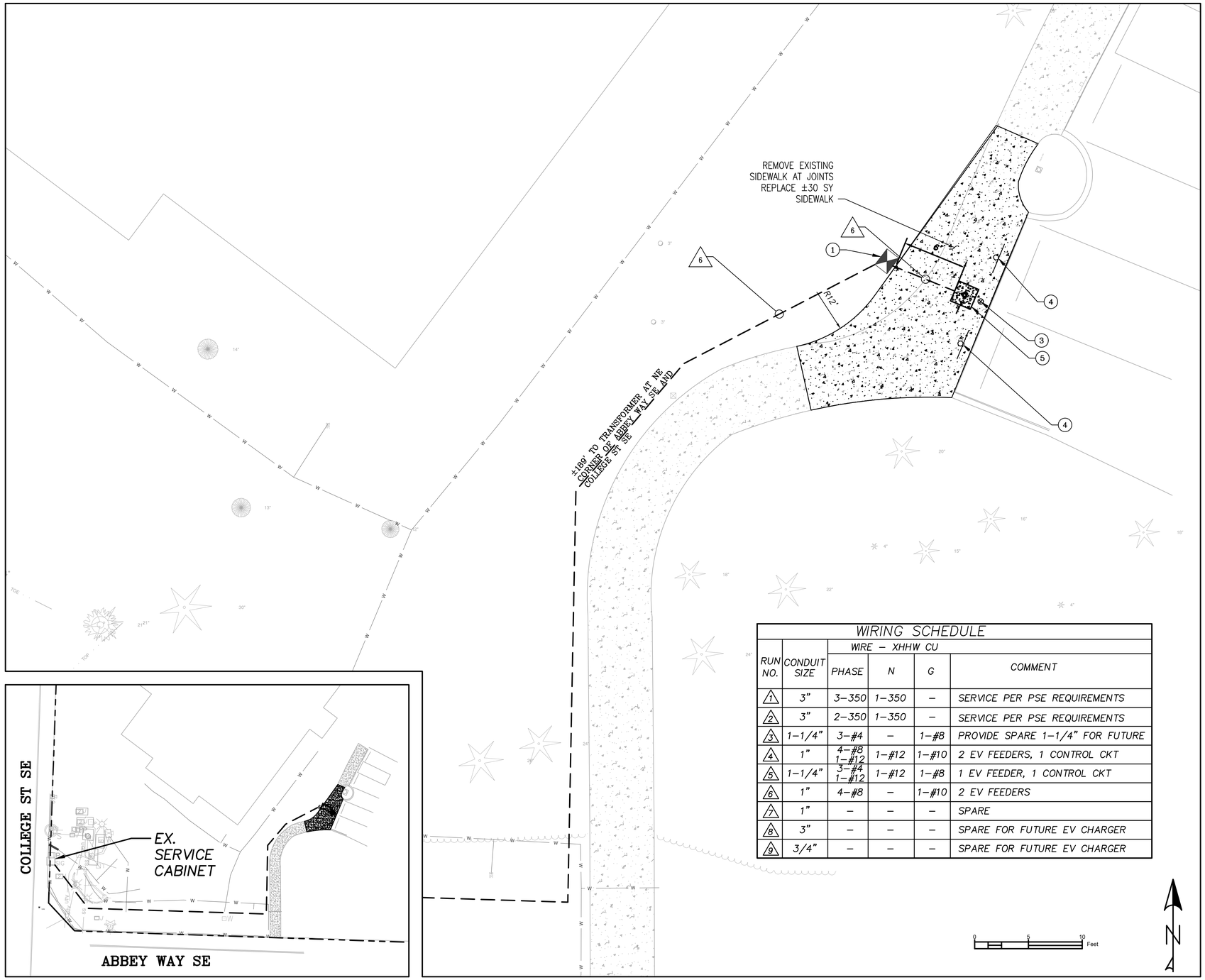

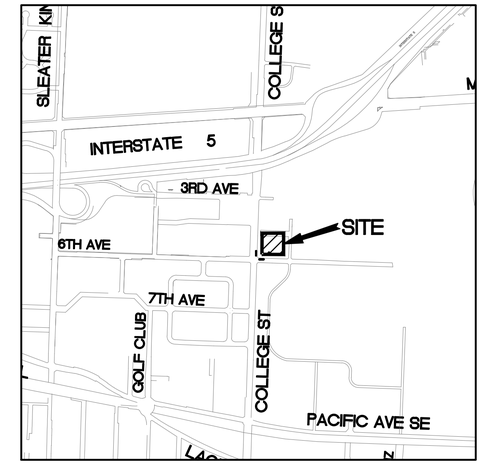

KEY MAP
1"=1000'

WIRING SCHEDULE

RUN NO.	CONDUIT SIZE	WIRE – XHHW CU PHASE	N	G	COMMENT
1	3"	3–350	1–350	–	SERVICE PER PSE REQUIREMENTS
2	3"	2–350	1–350	–	SERVICE PER PSE REQUIREMENTS
3	1–1/4"	3–#4	–	1–#8	PROVIDE SPARE 1–1/4" FOR FUTURE
4	1"	4–#8 1–#12	1–#12	1–#10	2 EV FEEDERS, 1 CONTROL CKT
5	1–1/4"	3–#4 1–#12	1–#12	1–#8	1 EV FEEDER, 1 CONTROL CKT
6	1"	4–#8	–	1–#10	2 EV FEEDERS
7	1"	–	–	–	SPARE
8	3"	–	–	–	SPARE FOR FUTURE EV CHARGER
9	3/4"	–	–	–	SPARE FOR FUTURE EV CHARGER

LEGEND

- TYPE 1 JUNCTION BOX
- TYPE 2 JUNCTION BOX
- TYPE 2 EV CHARGER PAD
- TYPE 3 EV CHARGER
- 120/240V ELECTRICAL SERVICE
- 277/480V ELECTRICAL SERVICE
- TRANSFORMER
- SIGN
- BOLLARD

CONSTRUCTION NOTES

1. INSTALL TYPE 1 JUNCTION BOX, PER WSDOT STANDARD PLAN J–40.10–04.
2. INSTALL TYPE 2 JUNCTION BOX, PER WSDOT STANDARD PLAN J–40.10–04.
3. INSTALL TYPE 2 BOLLARD PER WSDOT STANDARD PLAN H–60.20–01.
4. 24"X24" SIGN D9–11B (ALTERNATE) TO BE INSTALLED BY OTHERS
5. INSTALL 2'x2'x2' CONC. PAD WITH ANCHOR BOLTS AND CONDUIT STUB. SEE DETAIL AND MANUFACTURER'S INSTALLATION INSTRUCTIONS. EV CHARGER TO BE INSTALLED BY OTHERS.
6. INSTALL SINGLE PORT DUAL CONNECTOR TYPE 3 EV CHARGER, CHARGEPOINT CPE250, ON 51"x51"x12" CONC. PAD. SEE MANUFACTURER'S INSTALLATION INSTRUCTIONS.
7. INSTALL 120V/240V 200A METERED SERVICE PEDESTAL WITH 200A DISTRIBUTION PANEL, 18 CKT WITH 200A MAIN. TWO 40A/2 CIRCUIT BREAKERS FOR EV CHARGERS.
8. INSTALL 277/480V 200A METERED SERVICE PEDESTAL WITH 200A DISTRIBUTION PANEL, 18CKT WITH 200A MAIN. SERVICE DISCONNECT AHEAD OF METER. 80A/3 CIRCUIT BREAKER FOR EV CHARGER, AND SPARE 80A/3 FOR FUTURE.
9. INSTALL CONC. EQUIPMENT PAD. SEE DETAIL.
10. NEW VAULT PROVIDED BY PSE. EXCAVATION, BACKFILL, AND RESTORATION PROVIDED BY CONTRACTOR PER PSE REQUIREMENTS. SEE PSE INSTALLATION DRAWING.
11. EXISTING 120/240V SERVICE PEDESTAL. DEMOLISH EXISTING TYPE 1 CHARGER CIRCUITS. PROVIDE FOUR 40A/2 TYPE 2 EV CHARGER CIRCUITS AND ONE 20A/1 CONTROL CIRCUIT.
12. SEE PSE PLAN FOR FULL LAYOUT AND CONTRACTOR RESPONSIBILITIES.

CITY OF LACEY, WASHINGTON
DEPARTMENT OF PUBLIC WORKS
420 COLLEGE STREET S.E.
LACEY, WA 98503–1238 (360) 491–5600

LACEY

Martin Hoppe

Digitally signed by Martin Hoppe
DN: cn=Martin Hoppe, c=US, o=City of Lacey, ou=Public Works, email=mhoppe@ci.lacey.wa.us
Date: 2022.04.29 09:37:07 -07'00'

DESIGNED:	CRS
DRAFTED:	CRS
CHECKED:	MAH
HORZ. SCALE:	1"=5'
VERT. SCALE:	N/A
FILE: EV CHARGERS – SHEETS	

ELECTRIC VEHICLE CHARGERS LIBRARY

REVISION BLOCK

NO.	DATE	DESCRIPTION

DWG NO. D–21–32

SHEET NO. 2 OF 5

K:\Projects\2020\PW 2020–20 EV Charging Stations PSA\Design\04 Design Info\03 AutoCAD Files\EV Chargers – Sheets.dwg, 04–29–22, 8:38am, CStalber, 1

LEGEND

- TYPE 1 JUNCTION BOX
- TYPE 2 JUNCTION BOX
- TYPE 2 EV CHARGER PAD
- TYPE 3 EV CHARGER
- 120/240V ELECTRICAL SERVICE
- 277/480V ELECTRICAL SERVICE
- TRANSFORMER
- SIGN
- BOLLARD

CONSTRUCTION NOTES

1. INSTALL TYPE 1 JUNCTION BOX, PER WSDOT STANDARD PLAN J-40.10-04.
2. INSTALL TYPE 2 JUNCTION BOX, PER WSDOT STANDARD PLAN J-40.10-04.
3. INSTALL TYPE 2 BOLLARD PER WSDOT STANDARD PLAN H-60.20-01.
4. 24"X24" SIGN D9-11B (ALTERNATE) TO BE INSTALLED BY OTHERS
5. INSTALL 2'x2'x2' CONC. PAD WITH ANCHOR BOLTS AND CONDUIT STUB. SEE DETAIL AND MANUFACTURER'S INSTALLATION INSTRUCTIONS. EV CHARGER TO BE INSTALLED BY OTHERS.
6. INSTALL SINGLE PORT DUAL CONNECTOR TYPE 3 EV CHARGER, CHARGEPOINT CPE250, ON 51"x51"x12" CONC. PAD. SEE MANUFACTURER'S INSTALLATION INSTRUCTIONS.
7. INSTALL 120V/240V 200A METERED SERVICE PEDESTAL WITH 200A DISTRIBUTION PANEL, 18 CKT WITH 200A MAIN. TWO 40A/2 CIRCUIT BREAKERS FOR EV CHARGERS.
8. INSTALL 277/480V 200A METERED SERVICE PEDESTAL WITH 200A DISTRIBUTION PANEL, 18CKT WITH 200A MAIN. SERVICE DISCONNECT AHEAD OF METER. 80A/3 CIRCUIT BREAKER FOR EV CHARGER, AND SPARE 80A/3 FOR FUTURE.
9. INSTALL CONC. EQUIPMENT PAD. SEE DETAIL.
10. NEW VAULT PROVIDED BY PSE. EXCAVATION, BACKFILL, AND RESTORATION PROVIDED BY CONTRACTOR PER PSE REQUIREMENTS. SEE PSE INSTALLATION DRAWING.
11. EXISTING 120/240V SERVICE PEDESTAL. DEMOLISH EXISTING TYPE 1 CHARGER CIRCUITS. PROVIDE FOUR 40A/2 TYPE 2 EV CHARGER CIRCUITS AND ONE 20A/1 CONTROL CIRCUIT.
12. SEE PSE PLAN FOR FULL LAYOUT AND CONTRACTOR RESPONSIBILITIES.

N

0 5 10 Feet

WIRING SCHEDULE

RUN NO.	CONDUIT SIZE	WIRE – XHHW CU PHASE	N	G	COMMENT
1	3"	3-350	1-350	–	SERVICE PER PSE REQUIREMENTS
2	3"	2-350	1-350	–	SERVICE PER PSE REQUIREMENTS
3	1-1/4"	3-#4	–	1-#8	PROVIDE SPARE 1-1/4" FOR FUTURE
4	1"	4-#8 1-#12	1-#12	1-#10	2 EV FEEDERS, 1 CONTROL CKT
5	1-1/4"	3-#4 1-#12	1-#12	1-#8	1 EV FEEDER, 1 CONTROL CKT
6	1"	4-#8	–	1-#10	2 EV FEEDERS
7	1"	–	–	–	SPARE
8	3"	–	–	–	SPARE FOR FUTURE EV CHARGER
9	3/4"	–	–	–	SPARE FOR FUTURE EV CHARGER

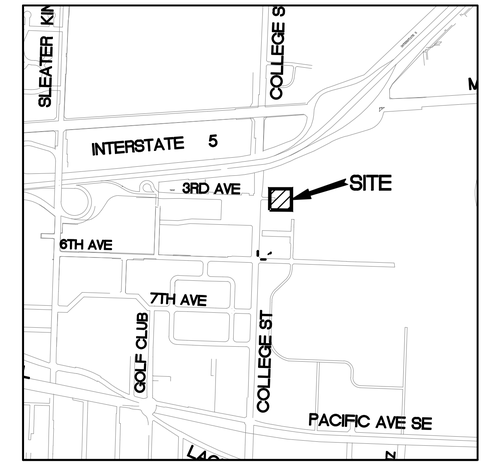

KEY MAP
1"=1000'

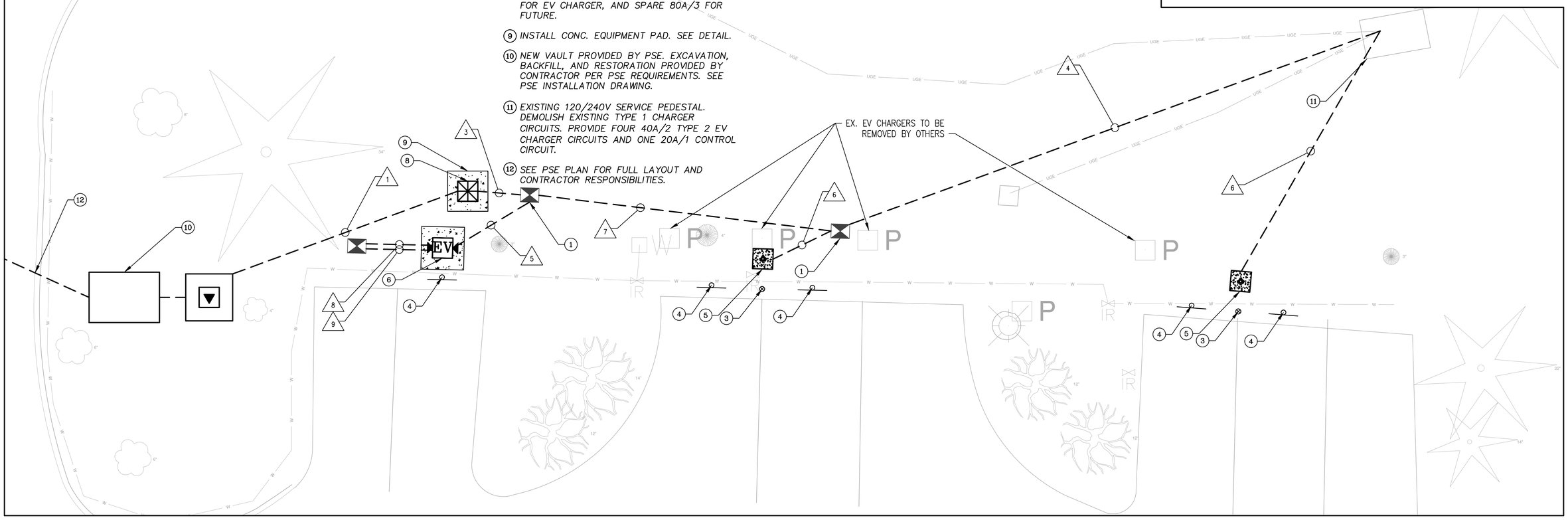

CITY OF LACEY, WASHINGTON
DEPARTMENT OF PUBLIC WORKS
420 COLLEGE STREET S.E.
LACEY, WA 98503-1238 (360) 491-5600

LACEY

Martin Hoppe

Digitally signed by Martin Hoppe
DN: cn=Martin Hoppe, o, ou, email=mhoppe@lacey.wa.us, c=US
Date: 2022.04.29 15:34:34 -07'00'

DESIGNED:	CRS
DRAFTED:	CRS
CHECKED:	MAH
HORZ. SCALE:	1"=5'
VERT. SCALE:	N/A
FILE:	EV CHARGERS - SHEETS

ELECTRIC VEHICLE CHARGERS
CITY HALL

REVISION BLOCK

NO.	DATE	DESCRIPTION

DWG NO. D-21-32

SHEET NO. 3 OF 5

K:\Projects\2020\PW 2020-20 EV Charging Stations PSA\Design\04 Design Info\03 AutoCAD Files\EV Chargers - Sheets.dwg, 04-29-22, 8:38am, CStolber, 1

LEGEND

- TYPE 1 JUNCTION BOX
- TYPE 2 JUNCTION BOX
- TYPE 2 EV CHARGER PAD
- TYPE 3 EV CHARGER
- 120/240V ELECTRICAL SERVICE
- 277/480V ELECTRICAL SERVICE
- TRANSFORMER
- SIGN
- BOLLARD

0 5 10 Feet

WIRING SCHEDULE

RUN NO.	CONDUIT SIZE	WIRE – XHHW CU PHASE	N	G	COMMENT
1	3"	3–350	1–350	–	SERVICE PER PSE REQUIREMENTS
2	3"	2–350	1–350	–	SERVICE PER PSE REQUIREMENTS
3	1–1/4"	3–#4	–	1–#8	PROVIDE SPARE 1–1/4" FOR FUTURE
4	1"	4–#8 1–#12	1–#12	1–#10	2 EV FEEDERS, 1 CONTROL CKT
5	1–1/4"	3–#4 1–#12	1–#12	1–#8	1 EV FEEDER, 1 CONTROL CKT
6	1"	4–#8	–	1–#10	2 EV FEEDERS
7	1"	–	–	–	SPARE
8	3"	–	–	–	SPARE FOR FUTURE EV CHARGER
9	3/4"	–	–	–	SPARE FOR FUTURE EV CHARGER

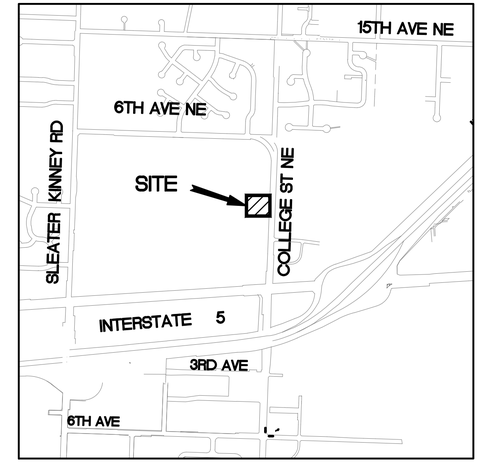

KEY MAP
1"=1000'

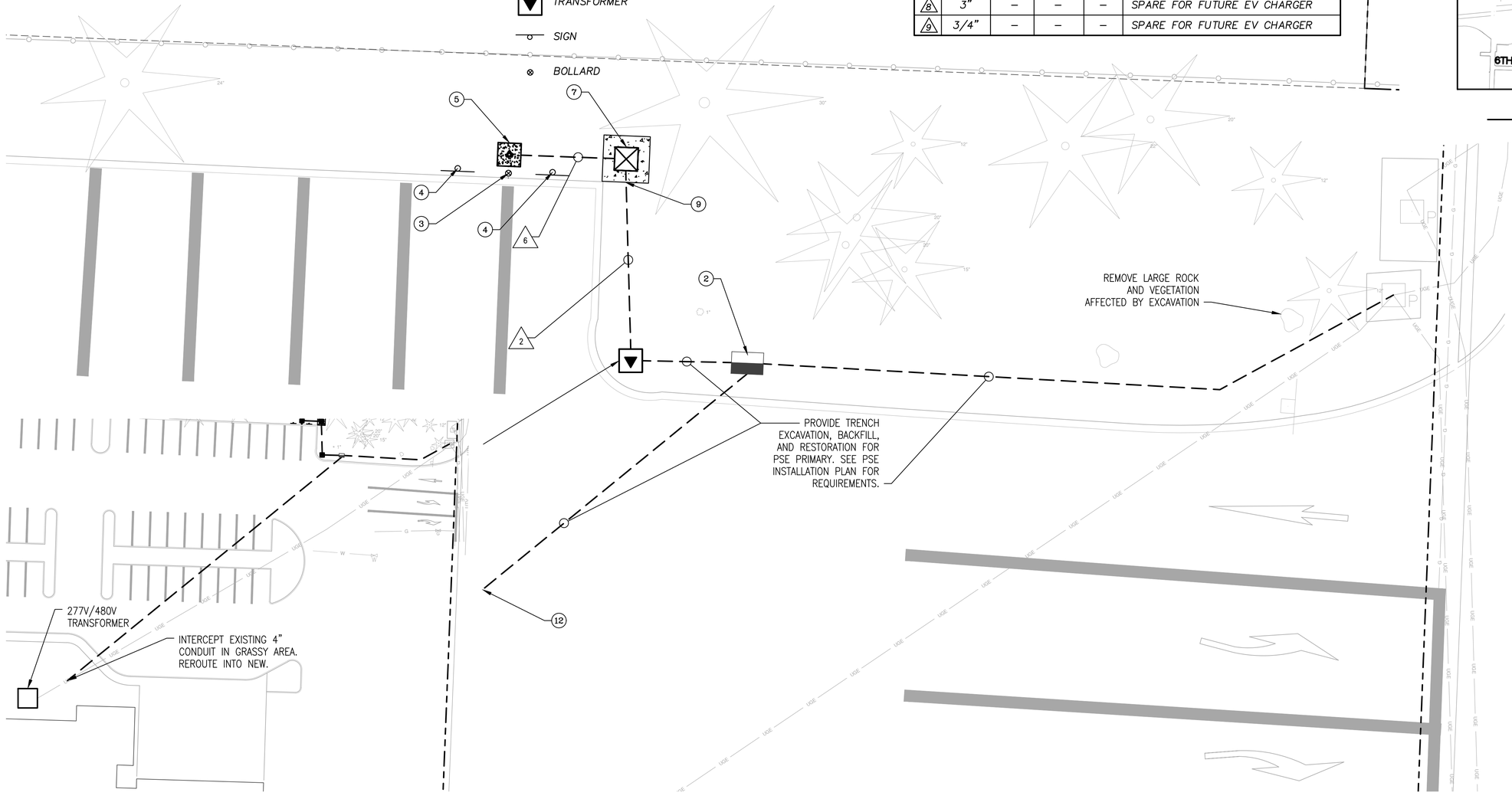

CONSTRUCTION NOTES

1. INSTALL TYPE 1 JUNCTION BOX, PER WSDOT STANDARD PLAN J–40.10–04.
2. INSTALL TYPE 2 JUNCTION BOX, PER WSDOT STANDARD PLAN J–40.10–04.
3. INSTALL TYPE 2 BOLLARD PER WSDOT STANDARD PLAN H–60.20–01.
4. 24"X24" SIGN D9–11B (ALTERNATE) TO BE INSTALLED BY OTHERS
5. INSTALL 2'x2'x2' CONC. PAD WITH ANCHOR BOLTS AND CONDUIT STUB. SEE DETAIL AND MANUFACTURER'S INSTALLATION INSTRUCTIONS. EV CHARGER TO BE INSTALLED BY OTHERS.
6. INSTALL SINGLE PORT DUAL CONNECTOR TYPE 3 EV CHARGER, CHARGEPOINT CPE250, ON 51"x51"x12" CONC. PAD. SEE MANUFACTURER'S INSTALLATION INSTRUCTIONS.
7. INSTALL 120V/240V 200A METERED SERVICE PEDESTAL WITH 200A DISTRIBUTION PANEL, 18 CKT WITH 200A MAIN. TWO 40A/2 CIRCUIT BREAKERS FOR EV CHARGERS.
8. INSTALL 277/480V 200A METERED SERVICE PEDESTAL WITH 200A DISTRIBUTION PANEL, 18CKT WITH 200A MAIN. SERVICE DISCONNECT AHEAD OF METER. 80A/3 CIRCUIT BREAKER FOR EV CHARGER, AND SPARE 80A/3 FOR FUTURE.
9. INSTALL CONC. EQUIPMENT PAD. SEE DETAIL.
10. NEW VAULT PROVIDED BY PSE. EXCAVATION, BACKFILL, AND RESTORATION PROVIDED BY CONTRACTOR PER PSE REQUIREMENTS. SEE PSE INSTALLATION DRAWING.
11. EXISTING 120/240V SERVICE PEDESTAL. DEMOLISH EXISTING TYPE 1 CHARGER CIRCUITS. PROVIDE FOUR 40A/2 TYPE 2 EV CHARGER CIRCUITS AND ONE 20A/1 CONTROL CIRCUIT.
12. SEE PSE PLAN FOR FULL LAYOUT AND CONTRACTOR RESPONSIBILITIES.

CITY OF LACEY, WASHINGTON
DEPARTMENT OF PUBLIC WORKS
420 COLLEGE STREET S.E.
LACEY, WA 98503–1238 (360) 491–5600
LACEY

Martin Hoppe

Digitally signed by Martin Hoppe
DN: cn=Martin Hoppe, o=ce, ou=lacey.wa.us, email=mhoppe@lacey.wa.us, c=US
Date: 2022.04.29 07:07:00 -07'00'

DESIGNED:	CRS
DRAFTED:	CRS
CHECKED:	MAH
HORZ. SCALE:	1"=5'
VERT. SCALE:	N/A
FILE: EV CHARGERS – SHEETS	

ELECTRIC VEHICLE CHARGERS
SCHOOL DISTRICT OFFICE

REVISION BLOCK

NO.	DATE	DESCRIPTION

DWG NO. D–21–32

SHEET NO. 4 OF 5

K:\Projects\2020\PW 2020–20 EV Charging Stations PSA\Design\04 Design Info\03 AutoCAD Files\EV Chargers – Sheets.dwg, 04–29–22, 8:40am, CStalber, 1

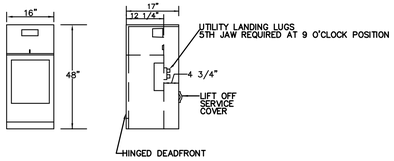

MILLBANK WEST
CP3B-12615A-ALSP2
OR APPROVED EQUAL

THE UNIT SHALL CONTAIN THE FOLLOWING ADDITIONAL EQUIPMENT:
200A DISTRIBUTION PANEL
200A MAIN
18 CKT

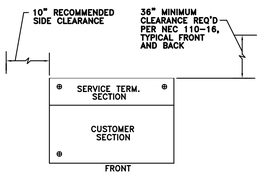

FLOOR PLAN

SPECIFICATIONS

1. STANDARD VOLTAGE IS 120/240V; 200 AMP
2. CALTRANS TYPE 3B SERVICE OR U.L. APPROVED EQUAL.
3. TYPE 3R RAINPROOF ENCLOSURE
4. NATURAL ALUMINUM CONSTRUCTION.
5. INTERIORS WILL ACCEPT PLUG-IN BREAKERS (BRYANT, G.E., WESTINGHOUSE, ITE, CROUSE-HINDS)
6. SERVICE CABINET SHALL COMPLY WITH ALL CURRENT PSE REQUIREMENTS.

120/240V SERVICE CABINET

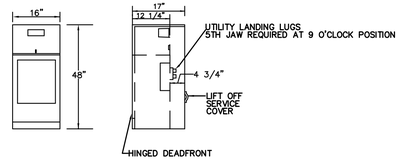

MILLBANK WEST
CP3B-12615A-ALSP2
OR APPROVED EQUAL

THE UNIT SHALL CONTAIN THE FOLLOWING ADDITIONAL EQUIPMENT:
TWO MERCURY RELAYS (DPST)
ONE 2 POSITION TEST SWITCH
ONE PHOTOCELL

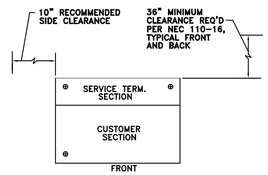

FLOOR PLAN

SPECIFICATIONS

1. STANDARD VOLTAGE IS 120/240V; 200 AMP
2. CALTRANS TYPE 3B SERVICE OR U.L. APPROVED EQUAL.
3. TYPE 3R RAINPROOF ENCLOSURE
4. NATURAL ALUMINUM CONSTRUCTION.
5. INTERIORS WILL ACCEPT PLUG-IN BREAKERS (BRYANT, G.E., WESTINGHOUSE, ITE, CROUSE-HINDS)
6. SERVICE CABINET SHALL COMPLY WITH ALL CURRENT PSE REQUIREMENTS.

480V SERVICE CABINET

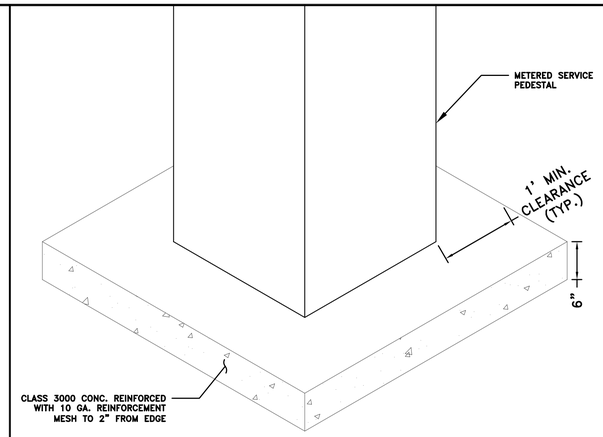

CONC. EQUIPMENT PAD

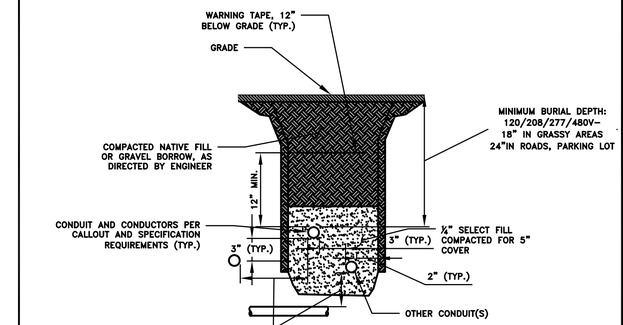

TRENCH DETAIL

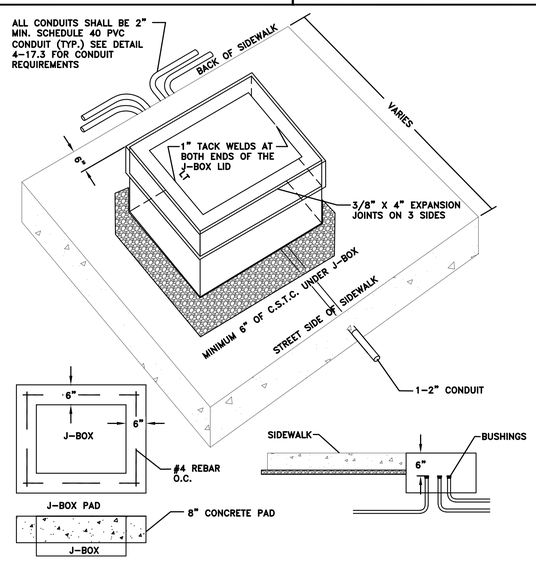

GENERAL NOTES:
1. SEE W.S.D.O.T. STANDARD PLAN J-40.10-04 FOR J-BOX TYPE AND SIZE.
2. ALL LIDS SHALL BE STEEL AND MARKED WITH LT OR TS PER W.S.D.O.T. STANDARD PLAN J-40.10-04.
3. IF NO SIDEWALK EXISTS, A CONCRETE PAD SHALL BE CONSTRUCTED 8" THICK, 6" WIDE, COMPLETELY SURROUNDING THE J-BOX WITH ONE #4 REBAR ON CENTER EACH SIDE AND TIED AT CORNERS.
4. CONDUIT RUNS SHALL NOT EXCEED 200 FEET BETWEEN JUNCTION BOXES.
5. SPARE 2" CONDUIT REQUIRED ON ARTERIALS, COLLECTORS AND RESIDENTIAL STREETS.

J-BOX LOCATION

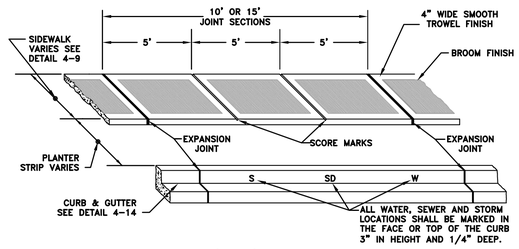

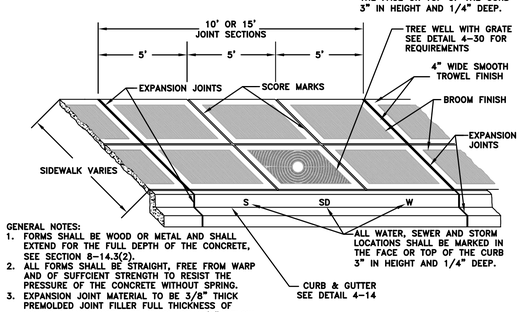

GENERAL NOTES:
1. FORMS SHALL BE WOOD OR METAL AND SHALL EXTEND FOR THE FULL DEPTH OF THE CONCRETE, SEE SECTION 8-14.3(2).
2. ALL FORMS SHALL BE STRAIGHT, FREE FROM WARP AND OF SUFFCIENT STRENGTH TO RESIST THE PRESSURE OF THE CONCRETE WITHOUT SPRING.
3. EXPANSION JOINT MATERIAL TO BE 3/8" THICK PREMOLDED JOINT FILLER FULL THICKNESS OF CONCRETE AND INSTALLED FLUSH OR 1/4" BELOW FINISH GRADE.
4. FORM AND SUBGRADE INSPECTION ARE REQUIRED BEFORE POURING CONCRETE.
5. PLACEMENT OF STREET LIGHTING, TREES, HYDRANTS AND WATER METERS SHALL BE PER THE DETAILS OF ITS PERSPECTIVE SECTIONS.
6. SCORE MARKS SHALL BE 1/8" TO 1/4" WIDE AND A MINIMUM OF 1" DEEP.
7. EXPANSION JOINTS SHALL BE INSTALLED IN THE CURB & GUTTER AND SIDEWALK AT THE PC AND PT FOR ALL CURB RETURNS. EXPANSION JOINTS SHALL BE PLACED IN THE SIDEWALK AT THE SAME LOCATIONS AS THOSE IN THE CURB & GUTTER WHEN THE SIDEWALK IS ADJACENT TO CURB & GUTTER, OR UNLESS OTHERWISE DIRECTED BY THE CITY.

DG4-10.DWG

SIDEWALK SPACING
EXPANSION JOINTS & SCORE MARKS

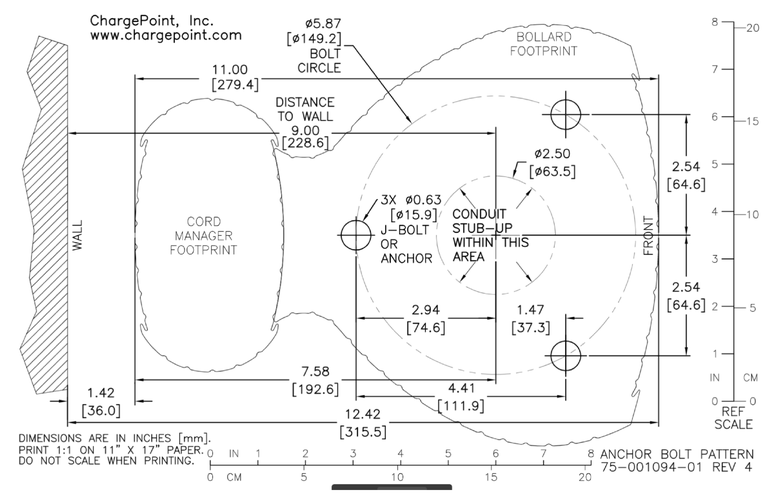

ANCHOR BOLT TEMPLATE FOR TYPE II CHARGER FOUNDATIONS

CITY OF LACEY, WASHINGTON
DEPARTMENT OF PUBLIC WORKS
420 COLLEGE STREET S.E.
LACEY, WA 98503-1238 (360) 491-5600

LACEY

Martin Hoppe

Digitally signed by Martin Hoppe
DN: cn=Martin Hoppe, o, ou, email=mhoppe@lacey.wa.us, c=US
Date: 2022.04.29 09:09:09 -07'00'

DESIGNED:	CRS
DRAFTED:	CRS
CHECKED:	MAH
HORZ. SCALE:	N/A
VERT. SCALE:	N/A
FILE: EV CHARGERS - SHEETS	

ELECTRIC VEHICLE CHARGERS DETAILS

REVISION BLOCK

NO.	DATE	DESCRIPTION

DWG NO. D-21-32

SHEET NO. 5 OF 5

K:\Projects\2020\PW 2020-20 EV Charging Stations PSA\Design\04 Design Info\03 AutoCAD Files\EV Chargers - Sheets.dwg, 04-29-22, 8:40am, CStolber, 1