2022 SIDEWALK REPAIR

LACEY PROJECT NUMBER PW 2022-15

SPECIFICATIONS AND BID DOCUMENTS
DEPARTMENT OF PUBLIC WORKS

LACEY PROJECT NUMBER PW 2022-15

CITY OF LACEY
WASHINGTON

CITY OFFICIALS

MAYOR	**ANDY RYDER**
DEPUTY MAYOR	**MALCOLM MILLER**
COUNCIL MEMBERS	**LENNY GREENSTEIN**
	MICHAEL STEADMAN
	CAROLYN COX
	ED KUNKEL
	ROBIN VAZQUEZ
CITY MANAGER	**SCOTT H. SPENCE**
CITY ATTORNEY	**DAVID S. SCHNEIDER**
DIRECTOR OF PUBLIC WORKS	**SCOTT EGGER, P.E.**
CITY ENGINEER	**ROGER SCHOESSEL, P.E.**

ASHLEY SMITH
STATE OF WASHINGTON
2013319
REGISTERED
PROFESSIONAL ENGINEER
6/7/22

Scott Egger, PE

TABLE OF CONTENTS

Advertisement for Bids i

INSTRUCTIONS

Instructions to Bidders A-1
Bidder's Checklist A-2

BID DOCUMENTS

Proposal & Bid Sheet B-1
Bid Bond Form B-4
Non-Collusion Certificate B-6
Certification of Compliance with Wage Payment Statutes B-7

CONTRACT DOCUMENTS

Construction Contract C-1
Performance Bond Form C-4
Declaration of Option for Management of Statutory Retained Percentage. C-6

AMENDMENTS AND SPECIAL PROVISIONS

Table of Contents ii
Special Provisions D-1

STANDARD DETAILS

Sidewalk Dwg. 4-9 ..... E-1
Cement Concrete Driveway Dwg. 4-7 ..... E-2
Tree Planter and Barrier in Planter Strip Dwg. 4-29 ..... E-3
DWG. No. 4-30 Tree Well and Grate E-4

SITE PHOTOS

Photos of Potential Conflicts F-1

PREVAILING MINIMUM HOURLY RATES

State Wage Rates G-1

ADVERTISEMENT FOR BIDS

2022 SIDEWALK REPAIR

NOTICE IS HEREBY GIVEN that sealed bids will be received by the City of Lacey at City Hall, Lacey, Washington until 2:30 p.m., June 23rd, 2022, at which time bids will be publicly opened via a live video stream. Links to the YouTube live video stream can be found at https://cityoflacey.org/rfp-rfq-rfi/ under the specific project section and on the specific project page on the Builders Exchange website located at http://bxwa.com/bxwa_toc/pub/2080/toc.html for the following work:

This contract provides for the removal of tree stumps, installation of root barrier, replacement of topsoil to grade, removal and replacement of traffic curb, sidewalk and driveway entrances, and other work as outlined in bid documents.

Each bid must be accompanied by a certified check for five percent of the amount of the proposal made payable to the City Treasurer, or an approved bid bond for five percent of the amount of the proposal executed on the approved form attached to these specifications. If bid bond is used, the five percent may be shown in dollars and cents or the form may be filled in by inserting therein, in lieu thereof, "five percent of the amount of the accompanying proposal". Check of unsuccessful bidders will be returned immediately upon award of contract.

The City Council reserves the right to reject any and all bids and to waive all informalities.

Plans, Specifications, and Addenda for this project are available through the "City of Lacey" on-line plan room. Free of charge access is provided by going to http://bxwa.com and clicking on: "Posted Projects", "Public Works", "City of Lacey", and "Projects Bidding". Bidders are asked to "Register" in order to receive automatic email notification of future addenda and to be placed on the "Bidders List". Any questions regarding this contract can be directed to Brett Boogerd, at (360) 486-8732.

The range for this project is $315,000 to $525,000.

for

Peri Edmonds, City Clerk
City of Lacey, Washington

Publish: **6/8/2022**
6/15/2022

A
INSTRUCTIONS

INSTRUCTIONS TO BIDDERS

Bidders shall examine contract and bid documents and the site and shall satisfy themselves as to conditions that exist.

Each Bidder shall submit to the City Clerk, Lacey, Washington a sealed bid endorsed upon the outside wrapper with **2022 Sidewalk Repair** at the time and place designated in the advertisement.

Bids may be delivered in person to Lacey City Hall, 420 College Street SE, or by mail to City of Lacey 420 College St SE Lacey, WA 98503.

Bids will be publicly opened via a live video stream. Links to the YouTube live video stream can be found at https://cityoflacey.org/rfp-rfq-rfi/ under the specific project section and on the specific project page on the Builders Exchange website.

The City of Lacey is committed to offering reasonable accommodations to persons with disabilities. We invite any person with special needs to contact the City Clerk at (360) 491-3212 at least seventy-two (72) hours before the meeting to discuss any special accommodations that may be necessary. Citizens with hearing impairment may call the TDD line at (800) 833-6388.

Each Bidder shall complete the proposal with prices in figures with the extension properly computed. The proposal must be properly signed by a duly authorized agent. Proposal must acknowledge addenda, if any, received.

If alternates are included in the proposal the Bidder shall complete the alternates. The City will award the contract to the lowest responsible Bidder as determined by the Special Provisions. The City reserves the right to delete alternates after award.

Each bid shall include properly executed bid surety as outlined in the Advertisement and the Proposal.

Each Proposal must be accompanied by a signed Affidavit of Non-Collusion.

The City does not pre-qualify Bidders. However, if the apparent low Bidder has not already been determined qualified, the City shall afford seven (7) days after notification for the low Bidder to provide evidence for evaluation, as to capability to perform the work. The evaluation will include consideration of experience, personnel, equipment, financial resources as well as performance record. The information must be sufficient to enable the Bidder to obtain the required qualification rating prior to the award of the contract.

No bidder may withdraw his bid after the hour set for the opening of bids or before award of the contract unless said award is delayed for a period of forty-five (45) days.

CONTRACT PARTS

The contract to be executed as a result of this bid consists of multiple parts, all of which pertain as if fully attached hereto and Bidder shall consider all parts as a complete document. In the event of discrepancies between the various parts, precedent shall be in the following order:

1. Contract Form,
2. Addenda (if any),
3. Proposal Form,
4. Special Provisions,
5. Technical Specifications, if included,
6. Contract Plans,
7. WSDOT Standard Specifications for Road, Bridge, and Municipal Construction,
8. City of Lacey Development Guidelines and Public Works Standards, and
9. WSDOT Standard Plans for Road, Bridge and Municipal Construction

- The Bidder is directed to complete and return the forms in Section B as a bid proposal.

BIDDER'S CHECKLIST

The bidder's attention is especially called to the following forms which must be executed in full as required, and submitted with the bid proposal:

1. Proposal: The unit prices bid must be shown in the space provided.
2. Proposal Signature Sheet: To be filled in and signed by the bidder. All addenda must be acknowledged.
3. Bid Deposit: Any bid shall be accompanied by a deposit of cash, certified check, cashier's check, or surety bond, in an amount equal to at least five percent (5%) of the total amount bid. Checks shall be payable to the City Clerk, City of Lacey, Washington.

   If a surety bond is used, it shall be submitted on a form furnished by the Commission and signed by the bidder and his surety company. The sureties' "attorney-in-fact" must be registered with the Washington State Insurance Commissioner. The power of attorney must also be submitted with the bond. See Specification section 1-02.7 for more information.
4. Non-Collusion and Debarment Affidavit

The following form must be submitted within 24 hours following the bid submittal deadlines.

5. Certification of Compliance with Wage Payment Statutes

The following must be completed before the contract can be awarded:

6. L&I training on the requirements related to public works and prevailing wages per RCW 39.04.350

The following forms are to be executed after the contract is awarded:

7. Contract: This agreement to be executed by the successful bidder
8. Performance and Payment Bond
9. Insurance Certificate

Bidder's Checklist

1.	Proposal	
2.	Proposal Signature Sheet	
	Addenda Acknowledged	
3.	Bid Deposit	
	Power of Attorney included if applicable	
4.	Non-Collusion and Debarment Affidavit	
5.	Certification of Compliance with Wage Payment Statutes	
6.	L&I Public Works Prevailing Wage Training	

B
BID DOCUMENTS

CITY OF LACEY

2022 Sidewalk Repair

Willows Crossing, Parkside, 6th, Sleater Kinney

Lacey Contract Number: PW 2022-15

Federal Aid Project Number:

WSDOT Contract Number:

TIB Contract Number:

Contract Proposal

DATE: _____

The undersigned, as bidder, has examined the bid documents as prepared by the Public Works Department, City of Lacey.

The undersigned, as bidder, proposes to furnish all material and perform all labor in accordance with the bid documents at the following prices.

Bidder must fill in unit prices in figures for each item and total.

Bidder shall sign this proposal form and submit all required paperwork with the bid.

A Roadway - Base Bid

No.	Quantity	Unit	Item ID	Item Description	Unit Price	Extended Price
A1	5000	MC	104-010	Minor Change	$1.00	$5,000.00
A2	1	LS	109-010	Mobilization	LUMP SUM	
A3	1	LS	850-792	Project Closeout	$1,000.00	$1,000.00

Schedule A Subtotal: _____

Tax Rate (%) : 0.00 Tax: $0.00

Schedule A Total: _____

B Roadway - Willows Crossing

No.	Quantity	Unit	Item ID	Item Description	Unit Price	Extended Price
B1	1	LS	110-010	Project Temporary Traffic Control	LUMP SUM	
B2	90	EA	201-550	Tree Root Pruning		
B3	1	LS	805-510	Lawn and Landscape Restoration	LUMP SUM	
B4	1256	SY	814-510	Cement Conc. Sidewalk		

Schedule B Subtotal: _____

Tax Rate (%) : 0.00 Tax: $0.00

Schedule B Total: _____

C Roadway - 6th Ave SE

No.	Quantity	Unit	Item ID	Item Description	Unit Price	Extended Price
C1	1	LS	110-010	Project Temporary Traffic Control	LUMP SUM	

C2	3	EA	201-550	Tree Root Pruning		
C3	1	LS	805-510	Lawn and Landscape Restoration	LUMP SUM	
C4	142	SY	814-510	Cement Conc. Sidewalk		

Schedule C Subtotal:

Tax Rate (%) : 0.00 Tax: $0.00

Schedule C Total:

D Roadway - Parkside Dr

No.	Quantity	Unit	Item ID	Item Description	Unit Price	Extended Price
D1	1	LS	110-010	Project Temporary Traffic Control	LUMP SUM	
D2	26	EA	201-550	Tree Root Pruning		
D3	6	EA	715-910	Adjust Water Meter		
D4	1	LS	805-510	Lawn and Landscape Restoration	LUMP SUM	
D5	641	SY	814-510	Cement Conc. Sidewalk		

Schedule D Subtotal:

Tax Rate (%) : 0.00 Tax: $0.00

Schedule D Total:

E Roadway - Sleater Kinney Rd SE

No.	Quantity	Unit	Item ID	Item Description	Unit Price	Extended Price
E1	1	LS	110-010	Project Temporary Traffic Control	LUMP SUM	
E2	1	LS	805-510	Lawn and Landscape Restoration	LUMP SUM	
E3	25	SY	814-510	Cement Conc. Sidewalk		

Schedule E Subtotal:

Tax Rate (%) : 0.00 Tax: $0.00

Schedule E Total:

Contract Total:
(All Schedules)

The undersigned also agrees as follows:

- Within 10 calendar days after the contract is awarded to sign and return the contract and provide insurance documents.
- That this proposal cannot be withdrawn within 45 days after receipt of bids.
- That it is the understanding that the City of Lacey may accept or reject any or all bids.
- The undersigned hereby agrees to pay for labor not less than the prevailing rates of wages per the bid documents.
- Enclosed with this proposal is a bid deposit in the sum of 5% of the bid total amount which it is agreed shall be collected and retained by the City of Lacey as liquidated damages in the event this proposal is accepted by the City of Lacey with 45 calendar days after the receipt of bids and the undersigned fails to execute the contract and the required bond with the City of Lacey, under the conditions thereof, within 10 calendar days after the undersigned is notified that said proposal has been accepted, otherwise said bid deposit shall be returned to the undersigned upon demand.
- A Performance/Payment Bond will be furnished to the City with the contract.
- Retention will be held on this contract per RCW 60.28.011.

Addenda Receipt Acknowledged

_____,_____,_____

_____ _____

Signature of Bidder Date

(If an Individual, Partnership, or Non-Incorporated organization)

_____ _____

Firm Name Please Print Phone

Address of Bidder: _____

_____

Name and Address of Firm Members:

_____

_____

_____

_____

Signature of Bidder (if a Corporation)

Title: _____

Firm Name: _____ Phone: _____

Business Address: _____

Incorporated under the Laws of the State of _____

Officers Address

President: _____ _____

Secretary: _____ _____

Treasurer: _____ _____

BID DEPOSIT SELECTION

A bid deposit in an amount of five percent (5%) of the total bid amount is attached hereto:

CASH	☐	In the amount of _____
CASHIER'S CHECK	☐	In the amount of _____
CERTIFIED CHECK	☐	In the amount of _____
BID BOND	☐	In the amount of 5% of the total bid amount

CONTRACTOR'S BID DEPOSIT SURETY BOND
to City of Lacey, Washington

We,_____ , as Principal, existing under and by virtue of the laws of the State of Washington and authorized to do business in the State of Washington, and _____, as Surety, organized and existing under the laws of the State of _____ , are held and firmly bound unto the City of Lacey, a Washington municipality, as Obligee, in the penal sum of 5% of the total amount bid, not to exceed $_____ , for the payment of which we jointly and severally bind ourselves, and our legal representatives and successors.

WHEREAS, the Principal has submitted a bid for 2022 Sidewalk Repair.

NOW THEREFORE, the condition of the obligation is such that if the Obligee shall accept the bid of Principal and make timely award to the Principal according to the terms of the bid documents; and the Principal shall, within ten days after notice of the award, exclusive of the day of notice, enter into the contract with the Obligee and furnish the contractor's bonds (performance and payment bonds) with Surety satisfactory to the Obligee in an amount equal to 100% of the amount of the bid proposed including additives, alternatives and Washington State sales tax, then this obligation shall be null and void; otherwise if the Principal fails to enter into the contract and fails to furnish the contractor's bonds within ten days of notice of award, exclusive of the day of notice, the amount of the bid deposit shall be forfeited to the Obligee, payable by the Surety; but in no event will the Surety's liability exceed the face amount of this bid bond.

This bond may be executed in two original counterparts, and shall be signed by the parties' duly authorized officers. This bond will only be accepted if it is accompanied by a fully executed and original power of attorney for the officer executing on behalf of the surety.

PRINCIPAL (CONTRACTOR)	SURETY
_____	_____
Principal Signature Date	Surety Signature Date
_____	_____
Printed Name	Printed Name
_____	_____
Title	Title

Name, address, and telephone of local office/agent of Surety Company is:

_____

_____

NON-COLLUSION AND DEBARMENT AFFIDAVIT

State of)

)ss

County of)

I, the undersigned, being duly sworn, deposes and says that the person, firm, association, copartnership or corporation herein named, has not either directly or indirectly, entered into any agreement, participated in any collusion, or otherwise taken any action in restraint of free competitive bidding in the preparation and submission of a proposal of the City of Lacey for consideration in the award of a contract on the improvement described as follows.

I further certify that, except as noted below, the firm, association or corporation or any person in a controlling capacity associated therewith or any position involving the administration of State or federal funds; is not currently under suspension, debarment, voluntary exclusion, or determination of ineligibility by any federal or State agency; has not been suspended, debarred, voluntarily excluded or determined ineligible by any federal or State agency within the past three years; does not have a proposed debarment pending; and has not been indicted, convicted, or had a civil judgment rendered against said person, firm, association or corporation by a court of competent jurisdiction in any matter involving fraud or official misconduct within the past three years.

I further acknowledge that by signing my signature, I am deemed to have signed and have agreed to the provisions of this affidavit.

_____

Name of Project

_____

Name of Firm

_____

Signature of Authorized Member

Sworn to before me this

_____ day of _____ ,20 _____

_____

Notary Public

(CORPORATE SEAL)

CERTIFICATION OF COMPLIANCE WITH WAGE PAYMENT STATUTES

The bidder hereby certifies that, within the three-year period immediately preceding the bid solicitation date, the bidder is not a "willful" violator, as defined in RCW 49.48.082, of any provision of chapters 49.46, 49.48, or 49.52 RCW, as determined by a final and binding citation and notice of assessment issued by the Department of Labor and Industries or through a civil judgment entered by a court of limited or general jurisdiction.

I certify under penalty of perjury under the laws of the State of Washington that the foregoing is true and correct.

_____
Bidder's Business Name

_____
Signature of Authorized Official*

_____
Printed Name

_____
Title

_____ _____ _____
Date City State

Check One:

Sole Proprietorship ☐ Partnership ☐ Joint Venture ☐ Corporation ☐

State of Incorporation, or if not a corporation, State where business entity was formed:

_____

If a co-partnership, give firm name under which business is transacted:

_____

** If a corporation, proposal must be executed in the corporate name by the president or vice-president (or any other corporate officer accompanied by evidence of authority to sign). If a co-partnership, proposal must be executed by a partner.*

This form must be submitted with the Bid Proposal or as a Supplement to the Bid no later than 24 hours after the time for delivery of the Bid Proposal, as provided for in Section 1-02.9 of the Contract Provisions.

C

CONTRACT DOCUMENTS

Contract Number PW _____

CONSTRUCTION CONTRACT

THIS AGREEMENT, made and entered into this _____ day of _____, 20_____ , between the City of Lacey, hereinafter called Owner, under and by virtue of the charter, laws and ordinances of the said Owner and the laws of the State of Washington, and _____ hereinafter called Contractor,

WITNESSETH:

That in consideration of the payment, covenants and agreement hereinafter mentioned, attached and made a part of this Agreement, to be made and performed by the parties hereto, the parties covenant and agree as follows regarding:

1. The Contractor shall do all work and furnish all tools, materials and equipment in accordance with and as described in the attached Plans and Specifications, and in full compliance with the terms, conditions and stipulations herein set forth and attached, now referred to and by such reference incorporated herein and made a part hereof as fully for all purposes as if here set forth at length, and shall perform any alterations in or in addition to the work covered by this Contract and every part thereof and any force account work which may be ordered as provided in this Contract and every part thereof.

   The Contractor shall provide and bear the expense of all materials, labor, equipment, tools, implements and conveniences and things of every description that may be requisite for the transfer of materials and for constructing and completing the work provided for in this Contract and every part thereof, except such as are mentioned in the Specifications to be furnished by the Owner.

2. The Owner hereby promises and agrees with the Contractor to employ, and does employ the Contractor to provide the materials and to do and cause to be done the above described work and to complete and finish the same according to the attached Plans and Specifications and the schedule of unit or itemized prices hereto attached, at the time and in the manner and upon the conditions provided for in this Contract and every part thereof.

3. Contractor, for himself and for his heirs, executors, administrators, successors, assigns, does hereby agree to the full performance of all the covenants herein contained upon the part of Contractor.

4. It is further provided that no liability shall attach to Owner or Agent thereof by reason of entering into this Contract, except as expressly provided herein.

5. Payments will be made under the Contract according to the schedule of rates and prices and the specification attached and made a part thereof. Partial payments under the Contract will be made at the request of the Contractor not more than once each month upon approval of the Owner, as hereinafter specified, provided they are in accordance with the provisions of RCW 60.28.010. There will be reserved and retained from monies

earned by the Contractor, as determined by such monthly estimates, a sum equal to 5 percent of the Contract price.

Payment of the retained percentage shall be withheld for a period of forty-five (45) days following the final acceptance of the work and materials by the Owner, and shall be paid the Contractor at the expiration of said forty-five (45) days in event no claims, as provided by law, have been filed against such funds; and provided further, that releases have been obtained from all departments and agencies having jurisdiction over the activities of the Contractor. In the event such claims are filed, Contractor shall be paid such retained percentages less an amount sufficient to pay any such claims together with a sum sufficient to pay the cost of such action, and to cover attorney fees as determined by the Owner.

6. Requests for review of substitute items of material or equipment will not be accepted by the Owner or Agent from anyone other than the Contractor. If the Contractor wishes to furnish a substitute item, the Contractor shall make written application to the Owner's Agent for acceptance thereof, certifying that the proposed substitute will perform adequately the functions called for by the general design, be similar and of equal substance to that specified and be suited to the same use and capable of performing the same function as that specified. All variations of the proposed substitute from that specified shall be identified in the application and available maintenance, repair and replacement service will be indicated. The application will also contain an itemized estimate of all costs that will result directly or indirectly from acceptance of such substitute, which shall be considered by the Owner in evaluating the proposed substitute. The Owner may require the Contractor to furnish at the Contractor's expense, additional data about the proposed substitute. The Owner will be the sole judge of acceptability, and no substitute will be ordered without the Owner's prior written acceptance. The Owner may require the Contractor to furnish at the Contractor's expense, a special performance guarantee or other surety with respect to any other substitute.

   The Owner or Agent will record the time and expenses in evaluating substitutions proposed by the Contractor. Whether or not the Owner accepts a proposed substitute, the Contractor shall reimburse the Owner for the costs of evaluating any proposed substitute.

7. The Owner reserves the right, after the final payment has been made, to claim and recover by process of law such sums as may be sufficient to make good any defects in the equipment or to recover any over-payment resulting from dishonest acts of the Contractor.

8. The contract time will commence to run, and the Contractor shall start to perform his obligation under the contract documents, on the day indicated in the Notice to Proceed given by Owner to Contractor; but in no event shall contract time commence to run later than the 30th calendar day after the date when both Owner and Contractor execute the Contract. A Notice to Proceed may be given at any time within thirty (30) calendar days after the date when both Owner and Contractor execute the Contract.

9. The Contractor shall guarantee the materials and workmanship for a period of one (1) year from and after the date of final acceptance by the Owner.

   If, within said guarantee period, repairs are required which, in the opinion of the Owner, are rendered necessary as a result of work or materials which are inferior, defective or not

in accordance with the terms of the Contract, the Contractor shall, promptly upon receipt of notice from the Owner, and without expense to the Owner, (a) correct all defects and place in satisfactory condition in every particular all of such guaranteed work and materials; (b) make good all damage which in the opinion of the Owner is caused by such defects; and (c) make good any other work or material or the equipment and contents of a building, structure or site disturbed in fulfilling any such guarantee.

If the Contractor, after notice, fails within ten (10) days to proceed to comply to the terms of this guarantee, the Owner may have the defects corrected, and the Contractor and his Surety shall be liable for all expense incurred, provided, however, that in case of an emergency where, in the opinion of the Owner, delay would cause serious loss or damage, repairs may be made without notice being given to the Contractor and the Contractor shall pay the cost thereof.

IN WITNESS WHEREOF, the said Contractor has executed this instrument and the City Manager, pursuant to resolution duly adopted, has caused this instrument to be executed in the name of the City of Lacey the day and year first above-written.

_____

_____

_____
Contractor

_____
Contractor's Registration Number (UBI No.)

_____
City of Lacey Business License Number

_____
City Manager

ATTEST:
By:

_____
City Clerk

APPROVED AS TO FORM:
By :

_____
City Attorney

CONTRACTOR'S PERFORMANCE/PAYMENT BOND
to City of Lacey, Washington

The City of Lacey, Washington, in Thurston County, has awarded to _____ (Contractor), as Principal, a contract for the construction of the project designated as **2022 SIDEWALK REPAIR**, Project No. **PW 2022-15** in Lacey, Washington, and said Principal is required under the terms of the Contract to furnish a performance/payment bond in accordance with chapter 39.08 Revised Code of Washington (RCW).

The Principal, and _____(Surety), a corporation, organized under the laws of _____ and licensed to do business in the State of Washington as surety and named in the current list of "Surety Companies Acceptable in Federal Bonds" as published in the Federal Register by the Audit Staff Bureau of Accounts, U.S. Treasury Dept., are jointly and severally held and firmly bound to the City of Lacey, as Obligee, in the sum of $_____ total Contract amount (including Washington State sales tax), subject to the provisions herein.

The obligations of this bond shall become null and void, if and when the Principal, its heirs, executors, administrators, successors, or assigns shall well and faithfully perform all of the Principal's obligations under the Contract and fulfill all the terms and conditions of all duly authorized modifications, additions, and changes to said Contract that may hereafter be made, at the time and in the manner therein specified; shall pay all persons in accordance with chapters 39.08, 39.12, and 60.28 RCW, including all workers, laborers, mechanics, subcontractors, and material suppliers, and all persons who shall supply such contractor or subcontractor with provisions and supplies for the carrying on of such work; shall warranty the work as provided in the Contract and shall indemnify and hold harmless the Obligee from any defects in the workmanship and materials incorporated into the work for the period identified in the Contract; and if such obligations have not been fulfilled, this bond shall remain in full force and effect.

The Surety for value received agrees that no change, extension of time, alteration or addition to the terms of the Contract, the specifications accompanying the Contract, or to the work to be performed under the Contract shall in any way affect its obligation on this bond, and waives notice of any change, extension of time, alteration or addition to the terms of the Contract or the work performed. The Surety agrees that modifications and changes to the terms and conditions of the Contract that increase the total amount to be paid the Principal shall automatically increase the obligation of the Surety on this bond and notice to Surety is not required for such increased obligation.

This bond may be executed in two original counterparts and shall be signed by the parties' duly authorized officers. This bond will only be accepted if it is accompanied by a fully executed and original power of attorney for the officer executing on behalf of the surety.

PRINCIPAL (CONTRACTOR)		SURETY	
_____		_____	
Principal Signature	Date	Surety Signature	Date
_____		_____	
Printed Name		Printed Name	
_____		_____	
Title		Title	

Name, address, and telephone of local office/agent of Surety Company is:

_____

_____

DECLARATION OF OPTION FOR MANAGEMENT OF STATUTORY RETAINED PERCENTAGE

A. I hereby elect to have the retained percentage of this contract held in a fund by the City of Lacey until forty-five (45) days following final acceptance of the work.

_____
Contractor (please print)

_____ _____
Date Signature

B. I hereby elect to have the City of Lacey invest the retained percentage of this contract from time to time as such retained percentage accrues and in accordance with RCW Ch. 60.28.

I hereby designate _____ as the repository for the escrow of said funds.

I hereby further agree to be fully responsible for payment of all costs or fees incurred as a result of placing said percentage in escrow and investing it as authorized by statue.

The City of Lacey shall not be liable in any way for any costs or fees in connection therewith.

_____
Contractor (please print)

_____ _____
Date Signature

C. I hereby elect to hold a retainage bond.

_____
Contractor (please print)

_____ _____
Date Signature

CERTIFICATION OF EMPLOYMENT SECURITY DEPARTMENT (ESD)
GOOD STANDING AND NUMBER

The bidder hereby provides an ESD number and certifies that per RCW 39.04.350 and Title 50 RCW, in which the City will verify prior to entering into contract with the Contractor, that the Bidder has a valid ESD number and is deemed to be in good standing with Washington State's Employment Security Department.

I certify under penalty of perjury under the laws of the State of Washington that the foregoing is true and correct.

_____
Bidder's Business Name

_____
Employment Security Department (ESD) Number

_____
WA State Unified Business Identifier (UBI #)

_____
Signature of Authorized Official*

_____
Printed Name

_____
Title

Date	City	State

This form must be submitted with the Bid Proposal or as a Supplement to the Bid no later than 24 hours after the time for delivery of the Bid Proposal, as provided for in Section 1-02.9 of the Contract Provisions.

D

SPECIAL PROVISIONS

TABLE OF CONTENTS

SPECIAL PROVISIONS 1

INTRODUCTION TO THE SPECIAL PROVISIONS 1
DESCRIPTION OF WORK 1
1-01 DEFINITIONS AND TERMS 2
1-02 BID PROCEDURES AND CONDITIONS 4
1-03 AWARD AND EXECUTION OF CONTRACT 8
1-04 SCOPE OF THE WORK 10
1-05 CONTROL OF WORK 11
1-06 CONTROL OF MATERIAL 14
1-07 LEGAL RELATIONS AND RESPONSIBILITIES TO THE PUBLIC 15
1-08 PROSECUTION AND PROGRESS 21
1-09 MEASUREMENT AND PAYMENT 24
1-10 TEMPORARY TRAFFIC CONTROL 26
2-02 REMOVAL OF STRUCTURES AND OBSTRUCTIONS 27
2-07 WATERING 29
7-15 SERVICE CONNECTIONS 30
8-01 EROSION CONTROL AND WATER POLLUTION CONTROL 31
8-14 CEMENT CONCRETE SIDEWALKS 33
8-02 TREE ROOT PRUNING 34
8-04 CURBS, GUTTERS, AND SPILLWAYS 36
8-05 LAWN AND LANDSCAPE RESTORATION 37
8-50 MISCELLANEOUS 38

SPECIAL PROVISIONS

INTRODUCTION TO THE SPECIAL PROVISIONS
(August 14, 2013 APWA GSP)

The work on this project shall be accomplished in accordance with the *Standard Specifications for Road, Bridge and Municipal Construction*, 2018 edition, as issued by the Washington State Department of Transportation (WSDOT) and the American Public Works Association (APWA), Washington State Chapter (hereafter "Standard Specifications"). The Standard Specifications, as modified or supplemented by the Amendments to the Standard Specifications and these Special Provisions, all of which are made a part of the Contract Documents, shall govern all of the Work.

These Special Provisions are made up of both General Special Provisions (GSPs) from various sources, which may have project-specific fill-ins; and project-specific Special Provisions. Each Provision either supplements, modifies, or replaces the comparable Standard Specification, or is a new Provision. The deletion, amendment, alteration, or addition to any subsection or portion of the Standard Specifications is meant to pertain only to that particular portion of the section, and in no way should it be interpreted that the balance of the section does not apply.

The project-specific Special Provisions are not labeled as such. The GSPs are labeled under the headers of each GSP, with the effective date of the GSP and its source. For example:

(March 8, 2013 APWA GSP)
(April 1, 2013 WSDOT GSP)
(May 1, 2013 Lacey GSP)

Also incorporated into the Contract Documents by reference are:

Manual on Uniform Traffic Control Devices for Streets and Highways, currently adopted edition, with Washington State modifications, if any

Standard Plans for Road, Bridge and Municipal Construction, WSDOT/APWA, current edition

City of Lacey Development Guidelines and Public Works Standards, current edition

Contractor shall obtain copies of these publications, at Contractor's own expense.

DESCRIPTION OF WORK

This contract provides for the removal of tree stumps, installation of root barrier, replacement of topsoil to grade, removal and replacement of traffic curb, sidewalk and driveway entrances, and other work as outlined in bid documents.

1-01 DEFINITIONS AND TERMS

1-01.3 Definitions

(January 4, 2016 APWA GSP)

Delete the heading Completion Dates and the three paragraphs that follow it, and replace them with the following:

Dates

Bid Opening Date
The date on which the Contracting Agency publicly opens and reads the Bids.

Award Date
The date of the formal decision of the Contracting Agency to accept the lowest responsible and responsive Bidder for the Work.

Contract Execution Date
The date the Contracting Agency officially binds the Agency to the Contract.

Notice to Proceed Date
The date stated in the Notice to Proceed on which the Contract time begins.

Substantial Completion Date
The day the Engineer determines the Contracting Agency has full and unrestricted use and benefit of the facilities, both from the operational and safety standpoint, any remaining traffic disruptions will be rare and brief, and only minor incidental work, replacement of temporary substitute facilities, plant establishment periods, or correction or repair remains for the Physical Completion of the total Contract.

Physical Completion Date
The day all of the Work is physically completed on the project. All documentation required by the Contract and required by law does not necessarily need to be furnished by the Contractor by this date.

Completion Date
The day all the Work specified in the Contract is completed and all the obligations of the Contractor under the contract are fulfilled by the Contractor. All documentation required by the Contract and required by law must be furnished by the Contractor before establishment of this date.

Final Acceptance Date
The date on which the Contracting Agency accepts the Work as complete.

Supplement this Section with the following:

All references in the Standard Specifications, Amendments, or WSDOT General Special Provisions, to the terms “Department of Transportation”, “Washington State Transportation Commission”, “Commission”, “Secretary of Transportation”, “Secretary”, “Headquarters”, and “State Treasurer” shall be revised to read “Contracting Agency”.

All references to the terms “State” or “state” shall be revised to read “Contracting Agency” unless the reference is to an administrative agency of the State of Washington, a State statute or regulation, or the context reasonably indicates otherwise.
All references to “State Materials Laboratory” shall be revised to read “Contracting Agency designated location”.

All references to “final contract voucher certification” shall be interpreted to mean the Contracting Agency form(s) by which final payment is authorized, and final completion and acceptance granted.

Additive
A supplemental unit of work or group of bid items, identified separately in the Bid Proposal, which may, at the discretion of the Contracting Agency, be awarded in addition to the base bid.

Alternate
One of two or more units of work or groups of bid items, identified separately in the Bid Proposal, from which the Contracting Agency may make a choice between different methods or material of construction for performing the same work.

Business Day
A business day is any day from Monday through Friday except holidays as listed in Section 1-08.5.

Contract Bond
The definition in the Standard Specifications for “Contract Bond” applies to whatever bond form(s) are required by the Contract Documents, which may be a combination of a Payment Bond and a Performance Bond.

Contract Documents
See definition for “Contract”.

Contract Time
The period of time established by the terms and conditions of the Contract within which the Work must be physically completed.

Notice of Award
The written notice from the Contracting Agency to the successful Bidder signifying the Contracting Agency’s acceptance of the Bid Proposal.

Notice to Proceed
The written notice from the Contracting Agency or Engineer to the Contractor authorizing and directing the Contractor to proceed with the Work and establishing the date on which the Contract time begins.

Traffic
Both vehicular and non-vehicular traffic, such as pedestrians, bicyclists, wheelchairs, and equestrian traffic.

1-02 BID PROCEDURES AND CONDITIONS

1-02.1 Prequalification of Bidders

Delete this Section and replace it with the following:

1-02.1 Qualifications of Bidder

(January 24, 2011 APWA GSP)

Before award of a public works contract, a bidder must meet at least the minimum qualifications of RCW 39.04.350(1) to be considered a responsible bidder and qualified to be awarded a public works project.

1-02.4 Examination of Plans, Specifications and Site of Work

1-02.4(1) General

(August 15, 2016 APWA GSP Option A)

The first sentence of the last paragraph is revised to read:

Any prospective Bidder desiring an explanation or interpretation of the Bid Documents, must request the explanation or interpretation in writing soon enough to allow a written reply to reach all prospective Bidders before the submission of their Bids.

1-02.5 Proposal Forms

(July 31, 2017 APWA GSP)

Delete this section and replace it with the following:

The Proposal Form will identify the project and its location and describe the work. It will also list estimated quantities, units of measurement, the items of work, and the materials to be furnished at the unit bid prices. The bidder shall complete spaces on the proposal form that call for, but are not limited to, unit prices; extensions; summations; the total bid amount; signatures; date; and, where applicable, retail sales taxes and acknowledgment of addenda; the bidder's name, address, telephone number, and signature; the bidder's UDBE/DBE/M/WBE commitment, if applicable; a State of Washington Contractor's Registration Number; and a Business License Number, if applicable. Bids shall be completed by typing or shall be printed in ink by hand, preferably in black ink. The required certifications are included as part of the Proposal Form.

The Contracting Agency reserves the right to arrange the proposal forms with alternates and additives, if such be to the advantage of the Contracting Agency. The bidder shall bid on all alternates and additives set forth in the Proposal Form unless otherwise specified.

1-02.6 Preparation of Proposal

(June 20, 2017 APWA GSP)

Supplement the second paragraph with the following:

4. If a minimum bid amount has been established for any item, the unit or lump sum price must equal or exceed the minimum amount stated.
5. Any correction to a bid made by interlineation, alteration, or erasure, shall be initialed by the signer of the bid.

Delete the last paragraph, and replace it with the following:

The Bidder shall make no stipulation on the Bid Form, nor qualify the bid in any manner.

A bid by a corporation shall be executed in the corporate name, by the president or a vice president (or other corporate officer accompanied by evidence of authority to sign).

A bid by a partnership shall be executed in the partnership name, and signed by a partner. A copy of the partnership agreement shall be submitted with the Bid Form if any UDBE requirements are to be satisfied through such an agreement.

A bid by a joint venture shall be executed in the joint venture name and signed by a member of the joint venture. A copy of the joint venture agreement shall be submitted with the Bid Form if any UDBE requirements are to be satisfied through such an agreement.

1-02.6 Preparation of Proposal

(August 2, 2004 WSDOT 1-02.6OPT15.GR1)

The fifth and sixth paragraphs of Section 1-02.6 are deleted.

1-02.7 Bid Deposit

(March 8, 2013 APWA GSP)

Supplement this section with the following:

Bid bonds shall contain the following:

1. Contracting Agency-assigned number for the project;
2. Name of the project;
3. The Contracting Agency named as obligee;
4. The amount of the bid bond stated either as a dollar figure or as a percentage which represents five percent of the maximum bid amount that could be awarded;
5. Signature of the bidder's officer empowered to sign official statements. The signature of the person authorized to submit the bid should agree with the signature on the bond, and the title of the person must accompany the said signature;
6. The signature of the surety's officer empowered to sign the bond and the power of attorney.

If so stated in the Contract Provisions, bidder must use the bond form included in the Contract Provisions.

If so stated in the Contract Provisions, cash will not be accepted for a bid deposit.

1-02.9 Delivery of Proposal

(February 16, 2018 APWA GSP Option B)

Delete this section and replace it with the following:

Each Proposal shall be submitted in a sealed envelope, with the Project Name and Project Number as stated in the Call for Bids clearly marked on the outside of the envelope, or as otherwise required in the Bid Documents, to ensure proper handling and delivery.

The Bidder shall submit to the Contracting Agency a signed "Certification of Compliance with Wage Payment Statutes" document where the Bidder under penalty of perjury verifies that the Bidder is in compliance with responsible bidder criteria in RCW 39.04.350 subsection (1) (g), as required per Section 1-02.14. The "Certification of Compliance with Wage Payment Statutes" document shall be received either with the Bid Proposal or as a Supplement to the Bid. The document shall be received no later than 24 hours (not including Saturdays, Sundays and Holidays) after the time for delivery of the Bid Proposal.

If submitted after the Bid Proposal is due, the document(s) shall be submitted as follows:

1. In a sealed envelope labeled the same as for the Proposal, with "Supplemental Information" added, or
2. By facsimile to the following FAX number: 360-456-7799, or
3. By e-mail to the following e-mail address: acsmith@ci.lacey.wa.us

All other information required to be submitted with the Bid Proposal must be submitted with the Bid Proposal itself, at the time stated in the Call for Bids.

The Contracting Agency will not open or consider any Bid Proposal that is received after the time specified in the Call for Bids for receipt of Bid Proposals, or received in a location other than that specified in the Call for Bids. The Contracting Agency will not open or consider any "Supplemental Information" (Certification of Compliance with Wage Payment Statutes) that is received after the time specified above, or received in a location other than that specified in the Call for Bids.

1-02.10 Withdrawing, Revising, or Supplementing Proposal

(July 23, 2015 APWA GSP)

Delete this section in its entirety, and replace it with the following:

After submitting a physical Bid Proposal to the Contracting Agency, the Bidder may withdraw, revise, or supplement it if:

1. The Bidder submits a written request signed by an authorized person and physically delivers it to the place designated for receipt of Bid Proposals, and
2. The Contracting Agency receives the request before the time set for receipt of Bid Proposals, and
3. The revised or supplemented Bid Proposal (if any) is received by the Contracting Agency before the time set for receipt of Bid Proposals.

If the Bidder's request to withdraw, revise, or supplement its Bid Proposal is received before the time set for receipt of Bid Proposals, the Contracting Agency will return the unopened Proposal package to the Bidder. The Bidder must then submit the revised or supplemented package in its entirety. If the Bidder does not submit a revised or supplemented package, then its bid shall be considered withdrawn.

Late revised or supplemented Bid Proposals or late withdrawal requests will be date recorded by the Contracting Agency and returned unopened. Mailed, Emailed, or faxed requests to withdraw, revise, or supplement a Bid Proposal are not acceptable.

1-02.13 Irregular Proposals

(June 20, 2017 APWA GSP)

Delete this section and replace it with the following:

1. A Proposal will be considered irregular and will be rejected if:
   a. The Bidder is not prequalified when so required;
   b. The authorized Proposal form furnished by the Contracting Agency is not used or is altered;
   c. The completed Proposal form contains any unauthorized additions, deletions, alternate Bids, or conditions;
   d. The Bidder adds provisions reserving the right to reject or accept the award, or enter into the Contract;
   e. A price per unit cannot be determined from the Bid Proposal;
   f. The Proposal form is not properly executed;
   g. The Bidder fails to submit or properly complete a Subcontractor list, if applicable, as required in Section 1-02.6;
   h. The Bidder fails to submit or properly complete an Underutilized Disadvantaged Business Enterprise Certification, if applicable, as required in Section 1-02.6;
   i. The Bidder fails to submit written confirmation from each UDBE firm listed on the Bidder's completed UDBE Utilization Certification that they are in agreement with the bidder's UDBE participation commitment, if applicable, as required in Section 1-02.6, or if the written confirmation that is submitted fails to meet the requirements of the Special Provisions;
   j The Bidder fails to submit UDBE Good Faith Effort documentation, if applicable, as required in Section 1-02.6, or if the documentation that is submitted fails to demonstrate that a Good Faith Effort to meet the Condition of Award was made;
   k. The Bid Proposal does not constitute a definite and unqualified offer to meet the material terms of the Bid invitation; or
   l. More than one Proposal is submitted for the same project from a Bidder under the same or different names.

2. A Proposal may be considered irregular and may be rejected if:
   a. The Proposal does not include a unit price for every Bid item;
   b. Any of the unit prices are excessively unbalanced (either above or below the amount of a reasonable Bid) to the potential detriment of the Contracting Agency;
   c. Receipt of Addenda is not acknowledged;
   d. A member of a joint venture or partnership and the joint venture or partnership submit Proposals for the same project (in such an instance, both Bids may be rejected); or
   e. If Proposal form entries are not made in ink.

1-02.14 Disqualification of Bidders

(July 31, 2017 APWA GSP Option A)

Delete this Section and replace it with the following:

A Bidder will be deemed not responsible if the Bidder does not meet the mandatory bidder responsibility criteria in RCW 39.04.350(1), as amended.

The Contracting Agency will verify that the Bidder meets the mandatory bidder responsibility criteria in RCW 39.04.350(1). To assess bidder responsibility, the Contracting Agency reserves the right to request documentation as needed from the Bidder

and third parties concerning the Bidder's compliance with the mandatory bidder responsibility criteria.

The Bidder shall submit to the Contracting Agency a signed "Certification of Compliance with Wage Payment Statutes", document where the Bidder under penalty of perjury verifies that the Bidder is in compliance with responsible bidder criteria in RCW 39.04.350 subsection (1)(g). A form appropriate for "Certification of Compliance with Wage Payment Statutes" will be provided by the Contracting Agency in the Bid Documents. The form provided in the Bid Documents shall be submitted with the Bid as stated in Section 1-02.9.

If the Contracting Agency determines the Bidder does not meet the mandatory bidder responsibility criteria in RCW 39.04.350(1) and is therefore not a responsible Bidder, the Contracting Agency shall notify the Bidder in writing, with the reasons for its determination. If the Bidder disagrees with this determination, it may appeal the determination within two (2) business days of the Contracting Agency's determination by presenting its appeal and any additional information to the Contracting Agency. The Contracting Agency will consider the appeal and any additional information before issuing its final determination. If the final determination affirms that the Bidder is not responsible, the Contracting Agency will not execute a contract with any other Bidder until at least two business days after the Bidder determined to be not responsible has received the Contracting Agency's final determination.

1-02.15 Pre-Award Information

(August 14, 2013 APWA GSP)

Revise this section to read:

Before awarding any contract, the Contracting Agency may require one or more of these items or actions of the apparent lowest responsible bidder:

1. A complete statement of the origin, composition, and manufacture of any or all materials to be used,
2. Samples of these materials for quality and fitness tests,
3. A progress schedule (in a form the Contracting Agency requires) showing the order of and time required for the various phases of the work,
4. A breakdown of costs assigned to any bid item,
5. Attendance at a conference with the Engineer or representatives of the Engineer,
6. Obtain, and furnish a copy of, a business license to do business in the city or county where the work is located.
7. Any other information or action taken that is deemed necessary to ensure that the bidder is the lowest responsible bidder.

1-03 AWARD AND EXECUTION OF CONTRACT

1-03.3 Execution of Contract

(October 1, 2005 APWA GSP)

Revise this section to read:

Copies of the Contract Provisions, including the unsigned Form of Contract, will be available for signature by the successful bidder on the first business day following award.

The number of copies to be executed by the Contractor will be determined by the Contracting Agency.

Within 10 calendar days after the award date, the successful bidder shall return the signed Contracting Agency-prepared contract, an insurance certification as required by Section 1-07.18, and a satisfactory bond as required by law and Section 1-03.4. Before execution of the contract by the Contracting Agency, the successful bidder shall provide any pre-award information the Contracting Agency may require under Section 1-02.15.

Until the Contracting Agency executes a contract, no proposal shall bind the Contracting Agency nor shall any work begin within the project limits or within Contracting Agency-furnished sites. The Contractor shall bear all risks for any work begun outside such areas and for any materials ordered before the contract is executed by the Contracting Agency.

If the bidder experiences circumstances beyond their control that prevents return of the contract documents within the calendar days after the award date stated above, the Contracting Agency may grant up to a maximum of 10 additional calendar days for return of the documents, provided the Contracting Agency deems the circumstances warrant it.

1-03.4 Contract Bond

(July 23, 2015 APWA GSP)

Delete the first paragraph and replace it with the following:

The successful bidder shall provide executed payment and performance bond(s) for the full contract amount. The bond may be a combined payment and performance bond; or be separate payment and performance bonds. In the case of separate payment and performance bonds, each shall be for the full contract amount. The bond(s) shall:

1. Be on Contracting Agency-furnished form(s);
2. Be signed by an approved surety (or sureties) that:
   a) Is registered with the Washington State Insurance Commissioner, and
   b) Appears on the current Authorized Insurance List in the State of Washington published by the Office of the Insurance Commissioner,
3. Guarantee that the Contractor will perform and comply with all obligations, duties, and conditions under the Contract, including but not limited to the duty and obligation to indemnify, defend, and protect the Contracting Agency against all losses and claims related directly or indirectly from any failure:
   a) Of the Contractor (or any of the employees, subcontractors, or lower tier subcontractors of the Contractor) to faithfully perform and comply with all contract obligations, conditions, and duties, or
   b) Of the Contractor (or the subcontractors or lower tier subcontractors of the Contractor) to pay all laborers, mechanics, subcontractors, lower tier subcontractors, material person, or any other person who provides supplies or provisions for carrying out the work;
4. Be conditioned upon the payment of taxes, increases, and penalties incurred on the project under titles 50, 51, and 82 RCW; and
5. Be accompanied by a power of attorney for the Surety's officer empowered to sign the bond; and
6. Be signed by an officer of the Contractor empowered to sign official statements (sole proprietor or partner). If the Contractor is a corporation, the bond(s) must be signed by the president or vice president, unless accompanied by written proof of the authority of the individual signing the bond(s) to bind the corporation (i.e., corporate

resolution, power of attorney, or a letter to such effect signed by the president or vice president).

1-03.7 Judicial Review

(July 23, 2015 APWA GSP)

Delete this section and replace it with the following:

Any decision made by the Contracting Agency regarding the Award and execution of the Contract or Bid rejection shall be conclusive subject to the scope of judicial review permitted under Washington Law. Such review, if any, shall be timely filed in the Superior Court of the county where the Contracting Agency headquarters is located, provided that where an action is asserted against a county, RCW 36.01.05 shall control venue and jurisdiction.

1-04 SCOPE OF THE WORK

1-04.2 Coordination of Contract Documents, Plans, Special Provisions, Specifications, and Addenda

(April 30, 2015 Lacey GSP)

Revise the second paragraph to read:

Any inconsistency in the parts of the contract shall be resolved by following this order of precedence (e.g., 1 presiding over 2, 2 presiding over 3, 3 over 4, and so forth):

1. Contract Form,
2. Addenda (if any),
3. Proposal Form,
4. Special Provisions,
5. Technical Specifications, if included,
6. Contract Plans,
7. Amendments to the Standard Specifications,
8. WSDOT Standard Specifications for Road, Bridge, and Municipal Construction,
2. City of Lacey Development Guidelines and Public Works Standards, and
3. WSDOT Standard Plans for Road, Bridge and Municipal Construction

1-04.6 Variations in Estimated Quantities

(July 23, 2015 APWA GSP Option B)

Revise the first paragraph to read:

Payment to the Contractor will be made only for the actual quantities of Work performed and accepted in conformance with the Contract. When the accepted quantity of Work performed under a unit item varies from the original Proposal quantity, payment will be at the unit Contract price for all Work unless the total accepted quantity of any Contract item, adjusted to exclude added or deleted amounts included in change orders accepted by both parties, increases or decreases by more than 25 percent from the original Proposal quantity, and if the total extended bid price for that item at time of award is equal to or greater than 10 percent of the total contract price at time of award. In that case, payment for contract work may be adjusted as described herein:

1-05 CONTROL OF WORK

1-05.7 Removal of Defective and Unauthorized Work

(October 1, 2005 APWA GSP)

Supplement this section with the following:

If the Contractor fails to remedy defective or unauthorized work within the time specified in a written notice from the Engineer, or fails to perform any part of the work required by the Contract Documents, the Engineer may correct and remedy such work as may be identified in the written notice, with Contracting Agency forces or by such other means as the Contracting Agency may deem necessary.

If the Contractor fails to comply with a written order to remedy what the Engineer determines to be an emergency situation, the Engineer may have the defective and unauthorized work corrected immediately, have the rejected work removed and replaced, or have work the Contractor refuses to perform completed by using Contracting Agency or other forces. An emergency situation is any situation when, in the opinion of the Engineer, a delay in its remedy could be potentially unsafe, or might cause serious risk of loss or damage to the public.
Direct or indirect costs incurred by the Contracting Agency attributable to correcting and remedying defective or unauthorized work, or work the Contractor failed or refused to perform, shall be paid by the Contractor. Payment will be deducted by the Engineer from monies due, or to become due, the Contractor. Such direct and indirect costs shall include in particular, but without limitation, compensation for additional professional services required, and costs for repair and replacement of work of others destroyed or damaged by correction, removal, or replacement of the Contractor's unauthorized work.

No adjustment in contract time or compensation will be allowed because of the delay in the performance of the work attributable to the exercise of the Contracting Agency's rights provided by this Section.

The rights exercised under the provisions of this section shall not diminish the Contracting Agency's right to pursue any other avenue for additional remedy or damages with respect to the Contractor's failure to perform the work as required.

1-05.11 Final Inspections and Operational Testing

(October 1, 2005 APWA GSP)

Delete this section and replace it with the following:

1-05.11(1) Substantial Completion Date

When the Contractor considers the work to be substantially complete, the Contractor shall so notify the Engineer and request the Engineer establish the Substantial Completion Date. The Contractor's request shall list the specific items of work that remain to be completed in order to reach physical completion. The Engineer will schedule an inspection of the work with the Contractor to determine the status of completion. The Engineer may also establish the Substantial Completion Date unilaterally.

If, after this inspection, the Engineer concurs with the Contractor that the work is substantially complete and ready for its intended use, the Engineer, by written notice to the Contractor, will set the Substantial Completion Date. If, after this inspection the Engineer

does not consider the work substantially complete and ready for its intended use, the Engineer will, by written notice, so notify the Contractor giving the reasons therefore.

Upon receipt of written notice concurring in or denying substantial completion, whichever is applicable, the Contractor shall pursue vigorously, diligently and without unauthorized interruption, the work necessary to reach Substantial and Physical Completion. The Contractor shall provide the Engineer with a revised schedule indicating when the Contractor expects to reach substantial and physical completion of the work.

The above process shall be repeated until the Engineer establishes the Substantial Completion Date and the Contractor considers the work physically complete and ready for final inspection.

1-05.11(2) Final Inspection and Physical Completion Date

When the Contractor considers the work physically complete and ready for final inspection, the Contractor by written notice, shall request the Engineer to schedule a final inspection. The Engineer will set a date for final inspection. The Engineer and the Contractor will then make a final inspection and the Engineer will notify the Contractor in writing of all particulars in which the final inspection reveals the work incomplete or unacceptable. The Contractor shall immediately take such corrective measures as are necessary to remedy the listed deficiencies. Corrective work shall be pursued vigorously, diligently, and without interruption until physical completion of the listed deficiencies. This process will continue until the Engineer is satisfied the listed deficiencies have been corrected.

If action to correct the listed deficiencies is not initiated within 7 days after receipt of the written notice listing the deficiencies, the Engineer may, upon written notice to the Contractor, take whatever steps are necessary to correct those deficiencies pursuant to Section 1-05.7.

The Contractor will not be allowed an extension of contract time because of a delay in the performance of the work attributable to the exercise of the Engineer's right hereunder.

Upon correction of all deficiencies, the Engineer will notify the Contractor and the Contracting Agency, in writing, of the date upon which the work was considered physically complete. That date shall constitute the Physical Completion Date of the contract, but shall not imply acceptance of the work or that all the obligations of the Contractor under the contract have been fulfilled.

1-05.11(3) Operational Testing

It is the intent of the Contracting Agency to have at the Physical Completion Date a complete and operable system. Therefore when the work involves the installation of machinery or other mechanical equipment; street lighting, electrical distribution or signal systems; irrigation systems; buildings; or other similar work it may be desirable for the Engineer to have the Contractor operate and test the work for a period of time after final inspection but prior to the physical completion date. Whenever items of work are listed in the Contract Provisions for operational testing they shall be fully tested under operating conditions for the time period specified to ensure their acceptability prior to the Physical Completion Date. During and following the test period, the Contractor shall correct any items of workmanship, materials, or equipment which prove faulty, or that are not in first class operating condition. Equipment, electrical controls, meters, or other devices and equipment to be tested during this period shall be tested under the observation of the

Engineer, so that the Engineer may determine their suitability for the purpose for which they were installed. The Physical Completion Date cannot be established until testing and corrections have been completed to the satisfaction of the Engineer.

The costs for power, gas, labor, material, supplies, and everything else needed to successfully complete operational testing, shall be included in the unit contract prices related to the system being tested, unless specifically set forth otherwise in the proposal.

Operational and test periods, when required by the Engineer, shall not affect a manufacturer's guaranties or warranties furnished under the terms of the contract.

1-05.12(1) One-Year Guarantee Period
(March 8, 2013 APWA GSP)

Add the following new section:

The Contractor shall return to the project and repair or replace all defects in workmanship and material discovered within one year after Final Acceptance of the Work. The Contractor shall start work to remedy any such defects within 7 calendar days of receiving Contracting Agency's written notice of a defect, and shall complete such work within the time stated in the Contracting Agency's notice. In case of an emergency, where damage may result from delay or where loss of services may result, such corrections may be made by the Contracting Agency's own forces or another contractor, in which case the cost of corrections shall be paid by the Contractor. In the event the Contractor does not accomplish corrections within the time specified, the work will be otherwise accomplished and the cost of same shall be paid by the Contractor.

When corrections of defects are made, the Contractor shall then be responsible for correcting all defects in workmanship and materials in the corrected work for one year after acceptance of the corrections by Contracting Agency.

This guarantee is supplemental to and does not limit or affect the requirements that the Contractor's work comply with the requirements of the Contract or any other legal rights or remedies of the Contracting Agency.

1-05.15 Method of Serving Notices
(March 25, 2009 APWA GSP)

Revise the second paragraph to read:

All correspondence from the Contractor shall be directed to the Project Engineer. All correspondence from the Contractor constituting any notification, notice of protest, notice of dispute, or other correspondence constituting notification required to be furnished under the Contract, must be in paper format, hand delivered or sent via mail delivery service to the Project Engineer's office. Electronic copies such as e-mails or electronically delivered copies of correspondence will not constitute such notice and will not comply with the requirements of the Contract.

1-05.16 Water and Power
(October 1, 2005 APWA GSP)

Add the following new section:

The Contractor shall make necessary arrangements, and shall bear the costs for power and water necessary for the performance of the work, unless the contract includes power and water as a pay item.

1-06 CONTROL OF MATERIAL

1-06.1 Approval of Materials Prior to Use

(January 4, 2016 Lacey GSP)

The second sentence of first paragraph is revised to read:

The Contractor shall use the Qualified Product List (QPL), the Aggregate Source Approval (ASA) Database, or the City of Lacey Request for Approval of Material (COL RAM) form.

1-06.1(2) Request for Approval of Material (RAM)

The first paragraph is revised to read:

The COL RAM shall be used with all submittals. The COL RAM shall be prepared by the Contractor in accordance with the instructions and submitted to the engineer for approval before the material is incorporated into the Work..

Supplement this section with the following:

The Contractor shall submit sufficient information that describes the materials proposed as defined and described in these specifications and plans within 10 working days following the Notice to Proceed.

The Contractor shall submit one electronic of catalog cuts, shop drawings, and a material testing sample, as required for all items to be used in this contract for approval. The Contractor shall circle or highlight products and materials that are specific to this project, and cross out items that are not for this project.

All items not in exact compliance with the specifications must be noted as a change. The Contractor shall include an explanation, product specifications, sample articles, and any other items that will aid the Engineer in approving an item not in exact accordance with the specifications.

All submittals shall be submitted in Adobe Acrobat format and submittals that exceed 10 pages shall include a table of contents. Submittals that are not submitted in the format outlined may be rejected outright and the Contractor is required to resubmit in the correct format. The form and the submittal shall be sent in the same e-mail. Submittals that exceed 10 MB shall either be provided on a CD, a flash drive or via an internet link.

The Engineer will review submittals within 10 working days. The Contractor may request additional working days if approval or disapproval is not received in 10 working days. The Contractor may not request additional working days for failure to submit sufficient information to approve an item, or for rejection of an item not in accordance with the specifications.

Resubmittals shall be submitted within 5 working days from City's transmittal, to the contractor, of the Engineer reviewed submittal. If the submittal is "Rejected", the contractor

shall resubmit the entire submittal. If the submittal is marked “Revise and Resubmit”, the contractor shall submit items that are identified in the Engineer’s comments.

Any material purchased or labor performed prior to such approval shall be at the Contractor's risk. The Contractor must receive all material approvals before the materials will be allowed on the project.

1-07 LEGAL RELATIONS AND RESPONSIBILITIES TO THE PUBLIC

1-07.1 Laws to be Observed

(October 1, 2005 APWA GSP)

Supplement this section with the following:

In cases of conflict between different safety regulations, the more stringent regulation shall apply.

The Washington State Department of Labor and Industries shall be the sole and paramount administrative agency responsible for the administration of the provisions of the Washington Industrial Safety and Health Act of 1973 (WISHA).

The Contractor shall maintain at the project site office, or other well-known place at the project site, all articles necessary for providing first aid to the injured. The Contractor shall establish, publish, and make known to all employees, procedures for ensuring immediate removal to a hospital, or doctor’s care, persons, including employees, who may have been injured on the project site. Employees should not be permitted to work on the project site before the Contractor has established and made known procedures for removal of injured persons to a hospital or a doctor’s care.

The Contractor shall have sole responsibility for the safety, efficiency, and adequacy of the Contractor’s plant, appliances, and methods, and for any damage or injury resulting from their failure, or improper maintenance, use, or operation. The Contractor shall be solely and completely responsible for the conditions of the project site, including safety for all persons and property in the performance of the work. This requirement shall apply continuously, and not be limited to normal working hours. The required or implied duty of the Engineer to conduct construction review of the Contractor’s performance does not, and shall not, be intended to include review and adequacy of the Contractor’s safety measures in, on, or near the project site.

1-07.2 State Sales Tax

(June 27, 2011 APWA GSP)

Delete this section, including its sub-sections, in its entirety and replace it with the following:

The Washington State Department of Revenue has issued special rules on the State sales tax. Sections 1-07.2(1) through 1-07.2(3) are meant to clarify those rules. The Contractor should contact the Washington State Department of Revenue for answers to questions in this area. The Contracting Agency will not adjust its payment if the Contractor bases a bid on a misunderstood tax liability.

The Contractor shall include all Contractor-paid taxes in the unit bid prices or other contract amounts. In some cases, however, state retail sales tax will not be included. Section 1-07.2(2) describes this exception.

The Contracting Agency will pay the retained percentage (or release the Contract Bond if a FHWA-funded Project) only if the Contractor has obtained from the Washington State Department of Revenue a certificate showing that all contract-related taxes have been paid (RCW 60.28.051). The Contracting Agency may deduct from its payments to the Contractor any amount the Contractor may owe the Washington State Department of Revenue, whether the amount owed relates to this contract or not. Any amount so deducted will be paid into the proper State fund.

1-07.2(1) State Sales Tax — Rule 171

WAC 458-20-171, and its related rules, apply to building, repairing, or improving streets, roads, etc., which are owned by a municipal corporation, or political subdivision of the state, or by the United States, and which are used primarily for foot or vehicular traffic. This includes storm or combined sewer systems within and included as a part of the street or road drainage system and power lines when such are part of the roadway lighting system. For work performed in such cases, the Contractor shall include Washington State Retail Sales Taxes in the various unit bid item prices, or other contract amounts, including those that the Contractor pays on the purchase of the materials, equipment, or supplies used or consumed in doing the work.

1-07.2(2) State Sales Tax — Rule 170

WAC 458-20-170, and its related rules, apply to the constructing and repairing of new or existing buildings, or other structures, upon real property. This includes, but is not limited to, the construction of streets, roads, highways, etc., owned by the state of Washington; water mains and their appurtenances; sanitary sewers and sewage disposal systems unless such sewers and disposal systems are within, and a part of, a street or road drainage system; telephone, telegraph, electrical power distribution lines, or other conduits or lines in or above streets or roads, unless such power lines become a part of a street or road lighting system; and installing or attaching of any article of tangible personal property in or to real property, whether or not such personal property becomes a part of the realty by virtue of installation.

For work performed in such cases, the Contractor shall collect from the Contracting Agency, retail sales tax on the full contract price. The Contracting Agency will automatically add this sales tax to each payment to the Contractor. For this reason, the Contractor shall not include the retail sales tax in the unit bid item prices, or in any other contract amount subject to Rule 170, with the following exception.

Exception: The Contracting Agency will not add in sales tax for a payment the Contractor or a subcontractor makes on the purchase or rental of tools, machinery, equipment, or consumable supplies not integrated into the project. Such sales taxes shall be included in the unit bid item prices or in any other contract amount.

1-07.2(3) Services

The Contractor shall not collect retail sales tax from the Contracting Agency on any contract wholly for professional or other services (as defined in Washington State Department of Revenue Rules 138 and 244).

1-07.18 Public Liability and Property Damage Insurance

Delete this section in its entirety, and replace it with the following:

1-07.18 Insurance

(January 4, 2016 APWA GSP)

1-07.18(1) General Requirements

A. The Contractor shall procure and maintain the insurance described in all subsections of section 1-07.18 of these Special Provisions, from insurers with a current A. M. Best rating of not less than A-: VII and licensed to do business in the State of Washington. The Contracting Agency reserves the right to approve or reject the insurance provided, based on the insurer's financial condition.

B. The Contractor shall keep this insurance in force without interruption from the commencement of the Contractor's Work through the term of the Contract and for thirty (30) days after the Physical Completion date, unless otherwise indicated below.

C. If any insurance policy is written on a claims made form, its retroactive date, and that of all subsequent renewals, shall be no later than the effective date of this Contract. The policy shall state that coverage is claims made, and state the retroactive date. Claims-made form coverage shall be maintained by the Contractor for a minimum of 36 months following the Completion Date or earlier termination of this Contract, and the Contractor shall annually provide the Contracting Agency with proof of renewal. If renewal of the claims made form of coverage becomes unavailable, or economically prohibitive, the Contractor shall purchase an extended reporting period ("tail") or execute another form of guarantee acceptable to the Contracting Agency to assure financial responsibility for liability for services performed.

D. The Contractor's Automobile Liability, Commercial General Liability and Excess or Umbrella Liability insurance policies shall be primary and non-contributory insurance as respects the Contracting Agency's insurance, self-insurance, or self-insured pool coverage. Any insurance, self-insurance, or self-insured pool coverage maintained by the Contracting Agency shall be excess of the Contractor's insurance and shall not contribute with it.

E. The Contractor shall provide the Contracting Agency and all additional insureds with written notice of any policy cancellation, within two business days of their receipt of such notice.

F. The Contractor shall not begin work under the Contract until the required insurance has been obtained and approved by the Contracting Agency

G. Failure on the part of the Contractor to maintain the insurance as required shall constitute a material breach of contract, upon which the Contracting Agency may, after giving five business days' notice to the Contractor to correct the breach, immediately terminate the Contract or, at its discretion, procure or renew such insurance and pay any and all premiums in connection therewith, with any sums so expended to be repaid to the Contracting Agency on demand, or at the sole discretion of the Contracting Agency, offset against funds due the Contractor from the Contracting Agency.

H. All costs for insurance shall be incidental to and included in the unit or lump sum prices of the Contract and no additional payment will be made.

1-07.18(2) Additional Insured

All insurance policies, with the exception of Workers Compensation, and of Professional Liability and Builder's Risk (if required by this Contract) shall name the following listed entities as additional insured(s) using the forms or endorsements required herein:

- The Contracting Agency and its officers, elected officials, employees, agents, and volunteers

The above-listed entities shall be additional insured(s) for the full available limits of liability maintained by the Contractor, irrespective of whether such limits maintained by the Contractor are greater than those required by this Contract, and irrespective of whether the Certificate of Insurance provided by the Contractor pursuant to 1-07.18(4) describes limits lower than those maintained by the Contractor.

For Commercial General Liability insurance coverage, the required additional insured endorsements shall be at least as broad as ISO forms CG 20 10 10 01 for ongoing operations and CG 20 37 10 01 for completed operations.

1-07.18(3) Subcontractors

The Contractor shall cause each Subcontractor of every tier to provide insurance coverage that complies with all applicable requirements of the Contractor-provided insurance as set forth herein, except the Contractor shall have sole responsibility for determining the limits of coverage required to be obtained by Subcontractors.

The Contractor shall ensure that all Subcontractors of every tier add all entities listed in 1 07.18(2) as additional insureds, and provide proof of such on the policies as required by that section as detailed in 1-07.18(2) using an endorsement as least as broad as ISO CG 20 10 10 01 for ongoing operations and CG 20 37 10 01 for completed operations.

Upon request by the Contracting Agency, the Contractor shall forward to the Contracting Agency evidence of insurance and copies of the additional insured endorsements of each Subcontractor of every tier as required in 1-07.18(4) Verification of Coverage.

1-07.18(4) Verification of Coverage

The Contractor shall deliver to the Contracting Agency a Certificate(s) of Insurance and endorsements for each policy of insurance meeting the requirements set forth herein when the Contractor delivers the signed Contract for the work. Failure of Contracting Agency to demand such verification of coverage with these insurance requirements or failure of Contracting Agency to identify a deficiency from the insurance documentation provided shall not be construed as a waiver of Contractor's obligation to maintain such insurance.

Verification of coverage shall include:

1. An ACORD certificate or a form determined by the Contracting Agency to be equivalent.
2. Copies of all endorsements naming Contracting Agency and all other entities listed in 1 07.18(2) as additional insured(s), showing the policy number. The Contractor may submit a copy of any blanket additional insured clause from its policies instead of a separate endorsement.
3. Any other amendatory endorsements to show the coverage required herein.
4. A notation of coverage enhancements on the Certificate of Insurance shall not satisfy these requirements – actual endorsements must be submitted.

Upon request by the Contracting Agency, the Contractor shall forward to the Contracting Agency a full and certified copy of the insurance policy(s). If Builders Risk insurance is

required on this Project, a full and certified copy of that policy is required when the Contractor delivers the signed Contract for the work.

1-07.18(5) Coverages and Limits

The insurance shall provide the minimum coverages and limits set forth below. Contractor's maintenance of insurance, its scope of coverage, and limits as required herein shall not be construed to limit the liability of the Contractor to the coverage provided by such insurance, or otherwise limit the Contracting Agency's recourse to any remedy available at law or in equity.

All deductibles and self-insured retentions must be disclosed and are subject to approval by the Contracting Agency. The cost of any claim payments falling within the deductible or self-insured retention shall be the responsibility of the Contractor. In the event an additional insured incurs a liability subject to any policy's deductibles or self-insured retention, said deductibles or self-insured retention shall be the responsibility of the Contractor.

1-07.18(5)A Commercial General Liability

Commercial General Liability insurance shall be written on coverage forms at least as broad as ISO occurrence form CG 00 01, including but not limited to liability arising from premises, operations, stop gap liability, independent contractors, products-completed operations, personal and advertising injury, and liability assumed under an insured contract. There shall be no exclusion for liability arising from explosion, collapse or underground property damage.

The Commercial General Liability insurance shall be endorsed to provide a per project general aggregate limit, using ISO form CG 25 03 05 09 or an equivalent endorsement.

Contractor shall maintain Commercial General Liability Insurance arising out of the Contractor's completed operations for at least three years following Substantial Completion of the Work.

Such policy must provide the following minimum limits:
$1,000,000 Each Occurrence
$2,000,000 General Aggregate
$2,000,000 Products & Completed Operations Aggregate
$1,000,000 Personal & Advertising Injury each offence
$1,000,000 Stop Gap / Employers' Liability each accident

1-07.18(5)B Automobile Liability

Automobile Liability shall cover owned, non-owned, hired, and leased vehicles; and shall be written on a coverage form at least as broad as ISO form CA 00 01. If the work involves the transport of pollutants, the automobile liability policy shall include MCS 90 and CA 99 48 endorsements.

Such policy must provide the following minimum limit:
$1,000,000 Combined single limit each accident

1-07.18(5)C Workers' Compensation

The Contractor shall comply with Workers' Compensation coverage as required by the Industrial Insurance laws of the State of Washington.

1-07.23 Public Convenience and Safety

1-07.23(1) Construction Under Traffic

(January 5, 2015 WSDOT 1-07.23(1).OPT5.FR1)

Section 1-07.23(1) is supplemented with the following

If the Engineer determines the permitted closure hours adversely affect traffic, the Engineer may adjust the hours accordingly. The Engineer will notify the Contractor in writing of any change in the closure hours.

Lane closures are not allowed on any of the following:

1. A holiday,

2. A holiday weekend; holidays that occur on Friday, Saturday, Sunday or Monday are considered a holiday weekend. A holiday weekend includes Saturday, Sunday, and the holiday.

3. After noon on the day prior to a holiday or holiday weekend, and

1-07.24 Rights of Way

(July 23, 2015 APWA GSP)

Delete this section and replace it with the following:

Street Right of Way lines, limits of easements, and limits of construction permits are indicated in the Plans. The Contractor's construction activities shall be confined within these limits, unless arrangements for use of private property are made.

Generally, the Contracting Agency will have obtained, prior to bid opening, all rights of way and easements, both permanent and temporary, necessary for carrying out the work. Exceptions to this are noted in the Bid Documents or will be brought to the Contractor's attention by a duly issued Addendum.

Whenever any of the work is accomplished on or through property other than public Right of Way, the Contractor shall meet and fulfill all covenants and stipulations of any easement agreement obtained by the Contracting Agency from the owner of the private property. Copies of the easement agreements may be included in the Contract Provisions or made available to the Contractor as soon as practical after they have been obtained by the Engineer.

Whenever easements or rights of entry have not been acquired prior to advertising, these areas are so noted in the Plans. The Contractor shall not proceed with any portion of the work in areas where right of way, easements or rights of entry have not been acquired until the Engineer certifies to the Contractor that the right of way or easement is available or that the right of entry has been received. If the Contractor is delayed due to acts of omission on the part of the Contracting Agency in obtaining easements, rights of entry or right of way, the Contractor will be entitled to an extension of time. The Contractor agrees that such delay shall not be a breach of contract.

Each property owner shall be given 48 hours notice prior to entry by the Contractor. This includes entry onto easements and private property where private improvements must be adjusted.

The Contractor shall be responsible for providing, without expense or liability to the Contracting Agency, any additional land and access thereto that the Contractor may desire for temporary construction facilities, storage of materials, or other Contractor needs. However, before using any private property, whether adjoining the work or not, the Contractor shall file with the Engineer a written permission of the private property owner, and, upon vacating the premises, a written release from the property owner of each property disturbed or otherwise interfered with by reasons of construction pursued under this contract. The statement shall be signed by the private property owner, or proper authority acting for the owner of the private property affected, stating that permission has been granted to use the property and all necessary permits have been obtained or, in the case of a release, that the restoration of the property has been satisfactorily accomplished. The statement shall include the parcel number, address, and date of signature. Written releases must be filed with the Engineer before the Completion Date will be established.

1-08 PROSECUTION AND PROGRESS

Add the following new section:

1-08.0 Preliminary Matters

(May 25, 2006 APWA GSP)

Add the following new section:

1-08.0(1) Preconstruction Conference

(October 10, 2008 APWA GSP)

Prior to the Contractor beginning the work, a preconstruction conference will be held between the Contractor, the Engineer, and such other interested parties as may be invited. The purpose of the preconstruction conference will be:

To review the initial progress schedule;
To establish a working understanding among the various parties associated or affected by the work;
To establish and review procedures for progress payment, notifications, approvals, submittals, etc.;
To establish normal working hours for the work;
To review safety standards and traffic control; and
To discuss such other related items as may be pertinent to the work.

The Contractor shall prepare and submit at the preconstruction conference the following:

A breakdown of all lump sum items;
A preliminary schedule of working drawing submittals; and
A list of material sources for approval if applicable.

1-08.0(2) Hours of Work

(December 8, 2014 APWA GSP)

Except in the case of emergency or unless otherwise approved by the Engineer, the normal working hours for the Contract shall be any consecutive 8-hour period between 7:00 a.m. and 6:00 p.m. Monday through Friday, exclusive of a lunch break. If the Contractor desires different than the normal working hours stated above, the request must be submitted in writing prior to the preconstruction conference, subject to the provisions below. The working hours for the Contract shall be established at or prior to the preconstruction conference.

All working hours and days are also subject to local permit and ordinance conditions (such as noise ordinances).

If the Contractor wishes to deviate from the established working hours, the Contractor shall submit a written request to the Engineer for consideration. This request shall state what hours are being requested, and why. Requests shall be submitted for review no later than 5 prior to the day(s) the Contractor is requesting to change the hours.

If the Contracting Agency approves such a deviation, such approval may be subject to certain other conditions, which will be detailed in writing. For example:

1. On non-Federal aid projects, requiring the Contractor to reimburse the Contracting Agency for the costs in excess of straight-time costs for Contracting Agency representatives who worked during such times. (The Engineer may require designated representatives to be present during the work. Representatives who may be deemed necessary by the Engineer include, but are not limited to: survey crews; personnel from the Contracting Agency's material testing lab; inspectors; and other Contracting Agency employees or third party consultants when, in the opinion of the Engineer, such work necessitates their presence.)
2. Considering the work performed on Saturdays, Sundays, and holidays as working days with regard to the contract time.
3. Considering multiple work shifts as multiple working days with respect to contract time even though the multiple shifts occur in a single 24-hour period.
4. If a 4-10 work schedule is requested and approved the non working day for the week will be charged as a working day.
5. If Davis Bacon wage rates apply to this Contract, all requirements must be met and recorded properly on certified payroll

1-08.0(2)A Lacey Hours of Work

(October 16, 2014 Lacey GSP Option A)

Add the following new section:

Lacey Municipal Code (LMC) Chapter 14.38.010, prohibits outside construction activities between the hours of 9:00 p.m. and 7:00 a.m. in or adjacent to residential zones of the City. A waiver to this ordinance will not be allowed, except in case of emergency, or where operations are necessary during such hours in order to promote the safety of the traveling public as shown in theses specifications or as determined by the Engineer.

1-08.3(2)A Type A Progress Schedule

(March 13, 2012 APWA GSP)

Revise this section to read:

The Contractor shall submit five (5) copies of a Type A Progress Schedule no later than at the preconstruction conference, or some other mutually agreed upon submittal time. The schedule may be a critical path method (CPM) schedule, bar chart, or other standard schedule format. Regardless of which format used, the schedule shall identify the critical path. The Engineer will evaluate the Type A Progress Schedule and approve or return the schedule for corrections within 15 calendar days of receiving the submittal.

1-08.4 Prosecution of Work

(July 23, 2015 APWA GSP)

Delete this section in its entirety, and replace it with the following:

1-08.4 Notice to Proceed and Prosecution of Work

Notice to Proceed will be given after the contract has been executed and the contract bond and evidence of insurance have been approved and filed by the Contracting Agency. The Contractor shall not commence with the work until the Notice to Proceed has been given by the Engineer. The Contractor shall commence construction activities on the project site within ten days of the Notice to Proceed Date, unless otherwise approved in writing. The Contractor shall diligently pursue the work to the physical completion date within the time specified in the contract. Voluntary shutdown or slowing of operations by the Contractor shall not relieve the Contractor of the responsibility to complete the work within the time(s) specified in the contract.

When shown in the Plans, the first order of work shall be the installation of high visibility fencing to delineate all areas for protection or restoration, as described in the Contract. Installation of high visibility fencing adjacent to the roadway shall occur after the placement of all necessary signs and traffic control devices in accordance with 1-10.1(2). Upon construction of the fencing, the Contractor shall request the Engineer to inspect the fence. No other work shall be performed on the site until the Contracting Agency has accepted the installation of high visibility fencing, as described in the Contract.

1-08.5 Time for Completion

(**** Lacey)**

This project shall be completed in accordance with the provisions of Section 1-08 of the Standard Specifications within **80** working days. All design and submittal work for this project shall be completed within the first 14 calendar days of the contract.

1-08.5 Time for Completion

(September 12, 2016 APWA GSP Option A)

Revise the third and fourth paragraphs to read:

Contract time shall begin on the first working day following the Notice to Proceed Date.

Each working day shall be charged to the contract as it occurs, until the contract work is physically complete. If substantial completion has been granted and all the authorized working days have been used, charging of working days will cease. Each week the Engineer will provide the Contractor a statement that shows the number of working days: (1) charged to the contract the week before; (2) specified for the physical completion of the contract; and (3) remaining for the physical completion of the contract. The statement will also show the nonworking days and any partial or whole day the Engineer declares as

unworkable. Within 10 calendar days after the date of each statement, the Contractor shall file a written protest of any alleged discrepancies in it. To be considered by the Engineer, the protest shall be in sufficient detail to enable the Engineer to ascertain the basis and amount of time disputed. By not filing such detailed protest in that period, the Contractor shall be deemed as having accepted the statement as correct. If the Contractor is approved to work 10 hours a day and 4 days a week (a 4-10 schedule) and the fifth day of the week in which a 4-10 shift is worked would ordinarily be charged as a working day then the fifth day of that week will be charged as a working day whether or not the Contractor works on that day.

Revise the sixth paragraph to read:

The Engineer will give the Contractor written notice of the completion date of the contract after all the Contractor's obligations under the contract have been performed by the Contractor. The following events must occur before the Completion Date can be established:

1. The physical work on the project must be complete; and
2. The Contractor must furnish all documentation required by the contract and required by law, to allow the Contracting Agency to process final acceptance of the contract. The following documents must be received by the Project Engineer prior to establishing a completion date:
    a. Certified Payrolls (per Section 1-07.9(5)).
    b. Material Acceptance Certification Documents
    c. Monthly Reports of Amounts Credited as DBE Participation, as required by the Contract Provisions.
    d. Final Contract Voucher Certification
    e. Copies of the approved "Affidavit of Prevailing Wages Paid" for the Contractor and all Subcontractors
    f. Property owner releases per Section 1-07.24

1-08.9 Liquidated Damages

(August 14, 2013 APWA GSP)

Revise the fourth paragraph to read:

When the Contract Work has progressed to Substantial Completion as defined in the Contract, the Engineer may determine that the work is Substantially Complete. The Engineer will notify the Contractor in writing of the Substantial Completion Date. For overruns in Contract time occurring after the date so established, the formula for liquidated damages shown above will not apply. For overruns in Contract time occurring after the Substantial Completion Date, liquidated damages shall be assessed on the basis of direct engineering and related costs assignable to the project until the actual Physical Completion Date of all the Contract Work. The Contractor shall complete the remaining Work as promptly as possible. Upon request by the Project Engineer, the Contractor shall furnish a written schedule for completing the physical Work on the Contract.

1-09 MEASUREMENT AND PAYMENT

1-09.9 Payments

(March 13, 2012 APWA GSP)

Supplement this section with the following:

Lump sum item breakdowns are not required when the bid price for the lump sum item is less than $20,000.

Delete the first four paragraphs and replace them with the following:

The basis of payment will be the actual quantities of Work performed according to the Contract and as specified for payment.

The Contractor shall submit a breakdown of the cost of lump sum bid items at the Preconstruction Conference, to enable the Project Engineer to determine the Work performed on a monthly basis. A breakdown is not required for lump sum items that include a basis for incremental payments as part of the respective Specification. Absent a lump sum breakdown, the Project Engineer will make a determination based on information available. The Project Engineer's determination of the cost of work shall be final.

Progress payments for completed work and material on hand will be based upon progress estimates prepared by the Engineer. A progress estimate cutoff date will be established at the preconstruction conference.

The initial progress estimate will be made not later than 30 days after the Contractor commences the work, and successive progress estimates will be made every month thereafter until the Completion Date. Progress estimates made during progress of the work are tentative, and made only for the purpose of determining progress payment. The progress estimates are subject to change at any time prior to the calculation of the Final Payment.

The value of the progress estimate will be the sum of the following:

1. Unit Price Items in the Bid Form — the approximate quantity of acceptable units of work completed multiplied by the unit price.
2. Lump Sum Items in the Bid Form — based on the approved Contractor's lump sum breakdown for that item, or absent such a breakdown, based on the Engineer's determination.
3. Materials on Hand — 100 percent of invoiced cost of material delivered to Job site or other storage area approved by the Engineer.
4. Change Orders — entitlement for approved extra cost or completed extra work as determined by the Engineer.

Progress payments will be made in accordance with the progress estimate less:

1. Retainage per Section 1-09.9(1), on non FHWA-funded projects;
2. The amount of Progress Payments previously made; and
3. Funds withheld by the Contracting Agency for disbursement in accordance with the Contract Documents.

Progress payments for work performed shall not be evidence of acceptable performance or an admission by the Contracting Agency that any work has been satisfactorily completed. The determination of payments under the contract will be final in accordance with Section 1-05.1.

1-09.11(3) Time Limitation and Jurisdiction

(July 23, 2015 APWA GSP)

Delete this section and replace it with the following:

For the convenience of the parties to the Contract it is mutually agreed by the parties that any claims or causes of action which the Contractor has against the Contracting Agency arising from the Contract shall be brought within 180 calendar days from the date of final acceptance (Section 1-05.12) of the Contract by the Contracting Agency; and it is further agreed that any such claims or causes of action shall be brought only in the Superior Court of the county where the Contracting Agency headquarters is located, provided that where an action is asserted against a county, RCW 36.01.05 shall control venue and jurisdiction. The parties understand and agree that the Contractor's failure to bring suit within the time period provided, shall be a complete bar to any such claims or causes of action. It is further mutually agreed by the parties that when any claims or causes of action which the Contractor asserts against the Contracting Agency arising from the Contract are filed with the Contracting Agency or initiated in court, the Contractor shall permit the Contracting Agency to have timely access to any records deemed necessary by the Contracting Agency to assist in evaluating the claims or action.

1-09.13(3) Claims $250,000 or Less

(October 1, 2005 APWA GSP)

Delete this Section and replace it with the following:

The Contractor and the Contracting Agency mutually agree that those claims that total $250,000 or less, submitted in accordance with Section 1-09.11 and not resolved by nonbinding ADR processes, shall be resolved through litigation unless the parties mutually agree in writing to resolve the claim through binding arbitration.

1-09.13(3)A Administration of Arbitration

(July 23, 2015 APWA GSP)

Revise the third paragraph to read:

The Contracting Agency and the Contractor mutually agree to be bound by the decision of the arbitrator, and judgment upon the award rendered by the arbitrator may be entered in the Superior Court of the county in which the Contracting Agency's headquarters is located, provided that where claims subject to arbitration are asserted against a county, RCW 36.01.05 shall control venue and jurisdiction of the Superior Court. The decision of the arbitrator and the specific basis for the decision shall be in writing. The arbitrator shall use the Contract as a basis for decisions.

1-10 TEMPORARY TRAFFIC CONTROL

1-10.1 General

(January 3, 2017 Lacey GSP)

Supplement this section with the following:

Delays to traffic shall be held to a minimum. There shall be no restrictions or interruptions to traffic on Saturdays, Sundays or Holidays. In addition, there shall be no restrictions or interruptions to traffic after 12:00 noon on the day prior to a holiday or holiday weekend.

There shall be no delay to medical, fire, police, or other emergency vehicles with flashing lights or sirens. The Contractor shall alert all flaggers and personnel of this requirement.

The Contractor shall be responsible for removing the permanent traffic signs, as deemed necessary by the Engineer, and shall install and maintain any temporary signs necessary for the safety of the public.

The Contractor shall maintain pedestrian access at all times, without having pedestrians enter the travel lane.

All lane restrictions shall be held to a minimum time and length. Lane closures shall comply with the traffic control plans and these specifications. If the Contractor wishes to deviate from the plans, the Contractor shall submit a traffic control plan to the Engineer, at no additional cost, that complies with the MUTCD, and the Traffic Control Plans, for approval by the Engineer within (5) five working days before the proposed lane closure. If the Engineer determines that lane restrictions are causing congestion, the Contractor will be required to open any lanes, as determined by the Engineer, until the congestion is eliminated.

During non-working hours, Saturdays, Sundays, and Holidays, the Contractor shall keep all lanes open to traffic throughout the limits of the project with the lane and sidewalk area completely clear of all material, tools, personnel, and equipment as directed by the Engineer.

1-10.5 Lump Sum Bid for Project (No Unit Items)

(August 2, 2004 WSDOT)

"Project Temporary Traffic Control", lump sum.

The lump sum Contract payment shall be full compensation for all costs incurred by the Contractor in performing the Contract Work defined in Section 1-10.

2-02 REMOVAL OF STRUCTURES AND OBSTRUCTIONS

2-02.1 Description

(**** Lacey)**

Supplement this section with the following:

The following items plus all materials resulting from incidental work including clearing; grubbing and roadside cleanup shall be removed from the job site, disposed of in a waste site or when noted on the plans, delivered to the City.

This work consists of but shall not be limited to the following items:

Sidewalk
Driveway Entrances
Sidewalk Ramps
Curb and Gutter
Roadside Cleanup
Rocks and Stumps
Tree Grates

2-02.2 Video

(July 17, 2012 Lacey GSP)

Add the following new section:

The Contractor shall provide pre-construction video of the existing conditions for the construction area including all easements, streets, alleys, and driveways within the project area. Further, video shall include existing drainage, driveways, sidewalks, and other frontage improvements. The Contractor shall also provide pre-construction video of the existing conditions of each face of an existing structure (houses, garages, sheds, fences, etc.), within 30 feet of the construction area.

The Contractor shall provide a copy of the video, in high definition DVD format, to the City prior to any construction.

All costs for providing and furnishing the pre-construction video shall be considered incidental to the Project and no other payment will be allowed.

2-02.3(3) Removal of Pavement, Sidewalks, Curbs, and Gutters

(July 11, 2018 Lacey)

Supplement this section with the following:

In removing pavement, sidewalks, and curbs, the Contractor shall:

1. Mark all cut lines in the field and have the Engineer approve them prior to commencing cutting operations. The Engineer reserves the right to adjust removal to the nearest construction joint.

2. Make a vertical saw cut between any existing pavement, sidewalk, or curb that is to remain and the portion to be removed.

3. All sawcuts shall be continuous and made with saws designed specifically for this purpose; no skip cutting, wheel cutting, or jack hammering will be allowed unless given prior approval by the Engineer.

4. Replace at no expense to the Contracting Agency any pavement designated to remain that is damaged during the removal of other pavement. All damaged sidewalks and curbs shall be replaced to the nearest existing joint.

5. Haul all broken–up pieces of pavement, sidewalks, and curbs to an off-project disposal site.

All transitions to existing asphalt or cement concrete driveways, parking lots, curb and gutter and walkways shall be vertically sawcut full-depth with straight, uniform edges. Existing asphalt pavement roadway edge may be cut with a wheel, provided the wheel cut is full depth and no damage occurs to the pavement which is to remain. Neither impact tools nor pavement breakers may be used for trench crossing of existing pavement. Trench crossing of existing pavement shall be vertically sawcut.

When sawcutting the existing roadway is needed to widen the road to perform excavation, the Contractor shall take extra precaution to make a neat, uniform cut, and shall sawcut pavement to full depth, regardless of number of passes necessary. Compaction of asphalt

near the sawcut is critical and a vertical, neat line sawcut is required. If in the opinion of the Engineer, the cut is not satisfactory due to Contractor's workmanship or equipment, or if the sawcut becomes damaged and irregular, the Contractor shall fix the problem to the satisfaction of the Engineer, at Contractor's own expense.

Prior to removal of pavement and/or concrete, the Contractor shall make a full-depth sawcut to delineate the areas of pavement removal from those areas of pavement to remain. The Engineer shall approve the equipment and procedures used to make the full-depth sawcut. No wastewater from the sawcutting operation shall be released directly to any stream or storm sewer system.

2-02.5 Payment

(******)

Delete this section and replace with the following:

Work in this Section shall be considered incidental to the project and no additional compensation shall be allowed.

2-07 WATERING

2-07.3 Construction Requirements

(October 16, 2009 Lacey GSP)

Supplement this section with the following:

If the Contractor anticipates the use of City water, the Contractor shall apply for a water meter through the City of Lacey. Any damage rendered to the meter shall be repaired or replaced by the Contracting Agency and those costs deducted from monies due to the Contractor. All water used shall be metered and used sparingly for the entire length of the project. The Contractor will not be charged for water used on the project.

The Contractor shall use the water to keep the project site clean and to control dust during and after construction hours as determined by the Engineer.

2-07.4 Measurement

(October 16, 2009 Lacey GSP)

Delete and replace this section with the following:

The Contractor shall apply for a construction meter through the Contracting Agency. All water used shall be measured with the Contracting Agency supplied meter.

2-07.5 Payment

(October 16, 2014 Lacey GSP)

Delete and replace this section with the following:

The Contractor will not be charged for water used on this project. A construction meter will also be provided free of charge. Any costs to repair meters damaged by the Contractor shall be recovered from monies due the Contractor.

All costs to supply tank trucks, and apply water as directed by the Engineer shall be considered incidental to the project and no other payment will be allowed.

7-15 SERVICE CONNECTIONS

7-15.3(5) Repair of Existing Water Service

(January 3, 2017 Lacey GSP)

Add the following new section:

If while pushing or excavating, an existing service line is broken, the Contractor shall follow the course of action as stated below:

- Immediately call or notify the Engineer
- Crimp service line if possible,
- If needed, assist the Engineer or City of Lacey Water repair crew to throttle down the water main,
- Disinfect all fittings and pipe prior to installation. Excavate and repair broken service line while under the direct supervision of the Engineer or wait for assistance from the City of Lacey Water repair crew,
- Flush repaired service line at setter with the assistance of the Engineer until water flow becomes clean, inspect and flush setter and meter, reconnect old service line to meter setter (if applicable) and resume service to residence. Flush hose bib at residence or building until air is removed and water runs clear.

7-15.3(8) Adjust Water Meter

(April 30, 2015 Lacey GSP)

Add the following new section:

The Contractor shall adjust the setter, water meter, and meter box to finished grade as shown on the plans or where directed by the Engineer.

7-15.5 Payment

(October 16, 2016 Lacey GSP)

Supplement this section with the following:

"Adjust Water Meter", per each.
The payment for the items specified above shall be full pay for furnishing all labor, materials, tools, and equipment, and disposing of removed materials necessary or incidental to furnishing and installing the unit complete in place.

8-01 EROSION CONTROL AND WATER POLLUTION CONTROL

8-01.3 Construction Requirements

8-01.3(1) General

(January 5, 2015 WSDOT)

The first through eighth paragraphs of Section 8-01.3(1) are deleted and replaced with the following:

The Contractor shall install a high visibility fence along the site preservation lines shown in the Plans or as instructed by the Engineer.

Throughout the life of the project, the Contractor shall preserve and protect the delineated area, acting immediately to repair or restore any fencing damaged or removed.

Controlling pollution, erosion, runoff, and related damage requires the Contractor to perform temporary Work items including but not limited to:

1. Providing ditches, berms, culverts, and other measures to control surface water.

2. Building dams, settling basins, energy dissipaters, and other measures, to control downstream flows.

3. Controlling underground water found during construction.

4. Covering or otherwise protecting slopes until permanent erosion-control measures are working.

To the degree possible, the Contractor shall coordinate this temporary Work with permanent drainage and erosion control Work the Contract requires.

All sediment control devices including, but not limited to, sediment ponds, perimeter silt fencing, or other sediment trapping BMPs shall be installed prior to any ground disturbing activity. Clearing, grubbing, excavation, borrow, or fill within the Right of Way shall never expose more erodible earth than as listed below:

Western Washington (West of the Cascade Mountain Crest)			Eastern Washington (East of the Cascade Mountain Crest)	
May 1 through September 30	17 Acres		April 1 through October 31	17 Acres
October 1 through April 30	5 Acres		November 1 through March 31	5 Acres

8-01.3(1)A Submittals

(August 3, 2015 WSDOT)

Section 8-01.3(1)A is revised to read:

A Temporary Erosion and Sediment Control (TESC) Plan consists of a narrative section and plan sheets that meets Ecology's Stormwater Pollution Prevention Plan (SWPPP) requirement in the CSWGP. When the Contracting Agency has developed a TESC Plan for

a Contract the narrative is included in the appendix to the Special Provisions and the TESC plan sheets are included in the Contract Plans. The Contracting Agency TESC plan will not include off-site areas used to directly support construction activity.

The Contractor shall either adopt the TESC Plan in the Contract or develop a new TESC Plan. If the Contractor adopts the Contracting Agency TESC Plan the Contractor shall modify the TESC Plan to meet the Contractor's schedule, method of construction, and to include off-site areas that will be used to directly support construction activity such as equipment staging yards, material storage areas, or borrow areas. Contractor TESC Plans shall include all high visibility fence delineation shown on the Contracting Agency Contract Plans. All TESC Plans shall meet the requirements of the current edition of the WSDOT Temporary Erosion and Sediment Control Manual M 3109 and be adapted as needed throughout construction based on site inspections and discharge samples to maintain compliance with the CSWGP. The Contractor shall develop a schedule for implementation of the TESC work and incorporate it into the Contractor's progress schedule.

The Contractor shall submit their TESC Plan (either the adopted plan or new plan) and implementation schedule as Type 2 Working Drawings. At the request of the Engineer updated TESC Plans shall be submitted as Type 1 Working Drawings.

8-01.3(1)B Erosion and Sediment Control (ESC) Lead

(January 5, 2015 WSDOT)

Supplement this section with the following:

The ESC Lead shall implement the TESC Plan. Implementation shall include, but is not limited to:

1. Installing and maintaining all temporary erosion and sediment control Best Management Practices (BMPs) included in the TESC Plan to assure continued performance of their intended function. Damaged or inadequate TESC BMP's shall be corrected immediately.

2. Updating the TESC Plan to reflect current field conditions.

3. Discharge sampling and submitting Discharge Monitoring Reports (DMRs) to Ecology in accordance with the CSWGP.

4. Develop and maintain the Site Log Book as defined in the CSWGP. As a part of the Site Log Book, the Contractor shall develop and maintain a BMP tracking table to show that identified TESC compliance issues are fully resolved within 10 calendar days. The table shall include the date an issue was identified, a description of how it was resolved, and the date the issue was fully resolved.

The ESC Lead shall also inspect all areas disturbed by construction activities, all on-site erosion and sediment control BMP's, and all stormwater discharge points at least once every calendar week and within 24-hours of runoff events in which stormwater discharges from the site. Inspections of temporarily stabilized, inactive sites may be reduced to once every calendar month. The Erosion and Sediment Control Inspection Form (WSDOT Form 220-030) shall be completed for each inspection and a copy shall be submitted to the Engineer no later than the end of the next working day following the inspection.

8-01.3(9)D Inlet Protection

(July 17, 2012 Lacey GSP)

Delete the first paragraph and replace with the following:

All catch basins and inlets within the project limits, downstream or affected by construction activities shall have inlet protection and as required by the Engineer. Inlet protection devices shall be installed prior to beginning clearing, grubbing, or earthwork activities.

8-01.3(15) Maintenance

(January 5, 2015 WSDOT)

The fifth paragraph of Section 8-01.3(15) is deleted.

8-01.5 Payment

(******)

Modify this section with the following:

If no bid item for "Erosion Control and Water Pollution Control" is included, any work described in these sections shall be incidental to the project and no additional compensation shall be allowed.

The Contractor shall bear full responsibility for erosion/water pollution control in all sources of material, disposal sites, and haul roads.

8-14 CEMENT CONCRETE SIDEWALKS

8-14.1 Description

(March 31, 2015 Lacey)

Supplement this section with the following:

Where applicable in this section "concrete sidewalks" shall read "concrete sidewalks, ramps and driveways" unless a bid item is provided. Depth shall be as shown in the Plans. The minimum driveway depth shall be 6 inches. The Contractor shall match color, texture, and material of existing sidewalks and driveways.

All ADA requirements will be strictly enforced including ramps and slopes as shown in the plans. Sidewalk and Bus Pads shall not exceed 2% cross slope.

8-14.4 Measurement

(April 2, 2018 Lacey)

Supplement this section with the following:

Cement concrete sidewalks shall be measured by the square yard of finished surface outside of the ramp pay limits and will not include the surface area of the curb ramps (i.e. the sidewalk quantities indicated on the Plans are for informational purposes only and include the ramp area). Cement Concrete sidewalks shall include cement concrete bike ramps, and bus pads.

8-14.5 Payment

(April 2, 2018 Lacey)

Supplement this section with the following:

The unit contract price for "Cement Conc. Sidewalk" per square yard shall be full pay for furnishing all materials, equipment, and labor to construct the sidewalk, and bus pads complete in-place, to include forms, and concrete. Further, the Contractor shall make all excavations including haul and disposal, regardless of depth required, for constructing the sidewalk to the lines and grades shown, and shall include all costs associated with maintaining pedestrian access through the construction area with crushed surfacing top course or other material as approved by the Engineer.

8-02 TREE ROOT PRUNING

8-02.1 Description

(******)

Replace this section with the following:

This work shall consist of removing tree root balls in their entirety, taking care not to damage surrounding area, removing and replacing tree wells, installing root barrier, and replacing topsoil to grade as shown in the plans and specifications. The City will mark applicable trees and cut them down at the base prior to work beginning.

8-02.2 Materials

(October 29, 2010 Lacey)

Supplement this section with the following:

Geotextile root control system shall be NDS Root Barrier Panel Model No. EP-2450 or Engineer approved equal.

Grates shall be cast iron per ASTM A48 class 35b or better and meet the specifications shown on DWG. No. 4-30.

8-02.3(4) Topsoil

(October 16, 2016 Lacey)

Supplement this section with the following:

The Contractor shall thoroughly scarify the subgrade by tilling, disking or harrowing after the subgrade elevation has been established as indicated on the Plans.

Prior to placement of topsoil, the Engineer shall approve native or imported material. If the Contractor furnishes and places Topsoil Type A in the roadside planting areas without prior approval, it shall be done at the Contractor's expense. Final grading shall include raking, floating, dragging, and rolling to remove all surface irregularities and to provide a firm, smooth surface with positive drainage. Imported topsoil shall not be placed more than 3 days prior to permanent seeding.

The Engineer reserves the right to randomly sample and test the imported topsoil as it is placed. Test results shall be compared to the requirements of Section 9-14. If it is determined the topsoil does not meet requirements, the Contractor shall be required to remove the topsoil quantity as determined by the Engineer and replace it at the Contractor's expense with an acceptable alternative topsoil.

The Contractor may take samples of the topsoil to be removed for testing. If soil samples from areas to be removed are shown to meet the requirements, the Engineer may adjust the quantity to be removed as represented by the passing samples. All costs incurred by the Contractor to test topsoil shall be borne by the Contractor and no further compensation will be allowed.

The Contractor shall submit a stockpile plan that identifies the stockpile location and stockpile limits for approval by the Engineer. The plan shall also be approved by the Owner prior to beginning stockpiling operations.

8-02.3(4)A Topsoil Type A

(October 16, 2009 Lacey)

Supplement this section with the following:

The Engineer will approve topsoil prior to procurement and placement. Topsoil Type A shall meet all requirements of Special Provision 9-14.1(1).

Topsoil shall be placed at depth shown in the Plans and Section E. Provide and install Topsoil Type A to the specified depth in all tree, shrub, groundcover, and other planting areas.

8-02.3(5) Planting Area Preparation

(October 16, 2016 Lacey)

Section 8-02.3(5) is supplemented with the following:

Planting area preparation will be required in all landscaped areas as shown on the Plans. Planting area preparation shall include removal of existing vegetation, construction debris, all visible rocks or other detrimental material from planter strips located within the project limits before adding soil amendments to the imported topsoil for the roadside planting areas, uniformly tilling the soil amendments into the top 8"-12" of soil, using a rototiller or similar machine, grading the blended soils, and then thoroughly watering down.

Root barrier panel shall be installed after the sidewalk forms are removed, abutted to the inside edge of concrete. The 24"x24" panels shall be placed 2" (+/- 1") below finish grade and 28" deep on both sides of the tree, extending out 15' on center from the trunk.

Planting area preparation in the roadside includes preserving and protecting existing trees. Where noted on plan, Engineer shall identify and mark existing trees to be saved. Following marking, Contractor shall provide and place Engineer approved high visibility orange plastic fence around critical root zones of each marked tree or tree groupings. Do not begin construction activity on the roadsides until all plastic mesh fencing is in place, and approved by the Engineer.

Identify existing trees that are to be removed, that were not removed during roadway construction, prior to starting planting. Obtain approval to remove existing trees from

Engineer. Contractor to provide, install and maintain tree protection throughout project duration.

All planting area preparation shall be conducted under favorable weather conditions only. Soil shall not be worked when excessively dry or wet. Engineer reserves the right to stop any work taking place when conditions are considered detrimental to soil structure or plant growth.

All planting areas shall be weed free and approved by the Engineer before starting rototilling (with soil amendments distributed over designated surface areas) and after rototilling has been completed. All beds shall then be approved by the Engineer for fine grading, before starting any planting operations.

All planting surface areas shall be left with a firm, uniform surface, free of weeds and undulations or other irregularities. Remove all rocks, clods, and debris from all planting surfaces, unless otherwise specified on the plans or directed by the Engineer.

Preliminary grading shall be done in such a manner as to anticipate the finished grades after placement of topsoil, soil amendments and bark mulch (if specified). Excess soil shall be removed or redistributed before application of soil mix, fertilizer, and mulch. Where soil is to be replaced by plants and mulch, allowance shall be made so that when finish grading has begun, there shall be no deficiency in the specified depth of mulched planting beds.

The Contractor shall bear final responsibility for proper surface drainage of the site and the features thereon. Any discrepancy in the drawings or specifications, obstructions on the site, or prior work done by another party which the Contractor feels precludes establishing proper drainage, shall be brought immediately to the attention of the Engineer in writing for correction or relief of said responsibility.

8-02.4 Measurement

(******)

Measurement for tree root pruning will be by the unit for each stump removed.

8-02.5 Payment

(******)

Supplement this section with the following:

"Tree Root Pruning" shall be measured per each and will be full compensation for all labor, materials, and equipment required to remove one tree stump, scarify the subgrade, rake, remove debris such as rocks and organic material and shape the material as shown in the plans including root barrier, topsoil, and other items required to prepare the site for re-planting.

8-04 CURBS, GUTTERS, AND SPILLWAYS

8-04.3 Construction Requirements

(October 16, 2009 Lacey GSP)

Supplement this section with the following:

This work shall be constructed as shown in the plans. Gutter Pans at catch basin grates shall meet WSDOT Standard Plan F-10.16-00 Cement Concrete Curb and Gutter Pan.

8-04.4 Measurement

(October 16, 2009 Lacey GSP)

Supplement this section with the following:

Cement concrete valley gutters will be measured per linear foot.
Modified cement concrete traffic curbs will be measured per linear foot.

8-04.5 Payment

****

Supplement this section with the following:

"Cement Conc. Traffic Curb", per linear foot.

The unit contract per linear foot price for shall be full pay for all labor, equipment and materials to construct the items in accordance with the Plans.

8-05 LAWN AND LANDSCAPE RESTORATION

(October 16, 2014 Lacey GSP)

Add the following new section:

8-05.1 Description

The Contractor shall take every precaution to preserve and protect existing lawn and landscape areas. Only those landscaped areas necessary for construction shall be disturbed. All lawn areas and landscaping damaged or removed shall be repaired as directed by the Engineer. Lawn areas damaged or removed shall be restored with topsoil and seed as directed by the Engineer.

8-05.3 Construction Requirements

The Contractor shall repair any vegetation, fencing, culverts, ditch sections, or any other objects or structures that are not covered by a specific bid item. Restoration shall return anything damaged by construction to their original condition or to a condition superior to the original condition. The Contractor shall be responsible to evaluate the site prior to bidding this project to determine the areas to be affected by the particular construction method or machinery proposed to be used.

8-05.4 Measurement

No unit of measure shall apply to the lump sum price for Lawn and Landscape Restoration.

8-05.5 Payment

"Lawn and Landscape Restoration", lump sum.
The lump sum contract price for "Lawn and Landscape Restoration" shall be full pay for all labor, materials, and equipment to restore the project site to condition equal to, or superior to the original condition.

If no bid item for “Lawn and Landscape Restoration” is included, any work described in this section shall be incidental to the project.

8-50 MISCELLANEOUS

Add the following new sections:

8-50.2 PROJECT CLOSEOUT

(April 2, 2018 Lacey)

Description

This work shall consist of completing all miscellaneous items of work in accordance with the Plans and these Specifications that are required to achieve Completion and Final Acceptance, as identified by the Engineer and the Contracting Agency. This work may include but is not limited to punch list items, record drawings, O&M Manuals, training, material acceptance documents, copies of the approved “Affidavit of Prevailing Wages Paid” for the Contractor and all Subcontractors, and any other work required in these Plans and Specifications that has not been completed.

Measurement

No unit of measurement shall apply to the lump sum price for “Project Closeout”.

Payment

“Project Closeout”, lump sum.
The unit contract price per lump sum for “Project Closeout” includes all compensation for all costs of completing the miscellaneous items of work identified by the Contracting Agency prior to final acceptance of the Project. A fixed lump sum price has been included in the Proposal for this work. Any additional costs anticipated or incurred by the Contractor for the work shall be included in the various lump sum and unit price bid items as found in the Proposal. Neither partial payment, nor additional compensation shall be allowed.

E

STANDARD DETAILS

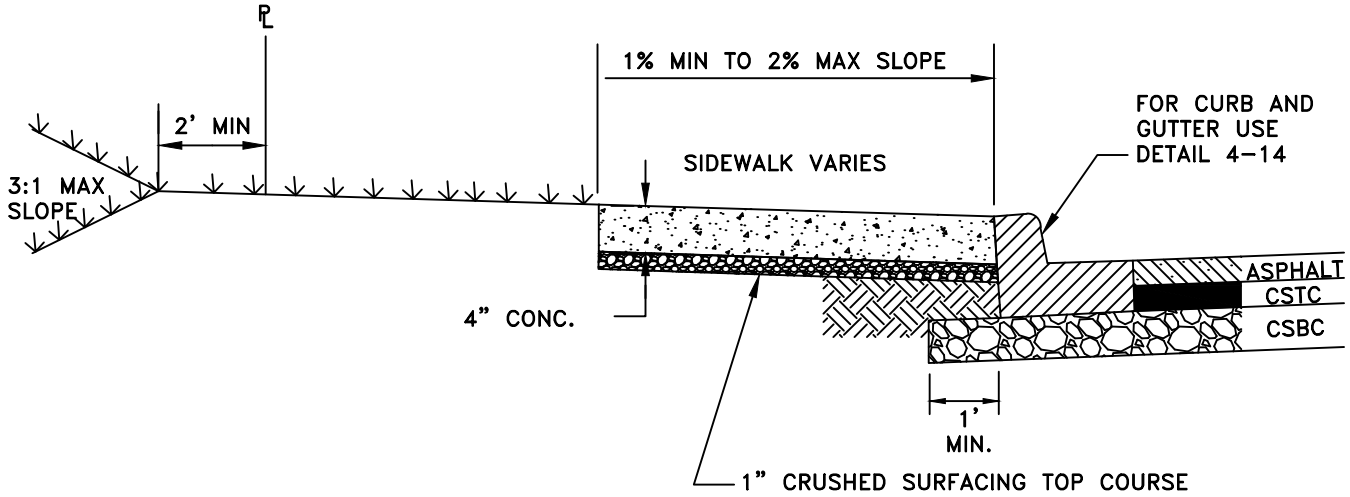

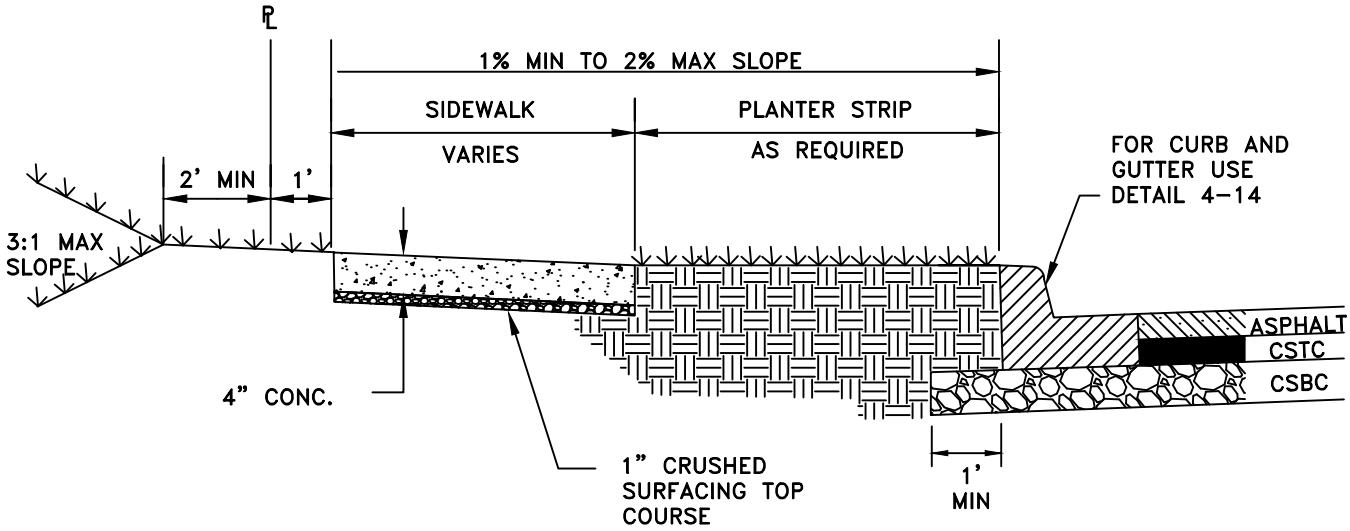

NTS

GENERAL NOTES:

1. FORMS SHALL BE WOOD OR METAL AND SHALL EXTEND FOR THE FULL DEPTH OF THE CONCRETE, SEE SECTION 8-14.3(2).
2. ALL FORMS SHALL BE STRAIGHT, FREE FROM WARP, AND OF SUFFICIENT STRENGTH TO RESIST THE PRESSURE OF THE CONCRETE WITHOUT SPRING.
3. FOR JOINTS AND SCORING SEE DETAIL 4-10.
4. CONCRETE DRIVEWAYS REQUIRE A MINIMUM DEPTH OF 6".
5. SEE ROADWAY SECTIONS FOR STREET TREE LOCATIONS.
6. THE TOP OR TOE OF ALL SLOPES SHALL BEGIN 2' BACK OF THE SIDEWALK OR THE RIGHT-OF-WAY LINE.
7. WHEN APPLICABLE THE RIGHT-OF-WAY LINE SHALL BE 1' BEHIND THE SIDEWALK.

CITY OF LACEY, WASHINGTON
DEPT. OF PUBLIC WORKS

SIDEWALK

APPROVED
Roger A Schoessel
CITY ENGINEER

DWG. NO.
4-9

DES.	DWN.	CKD.	DATE
WHO	WHO	RAS	12/15/2014

DG4-9.DWG

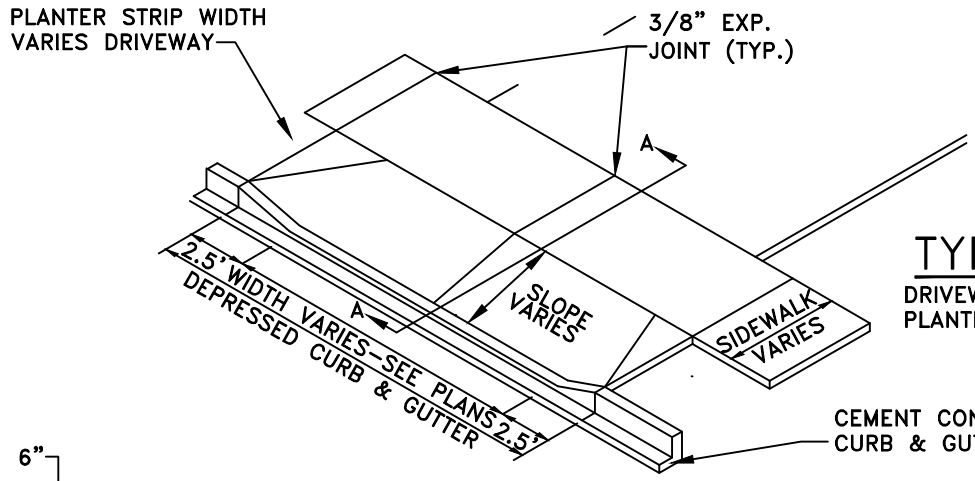

TYPE I

DRIVEWAY WITH
PLANTER STRIP

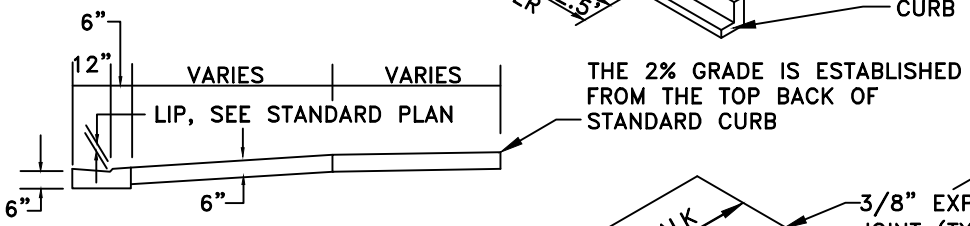

SECTION A–A

TYPE II

DRIVEWAY WITH
WIDE SIDEWALK

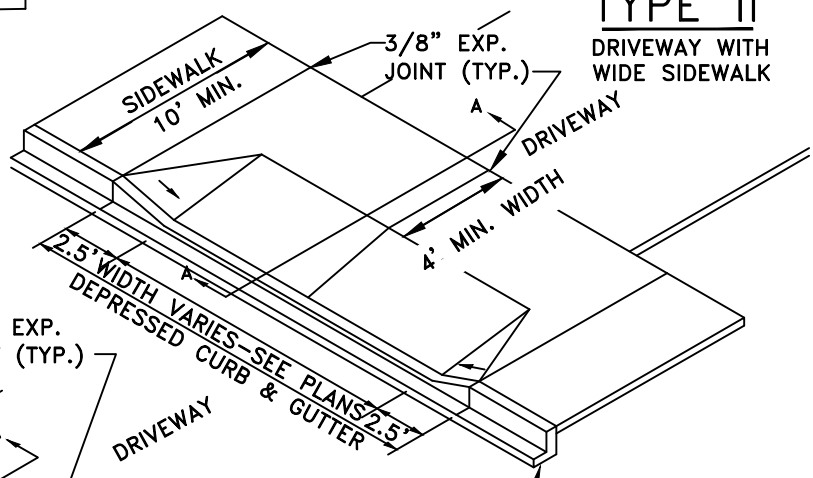

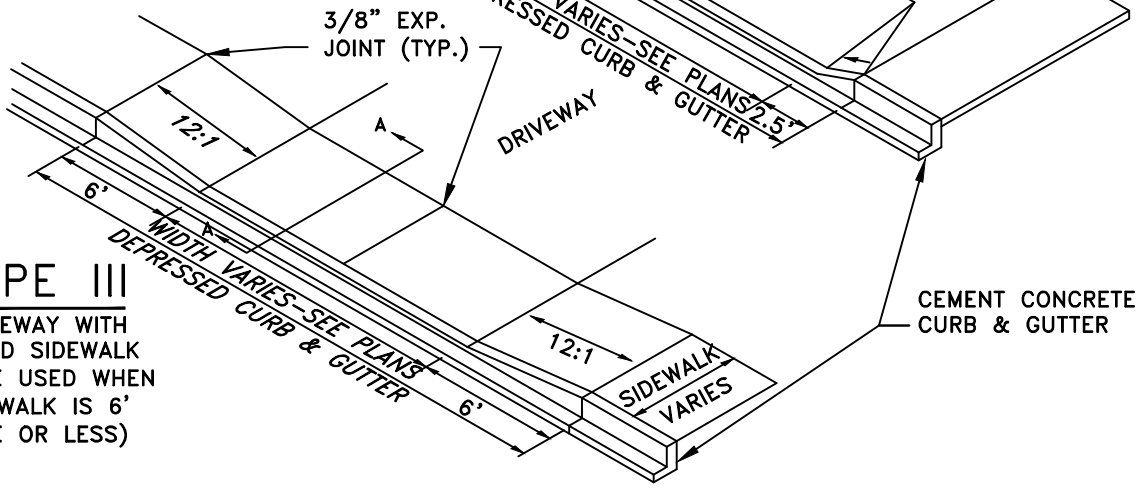

TYPE III

DRIVEWAY WITH
DIPPED SIDEWALK
(TO BE USED WHEN
SIDEWALK IS 6'
WIDE OR LESS)

GENERAL NOTES:

1. FORMS SHALL BE OF WOOD OR METAL AND SHALL EXTEND FOR THE FULL DEPTH OF THE CONCRETE, SEE SECTION 8–14.3(2).
2. ALL FORMS SHALL BE STRAIGHT, FREE FROM WARP AND OF SUFFICIENT STRENGTH TO RESIST THE PRESSURE OF THE CONCRETE WITHOUT SPRING.
3. WHERE D/W EXCEEDS 16' WIDTH A 2" DEEP EXPANSION JOINT SHALL BE PLACED TRANSVERSLY, CENTERED IN WALK.
4. FORM AND SUBGRADE INSPECTION ARE REQUIRED BEFORE POURING CONCRETE.
5. DRIVEWAYS SHALL BE 6" THICK. MIN. SIDEWALK AND DRIVEWAY APRON SHALL BE 6" THICK MIN. THROUGH DRIVEWAY SECTION.
6. SIDEWALK CROSS SLOPE 1% MIN. TO MAX. 2%.

DG4–7.DWG

CITY OF LACEY, WASHINGTON
DEPT. OF PUBLIC WORKS

CEMENT CONCRETE DRIVEWAY

APPROVED	DWG. NO.
Roger A Schoessel CITY ENGINEER	4–7

DES.	DWN.	CKD.	DATE
WHO	WHO	MAH	12/15/2014

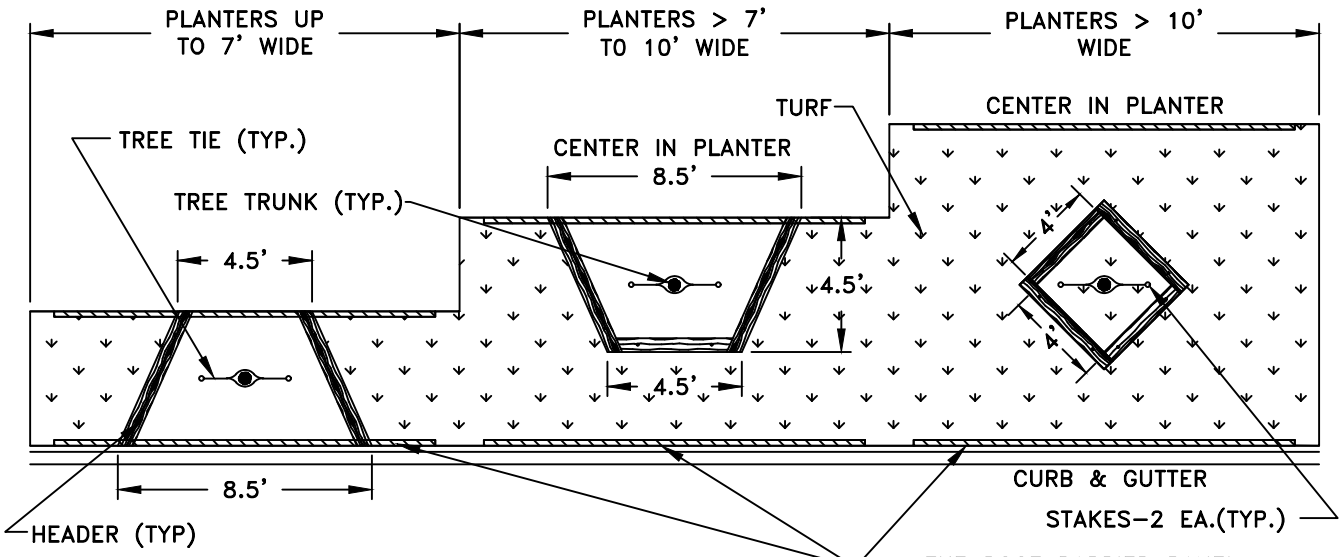

THE ROOT BARRIER PANEL EP-2450 (24"H X 24"L) BY NDS OR APPROVED EQUAL SHALL BE INSTALLED 15' ON CENTER AND 4" BELOW THE FINISH GRADE 28" DEEP ON BOTH SIDES OF THE TREE.

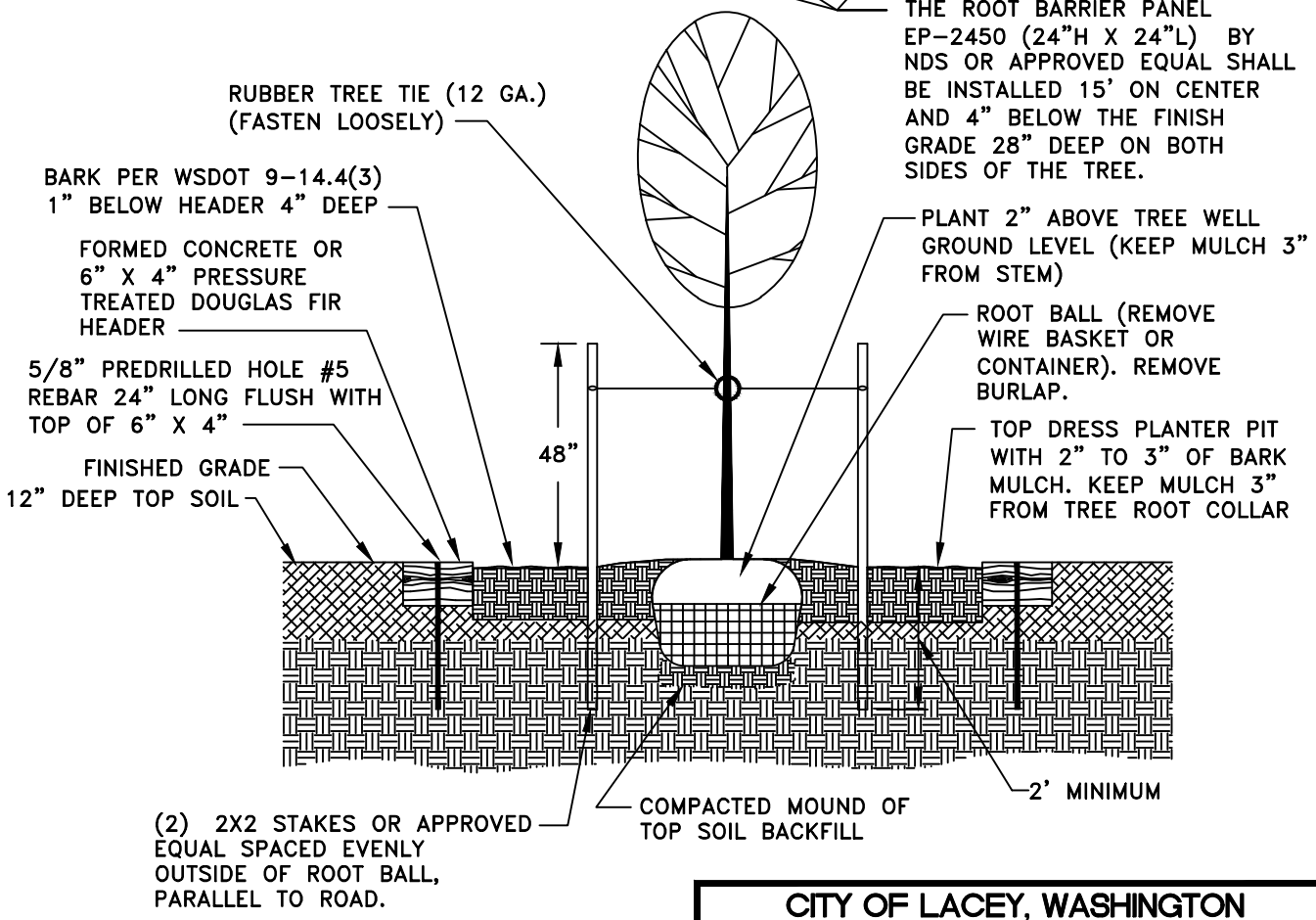

GENERAL NOTES:

1. THE ROOT BARRIER PANEL EP-2450 (24"H X 24"L) BY NDS OR APPROVED EQUAL SHALL BE INSTALLED 15' ON CENTER AND 4" BELOW THE FINISH GRADE 28" DEEP ON BOTH SIDES OF THE TREE.
2. EACH HEADER SHALL BE SECURED WITH TWO #5 REBAR.
3. ENSURE ROOTS ARE COVERED WITH SOIL.

DG4-29.DWG

CITY OF LACEY, WASHINGTON DEPT. OF PUBLIC WORKS			
TREE PLANTER AND BARRIER IN PLANTER STRIP			
APPROVED CITY ENGINEER			DWG. NO. 4-29
DES LRW	DWN WHO	CKD PDM	DATE 08/24/2017

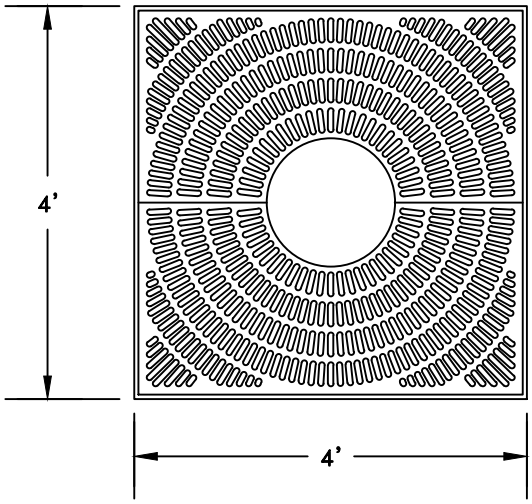

GRATE NOTES:
1. OPENING FOR TREE SHALL BE 16 INCHES.
2. GRATES SHALL BE CAST IN TWO PIECES.
3. NO OPENING IN GRATE DESIGN SHALL BE GREATER THAN 1/2".
4. GRATE SHALL BE CAST IRON PER ASTM A48 CLASS 35b OR BETTER.
5. GRATE SHALL BE 4' SQUARE FAN" BY URBAN ACCESSORIES " OR APPROVED EQUAL. GRATES SHALL BE INSTALLED WITH BRACKETS AND/OR FRAMES PER THE MANUFACTURER'S RECOMMENDATION. ALL GRATES SHALL MEET ADA STANDARDS.

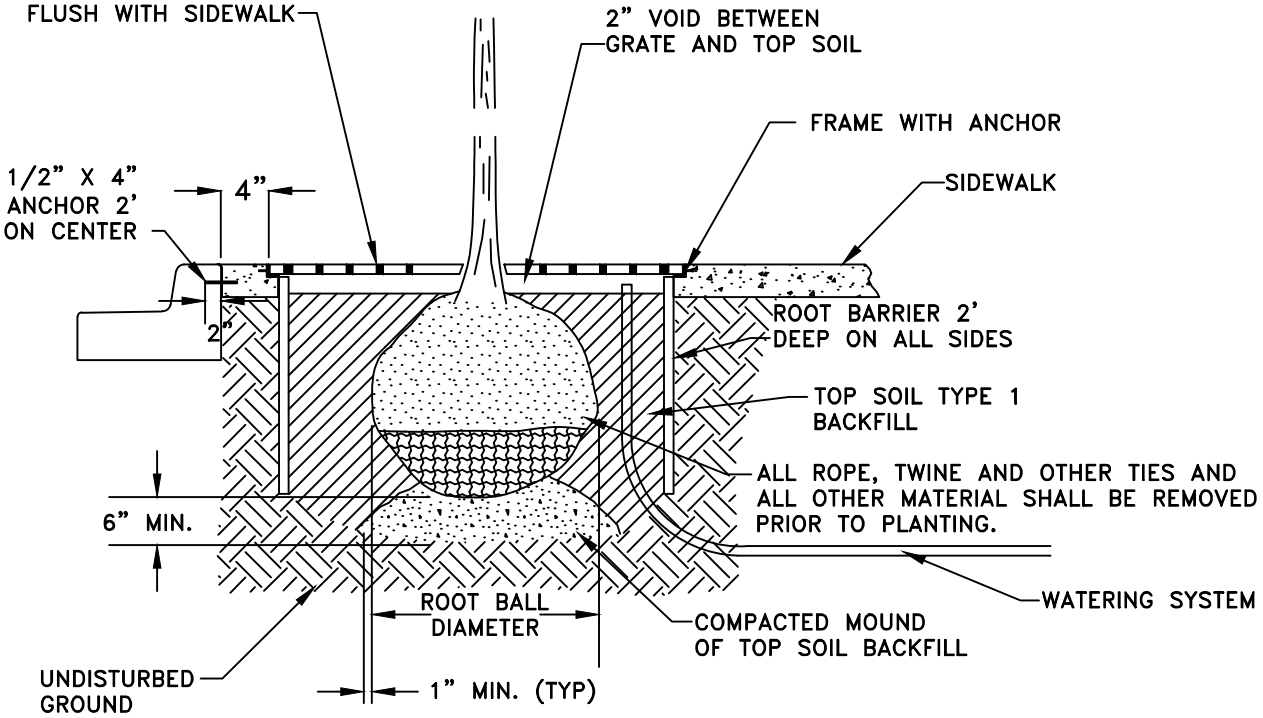

GENERAL NOTES:
1. INSTALL A 1/2" X 4" ANCHOR TO SUPPORT SIDEWALK AT THE BACK OF CURB. THE ANCHOR SHALL BE DRILLED 2" INTO THE BACK OF THE CURB AND GLUED IN PLACE.
2. THE IRRIGATION PIPE SHALL BE CONNECTED TO A SYSTEM BACK OF THE SIDEWALK.
3. THE ROOT BARRIER SHALL MEET THE REQUIREMENTS IN DETAIL 4-29.
4. FOR TOP SOIL REQUIREMENTS SEE SECTION 4B.125 LANDSCAPE/PLANTER AREAS TOPSOIL TYPE 1.
5. ENSURE ROOTS ARE COVERED WITH SOIL.

CITY OF LACEY, WASHINGTON
DEPT. OF PUBLIC WORKS

TREE WELL AND GRATE

APPROVED
CITY ENGINEER

DWG. NO. 4-30

DES	DWN	CKD	DATE
MAH	WHO	PDM	08/24/2017

DG4-30.DWG

F
SITE PHOTOS

1P

STOP

7747

7929
37.5

G

PREVAILING WAGE RATES

PREVAILING WAGE RATES

The following wage rates are in effect for this project.

State of Washington
Department of Labor and Industries
Washington State Prevailing Wage Rates For Public Works Contracts

Thurston County Rates For All Trades

Effective: June 23rd, 2022, including any corrections issued by Labor and Industries prior to bid.

Wage Rates and the Benefit Code Key may be found at:
https://fortress.wa.gov/lni/wagelookup/prvWagelookup.aspx

Supplemental to State Wage Rates may be found at:
http://www.wsdot.wa.gov/Design/ProjectDev/WageRates/default.htm

A copy is also available for viewing at the City of Lacey Public Works Engineering office located at 420 College St SE, Lacey, WA 98503. If requested, a hard copy will be mailed to you.