CITY OF LACEY

BEACHCREST WELLFIELD pH IMPROVEMENTS

LACEY CONTRACT NO. PW2019-29

LACEY DRAWING NO. D-20-30

THURSTON COUNTY PROJECT NO. 2020104803

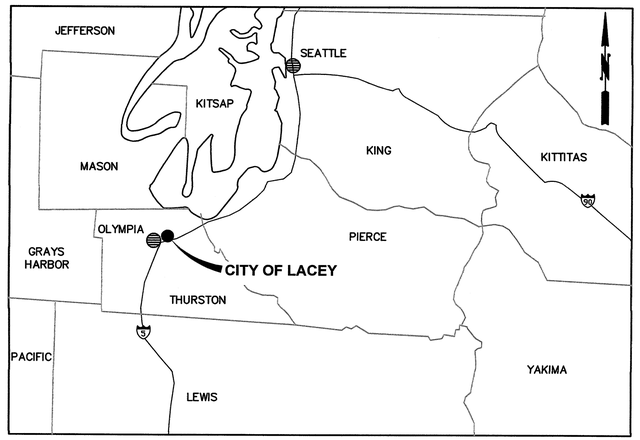

VICINITY MAP

NOT TO SCALE

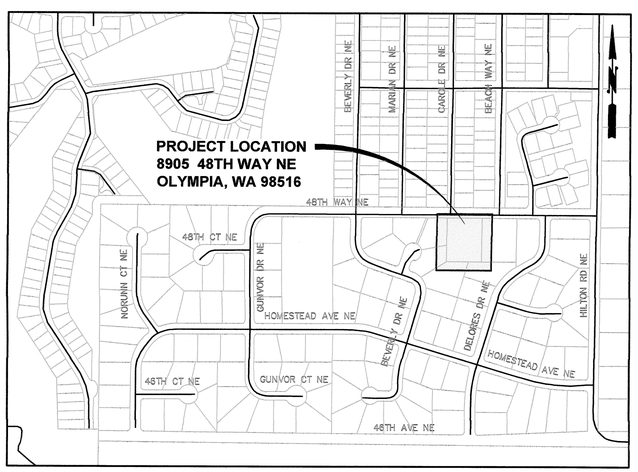

LOCATION MAP

SCALE: 1"=400'

CITY OF LACEY

CITY OFFICIALS:

MAYOR:	**ANDY RYDER**
DEPUTY MAYOR:	**MALCOLM MILLER**
CITY MANAGER:	**SCOTT SPENCE**
CITY ATTORNEY:	**DAVID SCHNEIDER**
CITY ENGINEER:	**AUBREY COLLIER, P.E./S.E.**
DIRECTOR OF PUBLIC WORKS:	**SCOTT EGGER, P.E.**
CITY COUNCIL:	**LENNY GREENSTEIN**
	MICHAEL STEADMAN
	CAROLYN COX
	ED KUNKEL
	ROBIN VASQUEZ

Scott Egger 11/17/22

DIRECTOR OF PUBLIC WORKS DATE

Gray & Osborne, Inc.

CONSULTING ENGINEERS

1130 RAINIER AVENUE SOUTH SUITE 300
SEATTLE, WASHINGTON 98144

SHEET INDEX

SHEET NO.	DESCRIPTION
GENERAL	
G-1	VICINITY MAP, LOCATION MAP, AND SHEET INDEX
G-2	ABBREVIATIONS, GENERAL SYMBOLS, SYMBOL LEGEND AND GENERAL NOTES
G-3	PROCESS FLOW DIAGRAM AND DESIGN CRITERIA
G-4	SURVEY CONTROL PLAN
G-5	EXISTING SITE PLAN
G-6	SITE DEMOLITION AND TESC PLAN
G-7	BUILDING DEMOLITION DETAILS
G-8	BUILDING DEMOLITION DETAILS
G-9	PROPOSED SITE PLAN
G-10	PROPOSED WATER PIPING PLAN
G-11	PROPOSED STORM PIPING PLAN
G-12	GRADING, LANDSCAPING, AND SURFACE RESTORATION PLAN
G-13	IRRIGATION PLAN AND DETAILS
G-14	GENERAL DETAILS
G-15	GENERAL DETAILS
G-16	GENERAL DETAILS
G-17	GENERAL DETAILS
G-18	GENERAL DETAILS
G-19	TESC NOTES
G-20	STORMWATER PLAN, SECTION, AND DETAILS
MECHANICAL	
M-1	GENERAL SYMBOLS AND SYMBOL LEGEND
M-2	S15R BUILDING PLAN
M-3	S15R BUILDING SECTIONS AND DETAILS
M-4	S15R BUILDING SECTIONS AND DETAILS
M-5	S15R MODIFICATIONS AND DETAILS
M-6	S16 MODIFICATIONS AND DETAILS
M-7	S16 MODIFICATIONS AND DETAILS
M-8	WELL MODIFICATIONS AND DETAILS
M-9	MECHANICAL DETAILS
M-10	MECHANICAL DETAILS
HVAC	
H-1	HVAC NOTES AND DETAILS
H-3	HVAC FLOOR PLAN
H-3	HVAC FLOOR PLAN
PLUMBING	
P-1	PLUMBING NOTES AND DETAILS
P-2	PLUMBING AND DRAINAGE PLAN
STRUCTURAL	
S-1	GENERAL STRUCTURAL NOTES
S-2	SPECIAL INSPECTION SCHEDULE, SUPPLEMENTAL STRUCTURAL ABBREVIATIONS, AND STRUCTURAL LEGEND
S-3	TYPICAL DETAILS
S-4	TYPICAL DETAILS
S-5	FOUNDATION AND FLOOR PLANS
S-6	CMU WALL AND ROOF FRAMING PLANS
S-7	ELEVATIONS
S-8	DETAILS
S-9	DETAILS
S-10	S16 BUILDING CONCRETE PAD PLAN AND SECTION

SHEET INDEX

SHEET NO.	DESCRIPTION
ELECTRICAL	
E-1	ELECTRICAL SYMBOLS, ABBREVIATIONS AND WORK SUMMARY
E-2	SHEET LIST AND TAG LIST
E-3	ELECTRICAL SITE PLAN
E-4	ONELINE DIAGRAM
E-5	ONELINE DIAGRAM
E-6	GROUNDING ONELINE DIAGRAM
E-7A	BUILDING S15R, SOUTH – POWER, CONTROL AND INSTRUMENTATION PLAN
E-7B	BUILDING S15R, NORTH – POWER, CONTROL AND INSTRUMENTATION PLAN
E-8	BUILDING S15R LIGHTING AND RECEPTACLE PLAN
E-9	BUILDING S15R HVAC, FIRE AND SECURITY PLAN
E-10	S16 ELECTRICAL PLAN AND DETAILS
E-11	[PB 01] SCHEDULE, SPECIFICATIONS AND LOAD DISTRIBUTION
E-12	MCCN AND MCCS ELEVATIONS
E-13	MOTOR STARTER NOTES
E-14A	MOTOR STARTER ELEMENTARY WIRING DIAGRAM
E-14B	MOTOR STARTER ELEMENTARY WIRING DIAGRAM
E-15A	MOTOR STARTER ELEMENTARY WIRING DIAGRAM
E-15B	MOTOR STARTER ELEMENTARY WIRING DIAGRAM
E-16	[CP 01] CONTROL PANEL EXTERIOR ELEVATION
E-17	[CP 01] CONTROL PANEL INTERIOR ELEVATION
E-18	CONTROL PANEL ELEMENTARY WIRING DIAGRAM
E-19	CONTROL PANEL ELEMENTARY WIRING DIAGRAM
E-20	CONTROL PANEL ELEMENTARY WIRING DIAGRAM
E-21	ANALOG LOOP DIAGRAM
E-22	ANALOG LOOP DIAGRAM
E-23	ANALOG LOOP DIAGRAM
E-24	ANALOG LOOP DIAGRAM
E-25	PLC I/O TABLES
E-26	PLC I/O TABLES
E-27	NETWORK DIAGRAM
EC-1	CABLE AND CONDUIT SCHEDULES
EC-2	CABLE AND CONDUIT SCHEDULES
ED-1	ELECTRICAL DETAILS
ED-2	ELECTRICAL DETAILS
ED-3	ELECTRICAL DETAILS
ED-4	ELECTRICAL DETAILS

JOB NO.: 19520

DWG:G_VICL_INDEX

CITY OF LACEY

BEACHCREST WELLFIELD pH IMPROVEMENTS

LACEY CONTRACT NO. PW2019-29

LACEY DRAWING NO. D-20-30

THURSTON COUNTY PROJECT NO. 2020104803

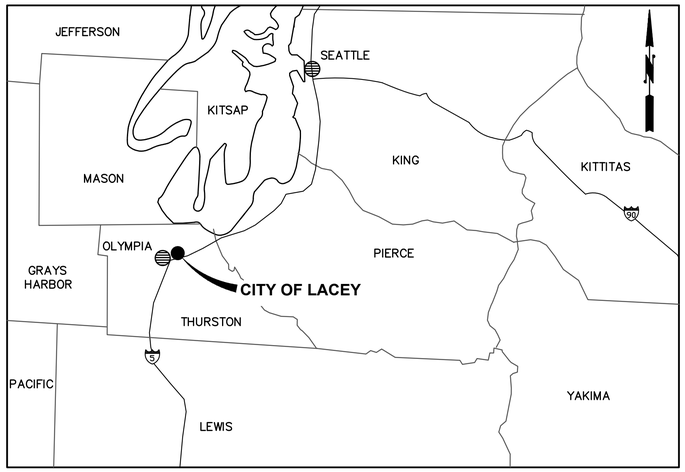

VICINITY MAP

NOT TO SCALE

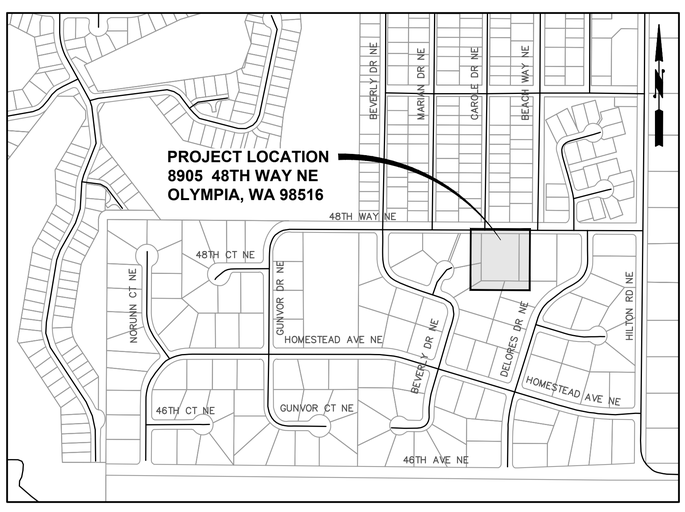

LOCATION MAP

SCALE: 1"=400'

CITY OFFICIALS:

MAYOR: ANDY RYDER
DEPUTY MAYOR: MALCOLM MILLER
CITY MANAGER: SCOTT SPENCE
CITY ATTORNEY: DAVID SCHNEIDER
CITY ENGINEER: AUBREY COLLIER, P.E./S.E.

DIRECTOR OF PUBLIC WORKS: SCOTT EGGER, P.E.
CITY COUNCIL: LENNY GREENSTEIN
MICHAEL STEADMAN
CAROLYN COX
ED KUNKEL
ROBIN VASQUEZ

DIRECTOR OF PUBLIC WORKS DATE

Gray & Osborne, Inc.
CONSULTING ENGINEERS
1130 RAINIER AVENUE SOUTH SUITE 300
SEATTLE, WASHINGTON 98144

SHEET INDEX

SHEET NO.	DESCRIPTION
GENERAL	
G-1	VICINITY MAP, LOCATION MAP, AND SHEET INDEX
G-2	ABBREVIATIONS, GENERAL SYMBOLS, SYMBOL LEGEND AND GENERAL NOTES
G-3	PROCESS FLOW DIAGRAM AND DESIGN CRITERIA
G-4	SURVEY CONTROL PLAN
G-5	EXISTING SITE PLAN
G-6	SITE DEMOLITION AND TESC PLAN
G-7	BUILDING DEMOLITION DETAILS
G-8	BUILDING DEMOLITION DETAILS
G-9	PROPOSED SITE PLAN
G-10	PROPOSED WATER PIPING PLAN
G-11	PROPOSED STORM PIPING PLAN
G-12	GRADING, LANDSCAPING, AND SURFACE RESTORATION PLAN
G-13	IRRIGATION PLAN AND DETAILS
G-14	GENERAL DETAILS
G-15	GENERAL DETAILS
G-16	GENERAL DETAILS
G-17	GENERAL DETAILS
G-18	GENERAL DETAILS
G-19	TESC NOTES
G-20	STORMWATER PLAN, SECTION, AND DETAILS
MECHANICAL	
M-1	GENERAL SYMBOLS AND SYMBOL LEGEND
M-2	S15R BUILDING PLAN
M-3	S15R BUILDING SECTIONS AND DETAILS
M-4	S15R BUILDING SECTIONS AND DETAILS
M-5	S15R MODIFICATIONS AND DETAILS
M-6	S16 MODIFICATIONS AND DETAILS
M-7	S16 MODIFICATIONS AND DETAILS
M-8	WELL MODIFICATIONS AND DETAILS
M-9	MECHANICAL DETAILS
M-10	MECHANICAL DETAILS
HVAC	
H-1	HVAC NOTES AND DETAILS
H-3	HVAC FLOOR PLAN
H-3	HVAC FLOOR PLAN
PLUMBING	
P-1	PLUMBING NOTES AND DETAILS
P-2	PLUMBING AND DRAINAGE PLAN
STRUCTURAL	
S-1	GENERAL STRUCTURAL NOTES
S-2	SPECIAL INSPECTION SCHEDULE, SUPPLEMENTAL STRUCTURAL ABBREVIATIONS, AND STRUCTURAL LEGEND
S-3	TYPICAL DETAILS
S-4	TYPICAL DETAILS
S-5	FOUNDATION AND FLOOR PLANS
S-6	CMU WALL AND ROOF FRAMING PLANS
S-7	ELEVATIONS
S-8	DETAILS
S-9	DETAILS
S-10	S16 BUILDING CONCRETE PAD PLAN AND SECTION

SHEET INDEX

SHEET NO.	DESCRIPTION
ELECTRICAL	
E-1	ELECTRICAL SYMBOLS, ABBREVIATIONS AND WORK SUMMARY
E-2	SHEET LIST AND TAG LIST
E-3	ELECTRICAL SITE PLAN
E-4	ONELINE DIAGRAM
E-5	ONELINE DIAGRAM
E-6	GROUNDING ONELINE DIAGRAM
E-7A	BUILDING S15R, SOUTH – POWER, CONTROL AND INSTRUMENTATION PLAN
E-7B	BUILDING S15R, NORTH – POWER, CONTROL AND INSTRUMENTATION PLAN
E-8	BUILDING S15R LIGHTING AND RECEPTACLE PLAN
E-9	BUILDING S15R HVAC, FIRE AND SECURITY PLAN
E-10	S16 ELECTRICAL PLAN AND DETAILS
E-11	[PB 01] SCHEDULE, SPECIFICATIONS AND LOAD DISTRIBUTION
E-12	MCCN AND MCCS ELEVATIONS
E-13	MOTOR STARTER NOTES
E-14A	MOTOR STARTER ELEMENTARY WIRING DIAGRAM
E-14B	MOTOR STARTER ELEMENTARY WIRING DIAGRAM
E-15A	MOTOR STARTER ELEMENTARY WIRING DIAGRAM
E-15B	MOTOR STARTER ELEMENTARY WIRING DIAGRAM
E-16	[CP 01] CONTROL PANEL EXTERIOR ELEVATION
E-17	[CP 01] CONTROL PANEL INTERIOR ELEVATION
E-18	CONTROL PANEL ELEMENTARY WIRING DIAGRAM
E-19	CONTROL PANEL ELEMENTARY WIRING DIAGRAM
E-20	CONTROL PANEL ELEMENTARY WIRING DIAGRAM
E-21	ANALOG LOOP DIAGRAM
E-22	ANALOG LOOP DIAGRAM
E-23	ANALOG LOOP DIAGRAM
E-24	ANALOG LOOP DIAGRAM
E-25	PLC I/O TABLES
E-26	PLC I/O TABLES
E-27	NETWORK DIAGRAM
EC-1	CABLE AND CONDUIT SCHEDULES
EC-2	CABLE AND CONDUIT SCHEDULES
ED-1	ELECTRICAL DETAILS
ED-2	ELECTRICAL DETAILS
ED-3	ELECTRICAL DETAILS
ED-4	ELECTRICAL DETAILS

ABBREVIATIONS

A	AIR
AB	ANCHOR BOLT
AC	ASPHALT CONCRETE
ACP	ACOUSTIC PANEL
ADJ	ADJUSTABLE
AISC	AMERICAN INSTITUTE OF STEEL CONSTRUCTION
ALTR	ALTERNATE
ALUM	ALUMINUM
ANSI	AMERICAN NATIONAL STANDARDS INSTITUTE
ASCE	AMERICAN SOCIETY OF CIVIL ENGINEERS
ASPH	ASPHALT
ASTM	AMERICAN SOCIETY OF TESTING AND MATERIALS
ASSY	ASSEMBLY
AT	AERATION TOWER
AVE	AVENUE
AWS	AMERICAN WELDING SOCIETY
BGS	BELOW GROUND SURFACE
BI	BLACK IRON
BLD FLG	BLIND FLANGE
BLDG	BUILDING
BLK	BLOCK
BOD	BOTTOM OF DUCT
BOW	BOTTOM OF WALL
BTWN	BETWEEN
C	CONDUIT
CAP	CORRUGATED ALUMINUM PIPE
CB	CATCH BASIN
CFM	CUBIC FEET PER MINUTE
CI	CAST IRON
CL	CLASS
℄	CENTER LINE
CLR	CLEARANCE
CMP	CORRUGATED METAL PIPE
CMU	CONCRETE MASONRY UNIT
CO	CLEANOUT
CONC	CONCRETE
CONN	CONNECTION
CONT	CONTRACTOR
CONV	CONVEYOR
CPLG	COUPLING
CONTIN	CONTINUED
COP	COPPER
CP	CORNER POST
CPTS	CATHODIC PROTECTION TEST STATION
CSH	CONCRETE SURFACE HARDENER
CTR	CENTER
D	DRAIN
DI	DUCTILE IRON
DIA	DIAMETER
DIR	DIRECTION
DISCH	DISCHARGE
DN	DOWN
DP	DIFFERENTIAL PRESSURE
E	EAST
EA	EACH
ECC	ECCENTRIC
EL	ELEVATION
ELL	ELBOW
ELEC	ELECTRICAL
EMERG	EMERGENCY
EXIST	EXISTING
EXP	EXPANSION
EW	EACH WAY
FAB	FABRICATED
FCA	FLANGED COUPLING ADAPTER
FD	FLOOR DRAIN
FF	FACTORY FINISH, FINISHED FLOOR
FIG	FIGURE
FIN	FINISHED
FL	FLANGE
FLL	FLOW LINE
FLEX	FLEXIBLE
FLR	FLOOR
FM	FORCE MAIN
FPM	FEET PER MINUTE
FRP	FIBERGLASS REINFORCED PLASTIC
FT	FEET
FT^2	SQUARE FEET
GA	GAUGE
GALV	GALVANIZED
GEN	GENERAL
GI	GALVANIZED IRON
GOVT	GOVERNMENT
GPD	GALLONS PER DAY
GPM	GALLONS PER MINUTE
GRD	GRADE
GRV	GROOVED PIPE OR COUPLING
GSP	GALVANIZED STEEL PIPE
GV	GATE VALVE
GWB	GYPSUM WALL BOARD
H	HEIGHT
HEX	HEXAGONAL
HMA	HOT MIX ASPHALT
HORIZ	HORIZONTAL
HP	HORSEPOWER
HR	HOUR
HDPE	HIGH DENSITY POLYETHYLENE
ID	INSIDE DIAMETER
IE	INVERT ELEVATION
INF	INFLUENT
INV	INVERT
J BOX	JUNCTION BOX
L	LENGTH
LB	POUND
LB/HR	POUNDS PER HOUR
LF	LINEAR FEET
MAG	MAGNETIC
MAX	MAXIMUM
MDO	MEDIUM DENSITY OVERLAY
MECH	MECHANICAL
MFGR, MFR	MANUFACTURER
MGD	MILLION GALLONS PER DAY
MG/L	MILLIGRAM PER LITER
MH	MANHOLE
MIN	MINIMUM
MJ	MECHANICAL JOINT
MO	MID ORDINATE
N	NORTH
No.	NUMBER
NTS	NOT TO SCALE
OC	ON CENTER
OD	OUTSIDE DIAMETER
OPNG	OPENING
OPP	OPPOSITE
OSHA	OCCUPATIONAL SAFETY AND HEALTH ADMINISTRATION
PE	PLAIN END
PERF	PERFORATED
PL	PLATE
PLYWD	PLYWOOD
POT	POTABLE
PRV	PRESSURE REDUCING VALVE
PPG	POTASSIUM PERMANGANATE
PSF	POUNDS PER SQUARE FOOT
PSI	POUNDS PER SQUARE INCH
PSIG	POUNDS PER SQUARE INCH GAUGE
PTS	PAINTED SURFACE
PVC	POLYVINYL CHLORIDE
PVMT	PAVEMENT
PWR	POWER
QT	QUARTER
QUAD	QUADRANT
R	RADIUS
RD	ROOF DRAIN
RED	REDUCER
REINF	REINFORCE
REQD	REQUIRED
RESTL	REINFORCING STEEL
RM	ROOM
RO	ROUGH OPENING
R/W	RIGHT-OF-WAY
S	SOUTH,
SCH	SCHEDULE
SF	SQUARE FEET
SFN	SURVEY FOUND NAIL
SHC	SODIUM HYPOCHLORITE
SHT	SHEET
SL	SLOPE
SP	STATIC PRESSURE
SPECS	SPECIFICATIONS
SQ	SQUARE
SS	STAINLESS STEEL
SSNT	SURVEY SET NAIL/TAG
STA	STATION
STD	STANDARD
STL	STEEL
STRG	STRONG
SUC	SUSPENDED CEILING
SUP	SUPPORT
TAPD	TAPERED
TB	TOP AND BOTTOM
TC	TOP OF CURB
TDH	TOTAL DYNAMIC HEAD
TEL	TELEPHONE
THK	THICK
THRD	THREADED
THRU	THROUGH
TK	TANK
TOC	TOP OF CONCRETE
TOW	TOP OF WALL
TRANS	TRANSISTOR
TYP	TYPICAL
UGE	UNDERGROUND ELECTRICAL
UPH	UNDERGROUND PHONE
VC	VERTICAL CURVE
VERT	VERTICAL
VFD	VARIABLE FREQUENCY DRIVE
VIS	VINYL SHEET
W	WIDTH, WEST
W/	WITH
WC	WATER COLUMN
WD	WIDE
WLD	WELDED
W/O	WITHOUT
WS	WATER SURFACE
WWM	WELDED WIRE MESH
WWF	WELDED WIRE FABRIC

GENERAL SYMBOLS

1/4" FT.	SLOPE 1/4" PER FOOT		SQUARE SECTION
	FLOW DIRECTION		PIPE SECTION
	OPENING	@	SPACING CENTER ON CENTER
	GROUND	#	SIZE OF DEFORMED BAR
	ASPHALT SECTION	ø	DIAMETER
	CONCRETE SECTION		RECTANGULAR SECTION
	WATER SURFACE	∠	ANGLE
	ELEVATION REFERENCE POINT	W	WIDE-FLANGE SHAPE
	LEGEND/NOTE CALL OUTS	C	CHANNEL
	PIPE SUPPORT	PL	PLATE
	ELECTRICAL MAST	℄	CENTER LINE

EXAMPLE OF SECTION NUMBERING SYSTEM AND PLAN/DRAWING TITLES

FOR DETAILS SUBSTITUTE DETAIL NUMBER FOR SECTION LETTER

ELEVATION VIEW ON SHT. M-1 — A / M-1

SECTION CUT ON SHT. M-1 — A / M-1 — SECTION LETTER OR DETAIL NUMBER; SHT. ON WHICH SECTION OR DETAIL APPEARS

ON SHT. M-2 THIS SECTION IS IDENTIFIED AS:

SECTION — A / M-1 — SECTION LETTER OR DETAIL NUMBER; SHT. FROM WHICH SECTION OR DETAIL WAS TAKEN

SCALE: ?"=1'-0"

A / – — SECTION LETTER OR DETAIL NUMBER; SECTION APPEARS ON SAME DWG AS CUT

A / TYP — SECTION LETTER OR DETAIL NUMBER; SECTION IS TYPICAL TO MANY PLACES

DETAILS ARE REFERENCED IN A SIMILAR MANNER EXCEPT NUMBERS ARE USED INSTEAD OF LETTERS

DRAWING TITLE IDENTIFICATION : **DRAWING TITLE**

SCALE: ?"=1'-0"

GENERAL NOTES:

1. IN GENERAL, EXISTING STRUCTURES AND FACILITIES ARE NOTED AS "EXISTING" AND ARE SHOWN IN LIGHT LINE WEIGHTS OR AS SCREENED BACKGROUND. NEW CONSTRUCTION, STRUCTURES, FACILITIES, AND FEATURES ARE SHOWN IN HEAVY LINE WEIGHTS.
2. MANY OF THE SYMBOLS SHOWN ON THIS LEGEND ARE USED ONLY WHERE THEY PROVIDE CLARITY AND ARE NOT NECESSARILY USED IN ALL APPLICATIONS. SOME CONTRACT DRAWINGS MAY HAVE ADDITIONAL LEGENDS APPLICABLE FOR THAT SPECIFIC DRAWING. SYMBOLS SHOWN ON SPECIFIC DRAWINGS GOVERN.
3. THE CONTRACTOR SHALL VERIFY ALL PLANIMETRIC FEATURES AND DIMENSIONS PRIOR TO STARTING WORK AND SHALL NOTIFY THE ENGINEER OF ANY DISCREPANCIES.
4. ALL DIMENSIONS SHOWN ON THE CONTRACT DRAWINGS AND DESCRIBED IN THE SPECIFICATIONS REFER TO THE HORIZONTAL AND VERTICAL PROJECTED PLANES, UNLESS OTHERWISE INDICATED.
5. NO CONSTRUCTION RELATED ACTIVITY SHALL CONTRIBUTE TO THE DEGRADATION OF THE ENVIRONMENT, ALLOW MATERIAL TO ENTER SURFACE OR GROUND WATERS, OR ALLOW PARTICULATE EMISSIONS TO THE ATMOSPHERE, WHICH EXCEED STATE OR FEDERAL STANDARDS.
6. FOR QUESTIONS REGARDING THE WORK OUTLINED IN THESE PLANS AS WELL AS THE PROJECT SPECIFICATIONS, PLEASE CONTACT THE CITY OF LACEY AT (360) 491-5600.

SYMBOL LEGEND

EXISTING	PROPOSED	
		CONCRETE SURFACING
		ASPHALT SURFACING
		GRAVEL SURFACING
E	E	ELECTRICAL
W	W	WATER
D	D	DRAIN
		PROPERTY LINE
		DITCH
X	X	FENCE
		CLEARING LIMITS
		SILT FENCE
		CENTER LINE
		MANHOLE/DRYWELL
		GATE VALVE
		WATER METER
		LUMINAIRE
20	20	CONTOUR
		MONITORING WELL
		TREE
		CONTROL POINT
		BUILDING
		FIRE HYDRANT
	B	BOLLARD

PROCESS PIPING

PIPE SIZE — 24" D — SEE SHEET M-1 FOR PROCESS AND PIPE TYPE

SHEET AREA IDENTIFICATION

DISCIPLINE — M-1 — SHEET NUMBER

Washington811 — Know what's below. Call or click before you dig. washington811.com

1-800-424-5555 OR 811.com

EXISTING UTILITIES SHOWN ARE FROM THE BEST AVAILABLE INFORMATION AND NO GUARANTEE IS MADE AS TO THE EXACT SIZE, TYPE, LOCATION OR DEPTH

0 1" 2"

TWO INCHES AT FULL SCALE. IF NOT, SCALE ACCORDINGLY

Gray & Osborne, Inc.
CONSULTING ENGINEERS
1130 RAINIER AVENUE SOUTH, SUITE 300
SEATTLE, WASHINGTON 98144

DATE: NOV 2022 | DRAWN: PGM | CHECKED: KPS | APPROVED: RLP

No.	REVISION	DATE	APPD

NEIL PHILLIP STEWART — STATE OF WASHINGTON — 52750 — REGISTERED PROFESSIONAL ENGINEER — 11/21/22

ELISSA J. PORTER — STATE OF WASHINGTON — 52563 — REGISTERED PROFESSIONAL ENGINEER — 11/21/22

CITY OF LACEY
THURSTON COUNTY WASHINGTON
BEACHCREST WELLFIELD pH IMPROVEMENTS
ABBREVIATIONS, GENERAL SYMBOLS, SYMBOL LEGEND AND GENERAL NOTES

SHEET: G-2
SHEET: 2 of 81
JOB NO.: 19520
DWG:G_LEGEND

L:\LACEY\19520 pH Predesign and S17 Facilities Design\PLANSET\G-Sheets\G_LEGEND.dwg, 11/21/2022 10:02 AM, PHILIP MARSHALL

EXISTING WELLFIELD

SOURCE 15 (S17)	
WELL DEPTH	140 FT
CASING DIAMETER	12 INCH
PUMP DEPTH	117 FT
PUMP TYPE	SUBMERSIBLE
PUMP MODEL	PEERLESS 6LB-5
PUMP ELECTRICAL	25 HP, 3-PH, 60 HZ, 3,500 RPM
RELIABLE CAPACITY	180 GPM
DRILLED	1976
REHABILITATED	2018
SOURCE 16 (S17)	
WELL DEPTH	138 FT
CASING DIAMETER	10 INCH
PUMP DEPTH	112 FT
PUMP TYPE	SUBMERSIBLE
PUMP MODEL	PEERLESS 6HXB-6
PUMP ELECTRICAL	30 HP, 3-PH, 60 HZ, 3,500 RPM
RELIABLE CAPACITY	200-220 GPM
DRILLED	1979
REHABILITATED	2018

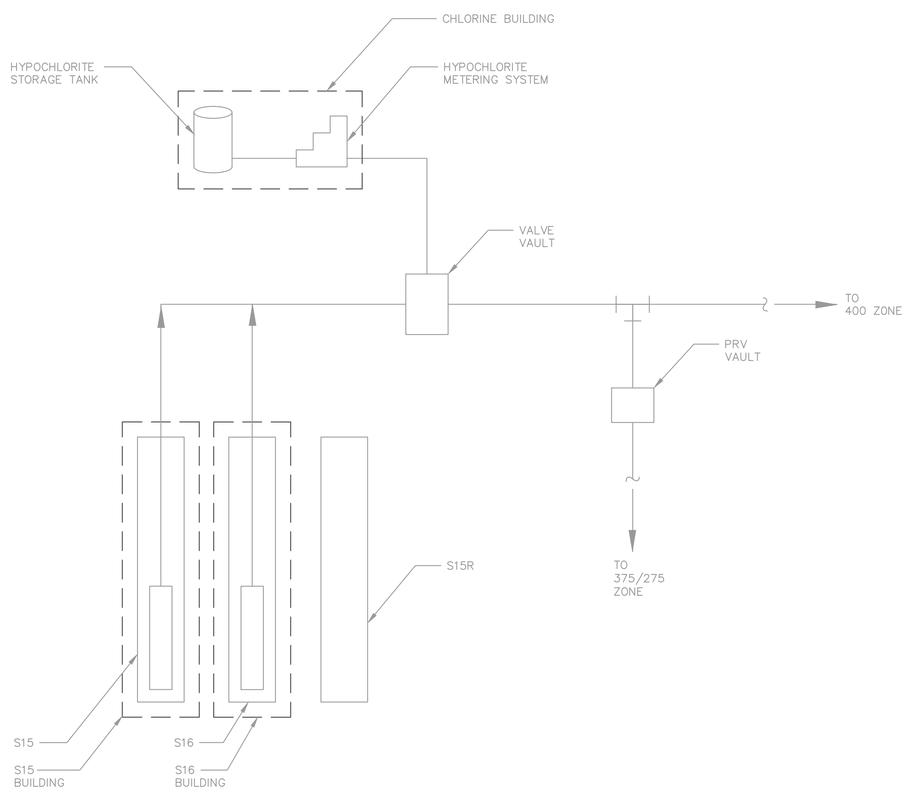

EXISTING SYSTEM

DESIGN PARAMETERS

SOURCE 15 (S17)	REMOVE EQUIPMENT & DECOMMISSION THE WELL
SOURCE 16 (S17)	
WELL DEPTH	138 FT
CASING DIAMETER	10 INCH
PUMP DEPTH	117 FT
PUMP TYPE	SUBMERSIBLE
PUMP ELECTRICAL	15 HP, 3-PH, 460VAC, 1,800 RPM
RELIABLE CAPACITY	200-220 GPM @ 130' TDH
DRILLED	1979
REHABILITATED	2018
SOURCE 15R (S17)	
WELL DEPTH	148 FT
CASING DIAMETER	20 INCH
PUMP DEPTH	118 FT
PUMP TYPE	SUBMERSIBLE
PUMP ELECTRICAL	15 HP, 3-PH, 460VAC, 1,800 RPM
RELIABLE CAPACITY	300-320 GPM @ 130' TDH
DRILLED	2016
TREATMENT	
TYPE	PACKAGE AERATION
CAPACITY	1,200 GPM
AIR:WATER RATIO	10:1
RAW pH	6.9
TARGET pH	7.6
BLOWER QUANTITY	2 (1 DUTY, 1 STANDBY)
BLOWER TYPE	CENTRIFUGAL; 800 SCFM @ 50 IN WC
BLOWER ELECTRICAL	15 HP, 3-PH, 460VAC, 3,500 RPM
BOOSTER PUMPS	
PUMP TYPE	CENTRIFUGAL
PUMP QUANTITY	2 (1 DUTY, 1 STANDBY)
PUMP CAPACITY	520 GPM @ 210 FT TDH
BOOSTER PUMP ELECTRICAL	40 HP, 60 HZ, 3-PH, 3,500 RPM

DISINFECTION	
TYPE	SODIUM HYPOCHLORITE (0.8 PERCENT)
STORAGE	VERTICAL HDPE TANK
VOLUME	500 GALLONS
PUMP QUANTITY	1
PUMP TYPE	DIAPHRAGM METERING PUMP
PUMP CAPACITY	2.9 GPH @ 100 PSI
PUMP ELECTRICAL	120 VAC, 60HZ
TARGET DOSE	1.1 mg/L
TARGET RESIDUAL	0.8 mg/L

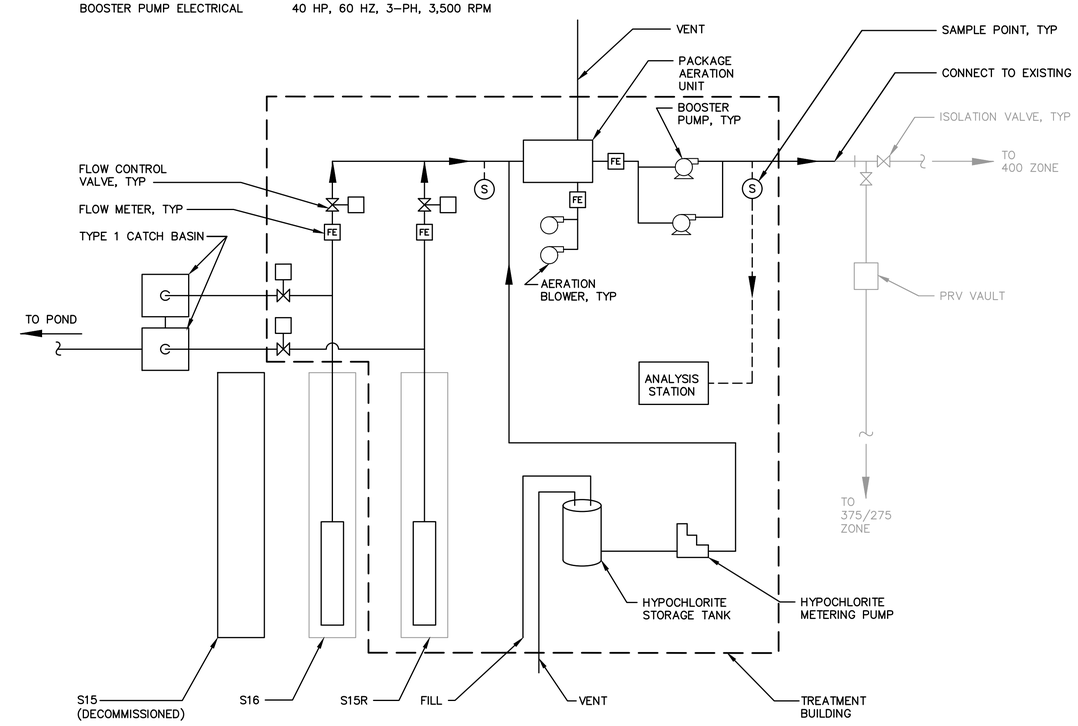

PROPOSED SYSTEM

0 1" 2"
TWO INCHES AT FULL SCALE.
IF NOT, SCALE ACCORDINGLY

Gray & Osborne, Inc.
CONSULTING ENGINEERS
1130 RAINIER AVENUE SOUTH, SUITE 300
SEATTLE, WASHINGTON 98144

DATE: NOV 2022
DRAWN: PGM
CHECKED: KPS
APPROVED: RLP

No.	REVISION	DATE	APPD

NEIL PHILLIP STEWART, STATE OF WASHINGTON, 52750, REGISTERED PROFESSIONAL ENGINEER, 11/21/22

RUSSELL L. PORTER, STATE OF WASHINGTON, 35528, REGISTERED PROFESSIONAL ENGINEER

CITY OF LACEY
THURSTON COUNTY WASHINGTON
BEACHCREST WELLFIELD pH IMPROVEMENTS
PROCESS FLOW DIAGRAM AND DESIGN CRITERIA

SHEET: G-3
SHEET: 3 of 81
JOB NO.: 19520
DWG:G_PFD

L:\LACEY\19520 pH Predesign and S17 Facilities Design\PLANSET\G-Sheets\G_PFD.dwg, 11/21/2022 10:02 AM, PHILIP MARSHALL

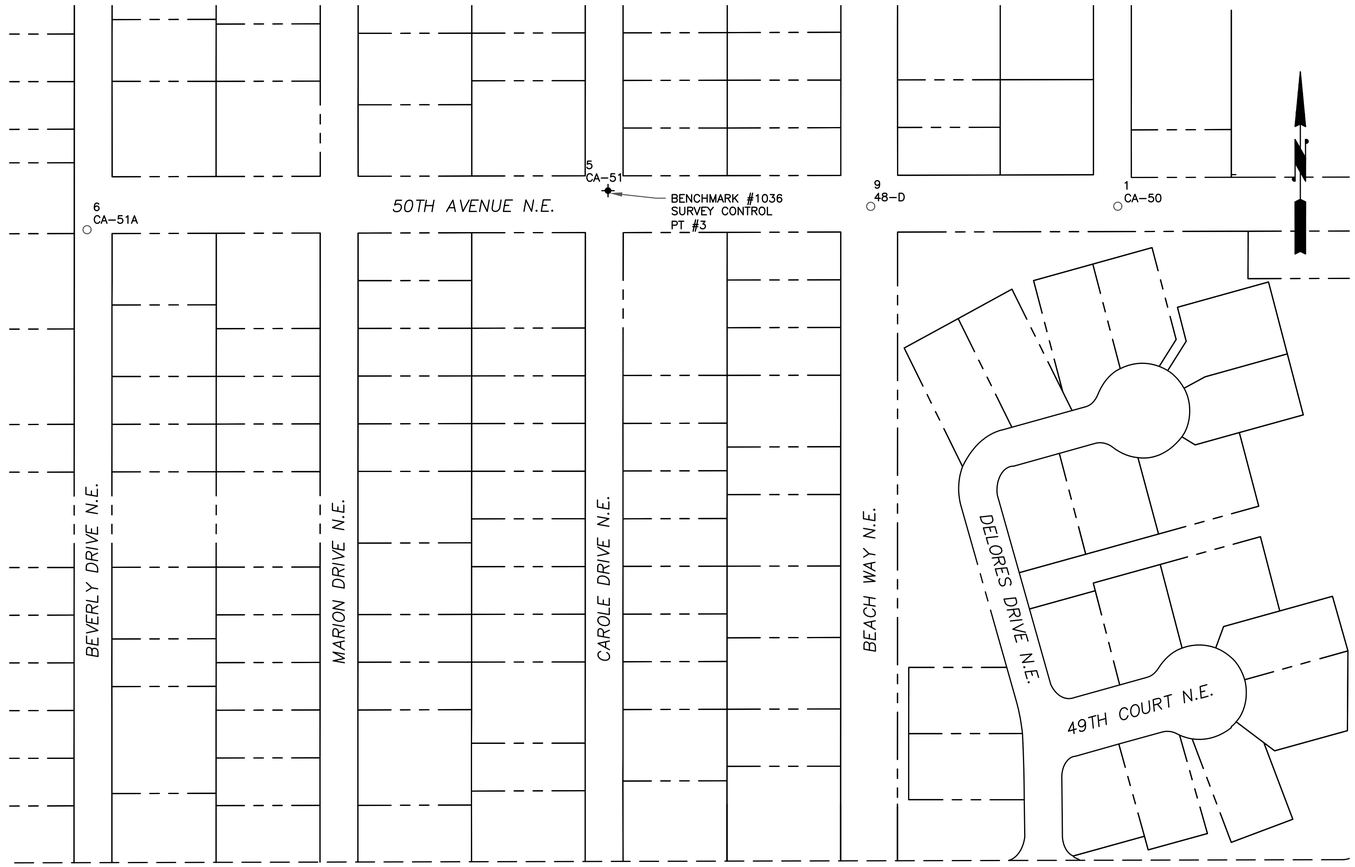

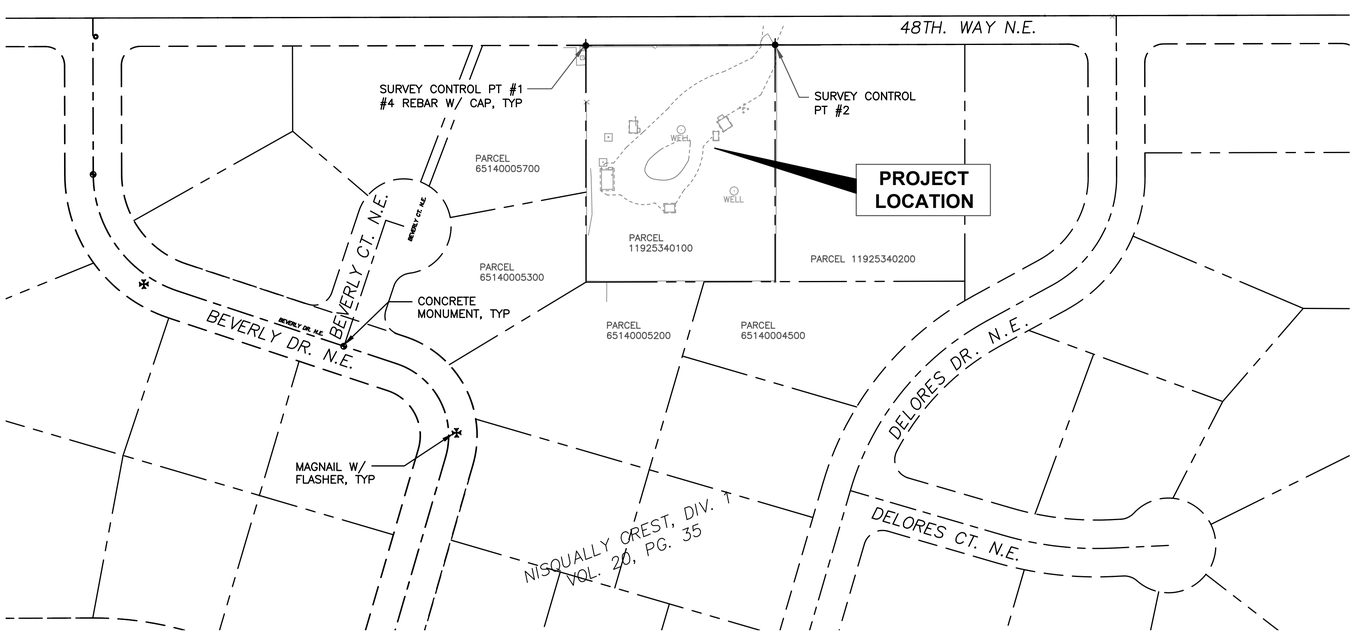

SURVEY CONTROL PLAN

SCALE: 1"=80'

SURVEY DATUM	
HORIZONTAL DATUM:	WCS 83/91
VERTICAL DATUM:	NGVD29

SURVEY CONTROL POINTS

POINT	NORTHING	EASTING	ELEVATION	DESCRIPTION
1	652,623.00*	79,826.50*	227.31	5/8" REBAR WITH CAP
2	652,616.50*	80,026.30*	223.52	5/8" REBAR WITH CAP
3	653,390.00*	79,876.80*	195.50	BENCHMARK #1036; CITY OF LACEY MONUMENT

* NORTHING AND EASTING VALUES FOR THE SURVEY CONTROL POINTS WERE NUMERICALLY EXTRAPOLATED FROM THEIR LOCATIONS IN THE SURVEY AND NOT PROVIDED DIRECTLY BY THE CITY. ALL NORTHING AND EASTING VALUES FOR SITE LOCATIONS IN THIS PLANSET ARE BASED ON THESE CALCULATED VALUES WHICH NEED TO BE VERIFIED BY THE CONTRACTOR BEFORE ANY SITE DEMOLITION OR STAKING IS PERFORMED.

SURVEY NOTES:

1. SURVEY FILE, DATUM, AND CONTROL POINTS PROVIDED BY THE CITY OF LACEY ON 3/15/2020.
2. SURVEY UTILIZES NGVD 29 VERTICAL & HORIZONTAL DATUM.
3. CONTRACTOR SHALL FIELD VERIFY DATUM AND CONTROL POINTS AS REQUIRED TO COMPLETE THE WORK.
4. ALL TREES ON LOT ARE MARKED WITH ALUMINUM ID TAG FOR BEACHCREST WELLHEAD TREE ASSESSMENT (SOUND URBAN FORESTRY LLC, 2015). SEE SPECIFICATIONS AND DEMOLITION SHEET FOR ADDITIONAL INFORMATION.
5. BENCHMARK #1036 (3" SURFACE MONUMENT) LOCATED AT INTERSECTION OF CAROLE DR. NE & 50TH AVE. NE (ELEV 195.50 FT). THIS BENCHMARK IS LOCATED APPROXIMATELY 800 FEET NORTH OF THE PROJECT LOCATION.
6. SURVEY ALSO REFERENCES PLATS AF 104004.
7. BASIS OF BEARING: MERIDIAN IS WASHINGTON COORDINATE SYSTEM OF NAD 83/91 – SOUTH ZONE DERIVED FROM TIES TO HPGN STATIONS SANDERSON, MCKENNA, AND CBL 1110 AD TO WSDOT GPS STATIONS G259R, GP34005–2, GP34005–4, GP34101–32, GP34101–39, HCS4–2, LUHR RM2, TS34–33, TS34–59, AND TO THURSTON COUNTY GPS STATIONS U–531, AT–194, AT–352, AT–355, AT–447, AT–449, AND AT–478. DISTANCES SHOWN ARE GROUND SCALE US SURVEY FEET. COMBINED SCALE FACTOR (GROUND TO GRID) IS 0.999935701. SURVEY AF#3111152 DATED 09–24–1997.
8. METHOD OF SURVEY: SURVEY PERFORMED BY CONVENTIONAL FIELD TRAVERSE USING A LEICA MS–50 (ONE SECOND TOTAL STATION), LINEAR AND ANGULAR CLOSURE OF THE TRAVERSE MEETING THE STANDARDS OF WAC 332–130–090.
9. CONTRACTOR SHALL PROTECT ALL PROPERTY CORNERS FOR THE DURATION OF CONSTRUCTION.
10. IF REQUIRED, THE CITY OF LACEY WILL RESTAKE AND RESET PROPERTY CORNER MONUMENTS.

0 1" 2"
TWO INCHES AT FULL SCALE.
IF NOT, SCALE ACCORDINGLY

Gray & Osborne, Inc.
CONSULTING ENGINEERS
1130 RAINIER AVENUE SOUTH, SUITE 300
SEATTLE, WASHINGTON 98144

DATE: NOV 2022
DRAWN: PGM
CHECKED: KPS
APPROVED: RLP

No.	REVISION	DATE	APPD

KEITH PHILLIP STEWART, STATE OF WASHINGTON, 53780, REGISTERED PROFESSIONAL ENGINEER, 11/21/22

RUSSELL L. PORTER, STATE OF WASHINGTON, 45688, REGISTERED PROFESSIONAL ENGINEER

CITY OF LACEY
THURSTON COUNTY WASHINGTON
BEACHCREST WELLFIELD pH IMPROVEMENTS
SURVEY CONTROL PLAN

SHEET: G-4
SHEET: 4 of 81
JOB NO.: 19520
DWG:G_SURVEY_CONTROL

L:\LACEY\19520 pH Predesign and S17 Facilities Design\PLANSET\G-Sheets\G_SURVEY_control.dwg, 11/21/2022 10:02 AM, PHILIP MARSHALL

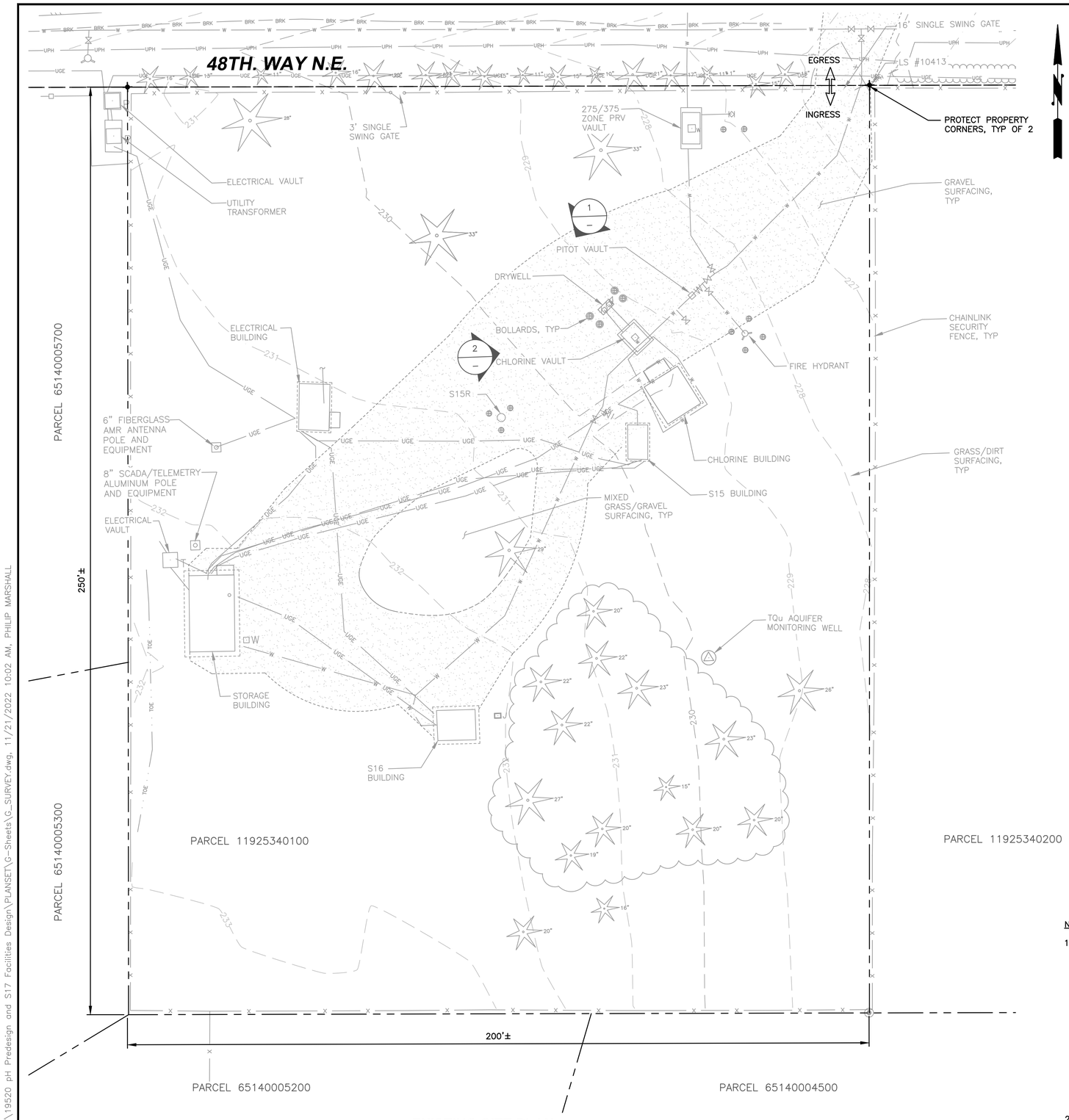

EXISTING SITE PLAN

SCALE: 1"=15'

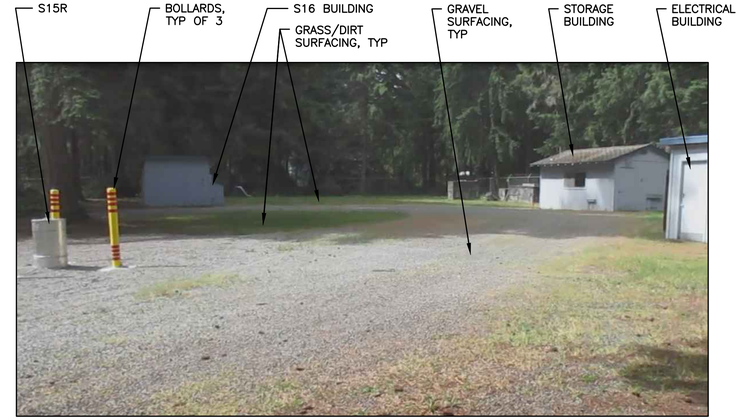

NOTES:

1. PHOTO TAKEN WEST OF CHLORINE VAULT, LOOKING SOUTHWEST.

PHOTO DETAIL: EXISTING BUILDINGS

1 / –

NOT TO SCALE

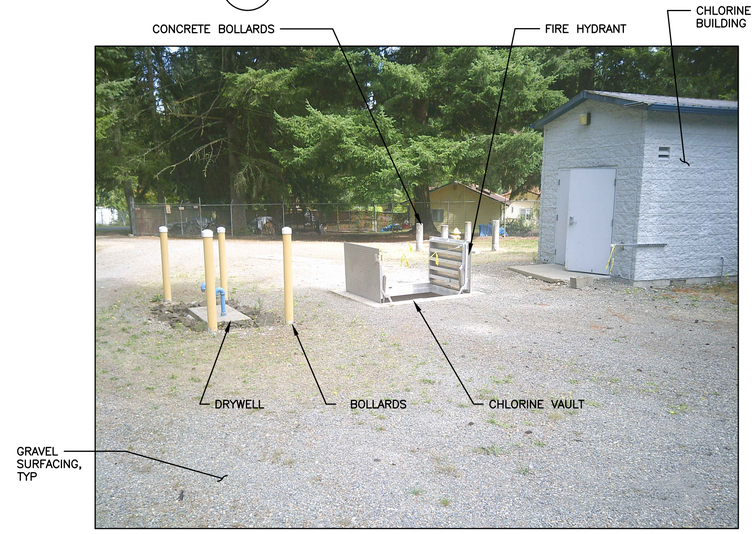

NOTES:

1. PHOTO TAKEN AT WELL S15R LOOKING NORTHEAST.

PHOTO DETAIL: EXISTING CHLORINE VAULT AND CHLORINE BUILDING

2 / –

NOT TO SCALE

NOTES:

1. EXISTING BUILDING AND SURFACING INVENTORY:

S15 BUILDING	HT (FT)=8	SF=55
S16 BUILDING	HT (FT)=8	SF=90
STORAGE BUILDING	HT (FT)=11	SF=255
ELECTRICAL BUILDING	HT (FT)=9	SF=105
CHLORINE BUILDING	HT (FT)=12	SF=125
EXISTING GRAVEL SURFACING		SF=10,238
TOTAL IMPERVIOUS SURFACING		SF=11,206
PARCEL AREA		SF=49,903
PERCENT IMPERVIOUS		22%

2. CONTRACTOR SHALL FIELD VERIFY ALL CONDITIONS AS REQUIRED TO COMPLETE THE WORK.
3. EXISTING SITE PLAN BASED ON CITY OF LACEY SURVEY COMPLETED IN MARCH 2020.

0 1" 2"

TWO INCHES AT FULL SCALE. IF NOT, SCALE ACCORDINGLY

Gray & Osborne, Inc.
CONSULTING ENGINEERS
1130 RAINIER AVENUE SOUTH, SUITE 300
SEATTLE, WASHINGTON 98144

DATE: NOV 2022	
DRAWN: PGM	
CHECKED: KPS	
APPROVED: RLP	

No.	REVISION	DATE	APPD

CITY OF LACEY
THURSTON COUNTY WASHINGTON
BEACHCREST WELLFIELD pH IMPROVEMENTS
EXISTING SITE PLAN

SHEET: G-5
SHEET: 5 of 81
JOB NO.: 19520
DWG:G_SURVEY

L:\LACEY\19520 pH Predesign and S17 Facilities Design\PLANSET\G-Sheets\G_SURVEY.dwg, 11/21/2022 10:02 AM, PHILIP MARSHALL

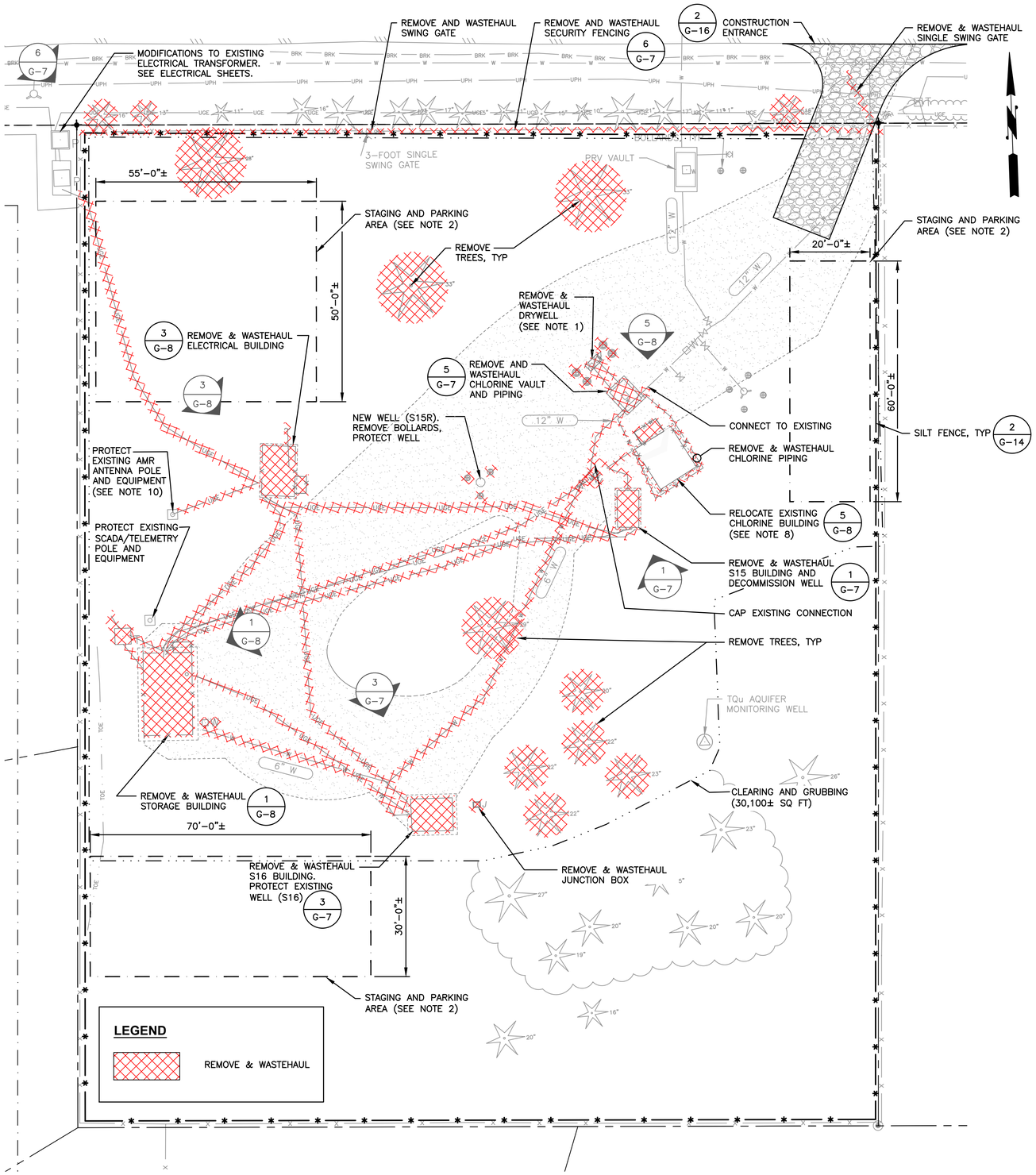

DEMOLITION AND TESC PLAN

SCALE: 1"=15'

NOTES:

1. REMOVE AND WASTEHAUL EXISTING DRYWELL, BOLLARDS, AND VERTICAL PIPING. VERTICAL PIPING INCLUDES UP TO 20 FEET OF 8-INCH DIAMETER DI PIPING.
2. STAGING AND PARKING AREA IS LIMITED TO THE AREAS SHOWN ON THE PLANS. COORDINATE/CONFIRM PARKING, EQUIPMENT STAGING, AND MATERIAL LAYDOWN WITH THE CITY PRIOR TO BEGINNING WORK.
3. CONTRACTOR SHALL COMPLY WITH ALL REQUIREMENTS FOR DEMOLITION AS REGULATED BY THE OLYMPIC REGION CLEAN AIR AGENCY (ORCAA). ALL ASSOCIATED DEMOLITION PERMITS SHALL BE THE RESPONSIBILITY OF THE CONTRACTOR. INFORMATION ON ADDITIONAL PERMITS IS PROVIDED IN THE SPECIFICATIONS.
4. ACCESS TO THE SITE SHALL BE MAINTAINED AT ALL TIMES. COORDINATE DELIVERIES AND ANY ROADWAY OBSTRUCTIONS WITH THE CITY AT LEAST 48 HOURS PRIOR.
5. THE INFORMATION ON THIS PAGE IS BASED ON CITY OF LACEY SURVEY. THE CONTRACTOR SHALL FIELD VERIFY ANY AND ALL LOCATIONS, DIMENSIONS, AND ORIENTATIONS AS REQUIRED TO SUCCESSFULLY COMPLETE THE WORK.
6. ADDITIONAL DEMOLITION NOTES MAY BE PROVIDED ON MECHANICAL, STRUCTURAL, OR ELECTRICAL SHEETS.
7. TEMPORARY EROSION AND SEDIMENT CONTROL MEASURES SHALL BE PER THURSTON COUNTY DRAINAGE DESIGN AND EROSION CONTROL MANUAL. SEE SPECIFICATION SECTION 02370 FOR ADDITIONAL INFORMATION.
8. CHLORINE BUILDING SHALL BE RELOCATED TO THE CITY'S EXISTING SOURCE 20 FACILITY LOCATED AT 8550 19TH AVE SE, LACEY, WASHINGTON, 98516.

   THE EXISTING BUILDING IS A PRECAST CONCRETE STRUCTURE, CXT #SW-249 AND WAS CAST IN APRIL, 2007. THE ESTIMATED WEIGHT OF THE BUILDING AS IT WILL BE TRANSPORTED IS APPROXIMATELY 35,000 POUNDS. THE CONTRACTOR MUST COORDINATE WITH BUILDING MANUFACTURER FOR BUILDING RELOCATION – NO OTHER VENDORS SHALL BE ALLOWED TO DIRECT RELOCATION ACTIVITIES.

   GENERALLY, THE CONTRACTOR MUST ACQUIRE SPECIALIZED BOLTS AND PLATES FROM THE BUILDING MANUFACTURER, FASTEN THEM TO THE BUILDING FOOTING USING EXISTING EMBEDED BOLT HOLES, AND USE SUITABLE LIFTING EQUIPMENT TO LIFT THE BUILDING ONTO THE HAULING VEHICLE. SPREADER BARS AND OTHER CABLE PROTECTION DEVICES ARE REQUIRED AT THE RECOMMENDATION OF THE BUILDING MANUFACTURER AND SHALL BE PROVIDED BY THE CONTRACTOR. TYPICAL LEAD TIME FOR BOLTS AND BOLTING PLATES IS 2-4 WEEKS. THE CONTRACTOR SHALL PROVIDE ALL EQUIPMENT NECESSARY TO LIFT, PROTECT, SECURE, AND TRANSPORT THE BUILDING WITH THE EXCEPTION OF THE BOLTS AND BOLTING PLATES.

   CONTACT FOR THE BUILDING MANUFACTURER IS MATT ARMITAGE. MATT CAN BE REACHED AT (509) 892-3250. THE CITY WILL PREPARE A COMPACTED, CRUSHED SURFACING PAD FOR THE BUILDING. THE CONTRACTOR SHALL PLACE THE BUILDING ONTO THIS PAD WHICH IS LOCATED WITHIN THE SOURCE 20 SECURITY FENCING. THE CITY WILL BE RESPONSIBLE FOR ANCHORING/SECURING THE BUILDING TO THE PAD. ONCE THE BUILDING IS RELOCATED, REMOVE AND WASTEHAUL CONCRETE PAD AT THE PROJECT LOCATION AND PROVIDE SURFACING PER PROPOSED SITE PLAN. ADDITIONAL DEMOLITION OF CONDUITS AND PIPING IS REQUIRED AND SHALL BE SHOWN ON THE PLANS.
9. THE CONTRACTOR SHALL PROVIDE THE CITY WITH 14 CALENDAR DAYS NOTICE PRIOR TO INITIATING ANY DEMOLITION WORK. THE CONTRACTOR SHALL COORDINATE WITH THE CITY PRIOR TO DEMOLITION IN ORDER TO IDENTIFY ITEMS THAT SHALL BE SALVAGED TO THE CITY.
10. POLE AND ITS ASSOCIATED EQUIPMENT SHALL BE PROVIDED WITH POWER FOR THE DURATION OF CONSTRUCTION. CONTRACTOR SHALL PROVIDE TEMPORARY POWER TO ENSURE CONTINUOUS OPERATION UNTIL FINAL ELECTRICAL CONNECTIONS ARE MADE. DOWNTIME FOR EITHER POLE IS LIMITED TO 4 CONSECUTIVE HOURS WITHIN ANY 24 HOUR PERIOD.
11. CONTRACTOR TO TAKE MEASURES TO PROTECT TREES SHOWN TO REMAIN. ONLY TREES WITH DEMOLITION HATCH SHALL BE REMOVED.
12. S15R SHALL BE DECOMMISSIONED BY A LICENSED WELL DRILLER IN ACCORDANCE WITH WAC 173-160-381. WELL LOGS ARE AVAILABLE IN THE PROJECT APPENDICES OR ARE AVAILABLE UPON REQUEST. THE CONTRACTOR SHALL OBTAIN ALL NECESSARY PERMITS AS REQUIRED TO COMPLETE THE WORK.

0 1" 2"
TWO INCHES AT FULL SCALE. IF NOT, SCALE ACCORDINGLY

Gray & Osborne, Inc.
CONSULTING ENGINEERS
1130 RAINIER AVENUE SOUTH, SUITE 300
SEATTLE, WASHINGTON 98144

DATE: NOV 2022
DRAWN: PGM
CHECKED: KPS
APPROVED: RLP

No.	REVISION	DATE	APPD

CITY OF LACEY
THURSTON COUNTY WASHINGTON
BEACHCREST WELLFIELD pH IMPROVEMENTS
SITE DEMOLITION AND TESC PLAN

SHEET: G-6
SHEET: 6 of 81
JOB NO.: 19520
DWG:G_DEMO_TESC_P

L:\LACEY\19520 pH Predesign and S17 Facilities Design\PLANSET\G-Sheets\G_DEMO_TESC_P.dwg, 11/21/2022 10:03 AM, PHILIP MARSHALL

NOTES:

1. PHOTO IS TAKEN BEHIND S15, LOOKING NORTH.
2. REMOVE AND WASTEHAUL ALL EXISTING BUILDING COMPONENTS INCLUDING, BUT NOT LIMITED TO FRAMING, INSULATION, WOOD SIDING, METAL ROOFING, AND CONCRETE SLAB.
3. EXISTING BUILDING DIMENSIONS ARE LISTED ON EXISTING SITE PLAN.
4. SEE SITE DEMOLITION SHEETS FOR ADDITIONAL DEMOLITION AND MODIFICATION WORK.
5. S15 IS TO BE DECOMMISSIONED.
6. REMOVE AND WASTEHAUL BURIED CONDUITS AND CONDUCTORS. SEE SITE DEMOLITION PLAN FOR ADDITIONAL INFORMATION.

PHOTO DETAIL: S15 DEMOLITION

1 / G–6 NOT TO SCALE

NOTES:

1. PHOTO IS TAKEN NEAR S16, LOOKING SOUTHEAST.
2. REMOVE AND WASTEHAUL ALL EXISTING BUILDING COMPONENTS INCLUDING BUT NOT LIMITED TO FRAMING, INSULATION, WOOD SIDING, METAL ROOFING, AND CONCRETE SLAB.
3. EXISTING BUILDING DIMENSIONS ARE LISTED ON EXISTING SITE PLAN.
4. SEE SITE DEMOLITION SHEETS FOR ADDITIONAL DEMOLITION AND MODIFICATION WORK.
5. REMOVE AND WASTEHAUL BURIED CONDUITS AND CONDUCTORS. SEE SITE DEMOLITION PLAN FOR ADDITIONAL INFORMATION.

PHOTO DETAIL: S16 DEMOLITION

3 / G–6 NOT TO SCALE

NOTES:

1. VAULT INTERIOR DIMENSIONS ARE 6' x 8' x 8' (LxWxH). WALLS ARE 6–INCH THICK REINFORCED CONCRETE AND INCLUDE CONCRETE BOTTOM SLAB. LID IS CONCRETE WITH METAL ACCESS HATCH. ACCESS HATCH IS DOUBLE LEAF TYPE WITH DIMENSIONS OF 5' x 7' (LxW).
2. VENTURI PIPING INCLUDES BOTH STEEL AND SCH40 PVC. DIAMETER OF ALL IS LESS THAN 3–INCHES.
3. BLOWOFF PIPING IS 3–INCH DIAMETER STEEL. SALVAGE VALVES WITHIN THE VAULT ON THIS PIPING (SHOWN) TO CITY.
4. SEE SITE DEMOLITION PLAN FOR ADDITIONAL DEMOLITION REQUIREMENTS.
5. EXISTING LADDER IS HDG MATERIALS AND INCLUDES LADDER UP SAFETY DEVICE. REMOVE AND WASTEHAUL ALL LADDER COMPONENTS.

PHOTO DETAIL: CHLORINE VAULT DEMOLITION

5 / G–6 NOT TO SCALE

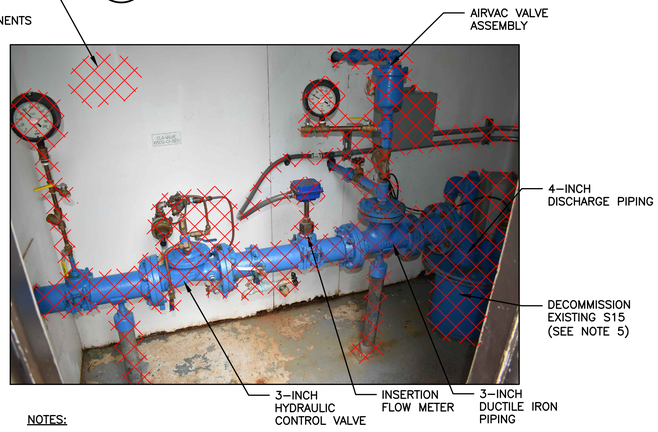

NOTES:

1. PHOTO IS TAKEN WITHIN S15 BUILDING.
2. EXISTING BUILDING IS 2x4 WOOD CONSTRUCTION WITH INTERIOR PLYWOOD ATOP A CONCRETE SLAB. ROOFING IS COMPOSITE SHINGLE AND DOOR IS METAL WITH A METAL FRAME. FOUNDATION IS TYPICAL 8–INCH SLAB ON GRADE WITH STEM WALL AND FOOTING DOWN TO 2–FEET BELOW GRADE.
3. REMOVE AND WASTEHAUL ALL EXISTING PIPING, FITTINGS, EQUIPMENT, AND COMPONENTS. SELECT COMPONENTS SHALL BE SALVAGED TO CITY. CONTRACTOR SHALL COORDINATE WITH THE CITY FOR ITEMS TO BE SALVAGED PRIOR TO BEGINNING DEMOLITION. DOGHOUSE CONTAINS ADDITIONAL 3–INCH PIPING AND FITTINGS FOR REMOVAL AND WASTEHAULING. NOT ALL EQUIPMENT TO BE REMOVED AND WASTEHAULED IS SHOWN.
4. REMOVE AND WASTEHAUL ALL ELECTRICAL COMPONENTS INCLUDING CONDUIT. SEE SITE DEMOLITION PLAN FOR ADDITIONAL DEMOLITION AND MODIFICATION WORK.
5. S15 IS TO BE DECOMMISSIONED. SEE PROJECT SPECIFICATIONS FOR ADDITIONAL INFORMATION.
6. WELL INFORMATION IS AVAILABLE UPON REQUEST FROM THE OWNER.

PHOTO DETAIL: S15 INTERIOR DEMOLITION

2 / – NOT TO SCALE

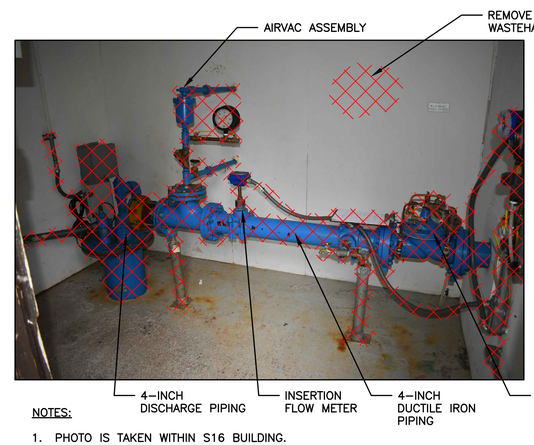

NOTES:

1. PHOTO IS TAKEN WITHIN S16 BUILDING.
2. EXISTING BUILDING IS 2x4 WOOD CONSTRUCTION WITH INTERIOR PLYWOOD ATOP A CONCRETE SLAB. ROOFING IS COMNPOSITE SHINGLE AND DOOR IS METAL WITH A METAL FRAME. FOUNDATION IS TYPICAL 8–INCH SLAB ON GRADE WITH STEM WALL AND FOOTING DOWN TO 2–FEET BELOW GRADE.
3. REMOVE AND WASTEHAUL ALL EXISTING PIPING, FITTINGS, EQUIPMENT, AND COMPONENTS. SELECT COMPONENTS SHALL BE SALVAGED TO CITY. CONTRACTOR SHALL COORDINATE WITH THE CITY FOR ITEMS TO BE SALVAGED PRIOR TO BEGINNING DEMOLITION. DOGHOUSE CONTAINS ADDITIONAL 3–INCH PIPING AND FITTINGS FOR REMOVAL AND WASTEHAULING. NOT ALL EQUIPMENT TO BE REMOVED AND WASTEHAULED IS SHOWN.
4. REMOVE AND WASTEHAUL ALL ELECTRICAL COMPONENTS INCLUDING CONDUIT. SEE SITE DEMOLITION PLAN FOR ADDITIONAL DEMOLITION AND MODIFICATION WORK.
5. WELL INFORMATION IS AVAILABLE UPON REQUEST FROM THE OWNER.

PHOTO DETAIL: S16 INTERIOR DEMOLITION

4 / – NOT TO SCALE

NOTES:

1. PHOTO IS TAKEN FROM THE NORTHWEST CORNER OF THE PARCEL, LOOKING EAST.
2. REMOVE AND WASTEHAUL CORNER POSTS. SEE PLAN FOR FULL EXTENT OF DEMOLITION. INSTALL NEW CORNER POSTS FOR NEW ROLLING GATE AND CONNECT TO EXISTING FENCING TO REMAIN. SEE MODIFICATION PLAN.

PHOTO DETAIL: FENCING AND TREE DEMOLITION

6 / G–6 NOT TO SCALE

0 1" 2"
TWO INCHES AT FULL SCALE. IF NOT, SCALE ACCORDINGLY

Gray & Osborne, Inc.
CONSULTING ENGINEERS
1130 RAINIER AVENUE SOUTH, SUITE 300
SEATTLE, WASHINGTON 98144

DATE: NOV 2022	DRAWN: PGM	CHECKED: KPS	APPROVED: RLP

No.	REVISION	DATE	APPD

CITY OF LACEY
THURSTON COUNTY WASHINGTON
BEACHCREST WELLFIELD pH IMPROVEMENTS
BUILDING DEMOLITION DETAILS

SHEET: G-7
SHEET: 7 of 81
JOB NO.: 19520
DWG:G_DET2

L:\LACEY\19520 pH Predesign and S17 Facilities Design\PLANSET\G-Sheets\G_DET2.dwg, 11/21/2022 10:03 AM, PHILIP MARSHALL

NOTES:

1. PHOTO IS TAKEN NEAR S15R, LOOKING SOUTHWEST.
2. REMOVE AND WASTEHAUL ALL EXISTING BUILDING COMPONENTS INCLUDING BUT NOT LIMITED TO FRAMING, INSULATION, SIDING, ROOFING, AND SLAB.
3. EXISTING BUILDING DIMENSIONS ARE LISTED ON EXISTING SITE PLAN.
4. SEE SITE DEMOLITION PLAN FOR ADDITIONAL INFORMATION ON DEMOLITION AND MODIFICATION WORK.
5. REMOVE AND WASTEHAUL BURIED CONDUITS AND CONDUCTORS. SEE SITE DEMOLITION PLAN FOR ADDITIONAL INFORMATION.

1 / G–6 STORAGE BUILDING DEMOLITION

NOT TO SCALE

NOTES:

1. PHOTO IS TAKEN NEAR FROM BACKSIDE OF BUILDING, LOOKING NORTHEAST.
2. REMOVE AND WASTEHAUL ALL EXISTING BUILDING COMPONENTS INCLUDING BUT NOT LIMITED TO FRAMING, INSULATION, SIDING, ROOFING, AND SLAB.
3. EXISTING BUILDING DIMENSIONS ARE LISTED ON EXISTING SITE PLAN.
4. COORDINATE METER DISPOSAL/SALVAGE WITH UTILITY PROVIDER AND CITY AS REQUIRED.
5. SEE SITE DEMOLITION PLAN FOR ADDITIONAL INFORMATION ON DEMOLITION AND MODIFICATION WORK.
6. REMOVE AND WASTEHAUL BURIED CONDUITS AND CONDUCTORS. SEE SITE DEMOLITION PLAN FOR ADDITIONAL INFORMATION.

3 / G–6 ELECTRICAL BUILDING DEMOLITION

NOT TO SCALE

NOTES:

1. PHOTO IS TAKEN NEAR S15R, LOOKING SOUTHEAST.
2. BUILDING TO BE RELOCATED TO OWNER PROVIDED PAD AT 8550 19TH AVE SE, LACEY, WA, 98516 (S20 FACILITY). SEE DEMOLITION SITE PLAN FOR ADDITIONAL INFORMATION.
3. EXISTING BUILDING DIMENSIONS ARE LISTED ON EXISTING SITE PLAN.
4. SELECT COMPONENTS SHALL BE DISCONNECTED PRIOR TO TRANSPORTATION.
5. REMOVE AND WASTEHAUL BUILDING SUPPORT PAD/SLAB.

5 / G–6 CHLORINE BUILDING DEMOLITION

NOT TO SCALE

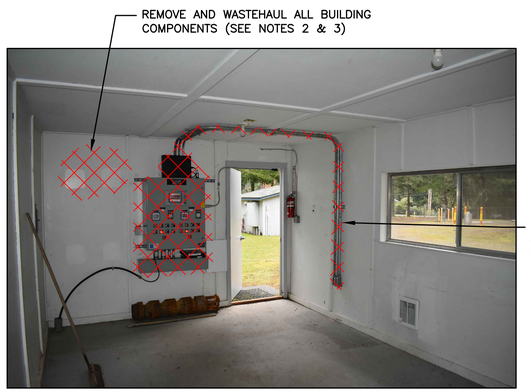

NOTES:

1. PHOTO IS TAKEN WITHIN THE STORAGE BUILDING.
2. EXISTING BUILDING IS 2X4 WOOD CONSTRUCTION WITH PLYWOOD INTERIOR ATOP A 6–INCH CONCRETE SLAB. ROOFING IS COMPOSITE SHINGLES AND DOOR IS METAL WITH METAL FRAME. FOUNDATION IS TYPICAL 8–INCH SLAB ON GRADE WITH STEM WALL AND FOOTING DOWN TO 2–FEET BELOW GRADE.
3. REMOVE AND WASTEHAUL ALL EXISTING PIPING AND COMPONENTS. NOT ALL EQUIPMENT TO BE REMOVED AND WASTEHAULED IS SHOWN AND ADDITIONAL EQUIPMENT INCLUDES 1–2 BASE CABINETS, WOOD COUNTERTOP, AND SMALL 20–GALLON ELECTRIC WATER HEATER.
4. REMOVE AND WASTEHAUL ALL ELECTRICAL COMPONENTS, INCLUDING CONDUIT. SEE SITE DEMOLITION PLAN FOR ADDITIONAL INFORMATION.
5. COORDINATE WITH CITY PRIOR TO DEMOLITION FOR ITEMS TO BE SALVAGED.

2 / – STORAGE BUILDING INTERIOR DEMOLITION

NOT TO SCALE

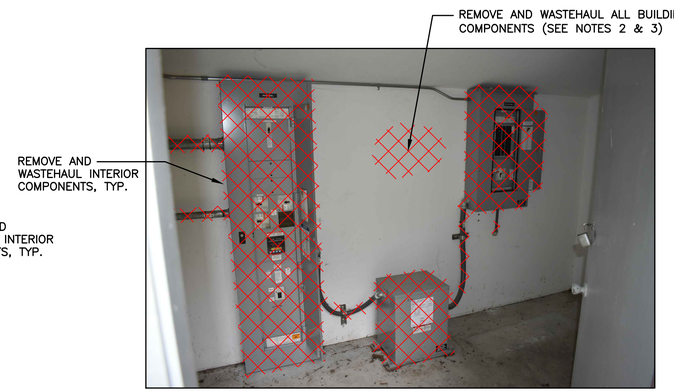

NOTES:

1. PHOTO IS TAKEN WITHIN THE ELECTRICAL BUILDING.
2. EXISTING BUILDING IS 2X4 WOOD CONSTRUCTION WITH GYPSUM BOARD INTERIOR ATOP A 6–INCH CONCRETE SLAB. ROOFING IS COMPOSITE SHINGLES AND DOOR IS WOOD WITH METAL FRAME. FOUNDATION IS TYPICAL 8–INCH SLAB ON GRADE WITH STEM WALL AND FOOTING DOWN TO 2–FEET BELOW GRADE.
3. REMOVE AND WASTEHAUL ALL EXISTING PIPING AND COMPONENTS. NOT ALL EQUIPMENT TO BE REMOVED AND WASTEHAULED IS SHOWN.
4. REMOVE AND WASTEHAUL ALL ELECTRICAL COMPONENTS, INCLUDING CONDUIT. SEE SITE DEMOLITION PLAN FOR ADDITIONAL INFORMATION.
5. COORDINATE WITH CITY PRIOR TO DEMOLITION FOR ITEMS TO BE SALVAGED.

4 / – ELECTRICAL BUILDING INTERIOR DEMOLITION

NOT TO SCALE

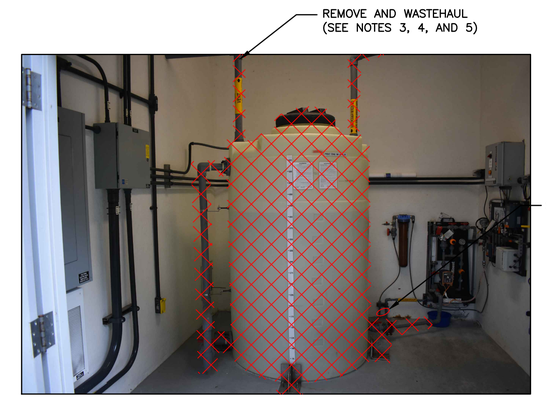

NOTES:

1. PHOTO IS TAKEN WITHIN THE CHLORINE BUILDING.
2. EXISTING BUILDING IS PRE–CAST CONCRETE WITH INTEGRAL FLOOR SLAB AND METAL ROOFING FRAME. SEE SHEET G–6 FOR ADDITIONAL INFORMATION. CONTRACTOR SHALL COMPLETE ALL REQUIRED PREPARATIONS TO BUILDING PRIOR TO RELOCATION.
3. REMOVE AND WASTEHAUL EXISTING 500–GALLON HDPE STORAGE TANK, FILL PIPING, VENT PIPE, SIGHT GAUGE PIPING, AND SELECTED DISCHARGE PIPING. THE CITY WILL DRAIN STORAGE TANK PRIOR TO REMOVAL AND WASTEHAULING.
4. COORDINATE WITH CITY PRIOR TO DEMOLITION FOR ITEMS TO BE SALVAGED. THE CITY WILL REMOVE ALL LOOSE ITEMS, HOSES, ETC. PRIOR TO BUILDING RELOCATION.
5. CONTRACTOR TO CUT/MODIFY ALL EXISTING CONNECTING PIPING AS REQUIRED PRIOR TO BUILDING RELOCATION. CONNECTING PIPING IS ALL LESS THAN 1–INCH DIAMETER PVC MATERIALS. FEWER THAN 3 EXISTING PIPE MODIFICATIONS WILL BE REQUIRED.

6 / – CHLORINE BUILDING INTERIOR MODIFICATIONS

NOT TO SCALE

0 1" 2"
TWO INCHES AT FULL SCALE. IF NOT, SCALE ACCORDINGLY

Gray & Osborne, Inc.
CONSULTING ENGINEERS
1130 RAINIER AVENUE SOUTH, SUITE 300
SEATTLE, WASHINGTON 98144

DATE: NOV 2022	DRAWN: PGM	CHECKED: KPS	APPROVED: RLP

No.	REVISION	DATE	APPD

PHILLIP STEWART, STATE OF WASHINGTON, REGISTERED PROFESSIONAL ENGINEER, 55750, 11/21/22

RESSEL L. PORTER, STATE OF WASHINGTON, REGISTERED PROFESSIONAL ENGINEER, 35288

CITY OF LACEY
THURSTON COUNTY WASHINGTON
BEACHCREST WELLFIELD pH IMPROVEMENTS
BUILDING DEMOLITION DETAILS

SHEET: G-8
SHEET: 8 of 81
JOB NO.: 19520
DWG:G_DET2

L:\LACEY\19520 pH Predesign and S17 Facilities Design\PLANSET\G-Sheets\G_DET2.dwg, 11/21/2022 10:03 AM, PHILIP MARSHALL

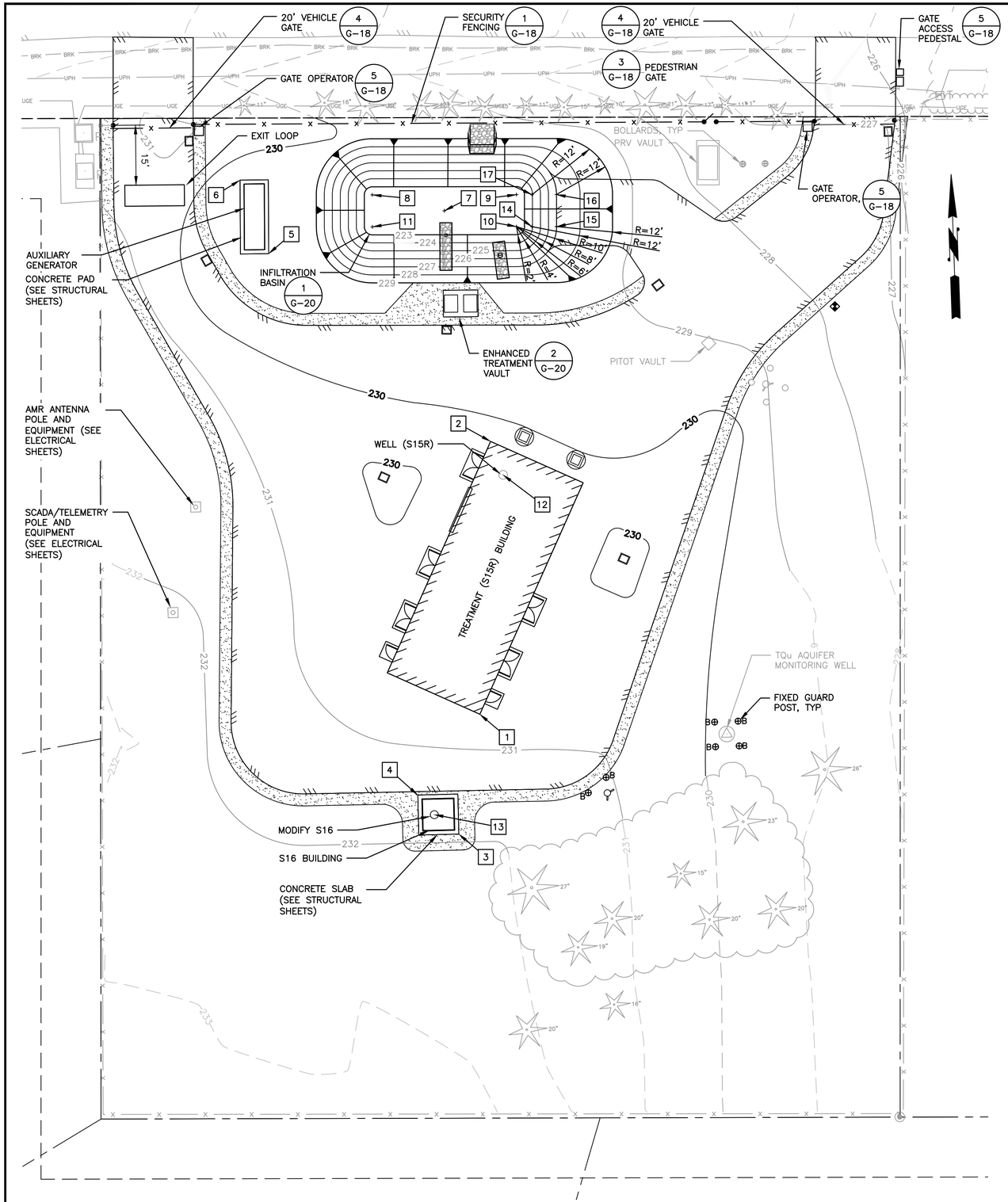

PROPOSED SITE PLAN

SCALE: 1"=15'

STRUCTURE COORDINATE TABLE

1	NORTHING	EASTING	ELEVATION ±	DESCRIPTION
1	652470.89	79916.15	230.50	TREATMENT BUILDING CORNER
2	652538.91	79921.22	230.50	TREATMENT BUILDING CORNER
3	652441.15	79909.86	232.00	WELL 16 PAD CORNER
4	652451.25	79899.97	232.00	WELL 16 PAD CORNER
5	652587.74	79867.46	230.00	GENERATOR PAD CORNER
6	652606.33	79860.90	230.00	GENERATOR PAD CORNER
7	652596.91	79911.70	222.50	POND CENTER
8	652601.51	79893.84	222.50	NW CORNER, POND EMBANKMENT RADIUS CENTER
9	652600.25	79929.82	222.50	NE CORNER, POND EMBANKMENT RADIUS CENTER
10	652592.32	79929.56	222.50	SE CORNER, POND EMBANKMENT RADIUS CENTER
11	652593.51	79893.58	222.50	SW CORNER, POND EMBANKMENT RADIUS CENTER
12	652529.50	79893.60	N/A	WELL S15R CENTER
13	652446.21	79903.92	N/A	WELL S16 CENTER
14	652592.20	79933.40	N/A	POND RADIUS POINT
15	652592.00	79939.60	N/A	POND RADIUS POINT
16	652600.00	79939.80	N/A	POND RADIUS POINT
17	652600.20	79933.70	N/A	POND RADIUS POINT

* NORTHING AND EASTING VALUES FOR THE SURVEY CONTROL POINTS WERE NUMERICALLY EXTRAPOLATED FROM THEIR LOCATIONS IN THE SURVEY AND NOT PROVIDED DIRECTLY BY THE CITY. ALL NORTHING AND EASTING VALUES FOR SITE LOCATIONS IN THIS PLANSET ARE BASED ON THESE CALCULATED VALUES WHICH NEED TO BE VERIFIED BY THE CONTRACTOR BEFORE ANY SITE DEMOLITION OR STAKING IS PERFORMED.

NOTES:

1. PROPOSED BUILDING AND SURFACING INVENTORY:

GRASS SURFACING		SF=29080
TREATMENT BUILDING	HT (FT)=16	SF=1,601
S16 BUILDING	HT (FT)=8	SF=64
ASPHALT IMPERVIOUS SURFACING		SF=15,849
GRAVEL IMPERVIOUS SURFACING		SF=2,099
TOTAL BUILDING IMPERVIOUS SURFACING		SF=2,875
TOTAL IMPERVIOUS SURFACING		SF=20,823
PARCEL AREA		SF=49,903
PERCENT IMPERVIOUS		SF=41.7%

0 1" 2"

TWO INCHES AT FULL SCALE. IF NOT, SCALE ACCORDINGLY

Gray & Osborne, Inc.
CONSULTING ENGINEERS
1130 RAINIER AVENUE SOUTH, SUITE 300
SEATTLE, WASHINGTON 98144

DATE: NOV 2022
DRAWN: PGM
CHECKED: KPS
APPROVED: RLP

No.	REVISION	DATE	APPD

NEIL PHILLIP STEWART, STATE OF WASHINGTON, REGISTERED PROFESSIONAL ENGINEER, 55769, 11/21/22

KENNETH PORTER, STATE OF WASHINGTON, REGISTERED PROFESSIONAL ENGINEER, 22878, 11/21/22

CITY OF LACEY
THURSTON COUNTY WASHINGTON
BEACHCREST WELLFIELD pH IMPROVEMENTS
PROPOSED SITE PLAN

SHEET: G-9
SHEET: 9 of 81
JOB NO.: 19520
DWG:G_PRO_SITE_P

L:\LACEY\19520 pH Predesign and S17 Facilities Design\PLANSET\G-Sheets\G_PRO_SITE_P.dwg, 11/21/2022 10:03 AM, PHILIP MARSHALL

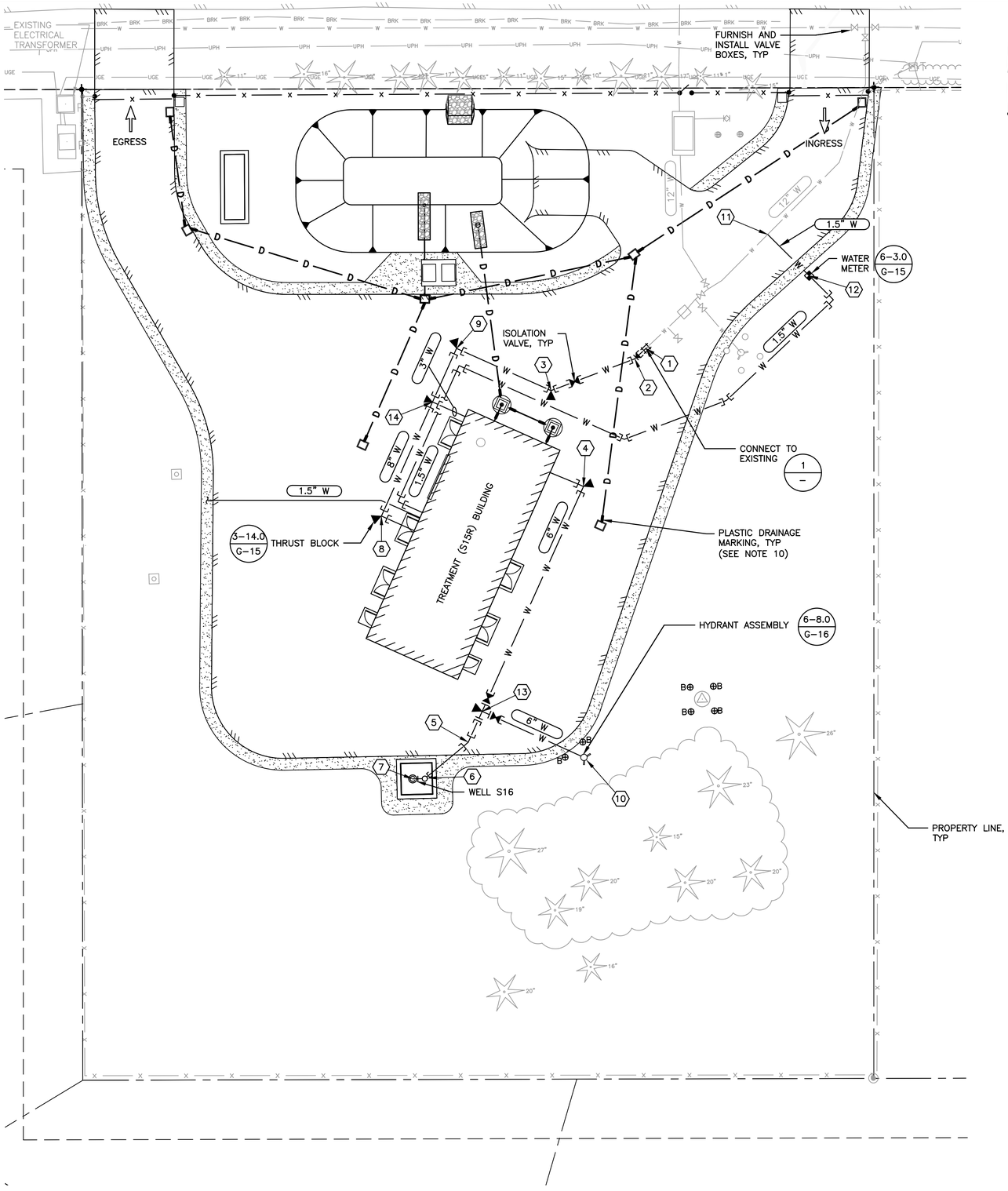

PROPOSED PIPING PLAN

SCALE: 1"=15'

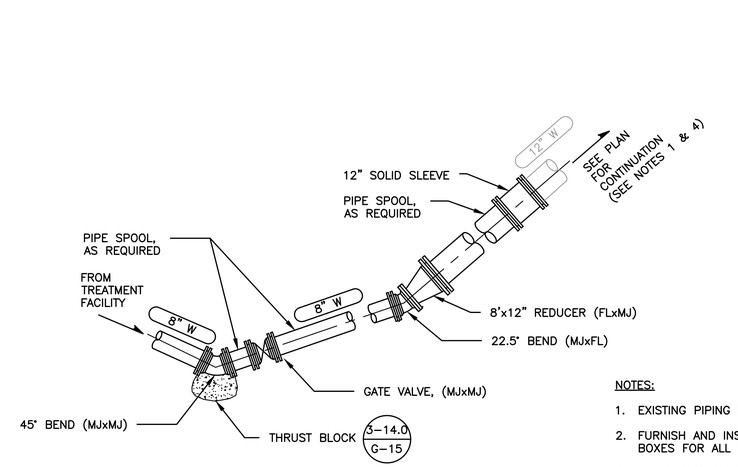

NOTES:

1. EXISTING PIPING IS 12" DUCTILE IRON.
2. FURNISH AND INSTALL NEW VALVE BOXES FOR ALL BURIED VALVES.
3. ALL BURIED PIPE CONNECTIONS SHALL BE RESTRAINED. SEE SPECIFICATION SECTION 15050 FOR ADDITIONAL INFORMATION.
4. CONTRACTOR SHALL POTHOLE TO VERIFY EXISTING PIPING LOCATION AND DEPTH.

1 – EXISTING CONNECTION DETAIL

SCALE: 3/8"=1'-0"

WATER PIPING COORDINATE TABLE

	NORTHING	EASTING	INVERT ELEV.	DESCRIPTION
X	652552.72	79966.55	EXISTING	CONNECTION TO EXISTING
2	652550.20	79963.63	225.0	22.5 DEGREE ELBOW (MJxMJ)
3	652542.91	79942.24	225.0	45 DEGREE ELBOW (MJxMJ)
4	652518.44	79949.57	227.0	90 DEGREE ELBOW (MJxMJ)
5	652454.98	79918.26	227.0	22.5 DEGREE ELBOW (MJxMJ)
6	652446.28	79907.79	227.0	90 DEGREE ELBOW (UP) (MJxMJ)
7	652446.21	79903.90	N/A	S16
8	652512.77	79898.35	225.0	90 DEGREE ELBOW (MJxMJ)
9	652554.38	79918.76	225.0	90 DEGREE ELBOW (MJxMJ)
10	652450.12	79947.30	225.0	90 DEGREE ELBOW (UP) (MJxMJ)
11	652580.38	79998.30	225.0	SERVICE CONNECTION
12	652569.62	80008.36	N/A	WATER METER
13	652462.62	79922.03	227.0	TEE (FLxFLxFL)
14	652541.09	79912.24	225.0	TEE (MJxMJ)

* NORTHING AND EASTING VALUES FOR THE SURVEY CONTROL POINTS WERE NUMERICALLY EXTRAPOLATED FROM THEIR LOCATIONS IN THE SURVEY AND NOT PROVIDED DIRECTLY BY THE CITY. ALL NORTHING AND EASTING VALUES FOR SITE LOCATIONS IN THIS PLANSET ARE BASED ON THESE CALCULATED VALUES WHICH NEED TO BE VERIFIED BY THE CONTRACTOR BEFORE ANY SITE DEMOLITION OR STAKING IS PERFORMED.

NOTES:

1. SEE DETAIL SHEETS FOR TYPICAL TRENCH DETAIL AND PIPE SECTION.
2. PIPING BETWEEN POINTS OF INDICATED ELEVATION SHALL BE SET AT A SINGLE, UNIFORM GRADE.
3. ELECTRICAL POWER DISTRIBUTION PIPING IS NOT SHOWN. SEE ELECTRICAL SHEETS FOR MORE INFORMATION.
4. THE CONTRACTOR SHALL FIELD VERIFY LOCATIONS, SIZES, AND TYPES OF ALL CONNECTIONS TO EXISTING SYSTEMS PRIOR TO MAKING THE FINAL CONNECTIONS.
5. PRIOR TO SYSTEM CONNECTION, THE CONTRACTOR SHALL DISINFECT WATER PIPING AND OBTAIN SATISFACTORY PRESSURE AND BACTERIOLOGICAL TEST RESULTS. SEE SPECIFICATIONS FOR ADDITIONAL INFORMATION.
6. SEE SPECIFICATIONS FOR ADDITIONAL INFORMATION ON DEMOLITION, SALVAGE, TIMING, AND CONSTRUCTION SEQUENCING.
7. WHEN CONNECTING NEW PIPING TO EXISTING PIPING, THE CONTRACTOR SHALL PROVIDE ALL COUPLINGS AND FITTINGS NECESSARY TO PROVIDE A CONNECTION THAT MEETS OR EXCEEDS THE PRESSURE RATING OF THE NEW PIPE.
8. ALL BURIED VALVES SHALL BE PROVIDED WITH VALVE BOX. SEE STANDARD DETAILS FOR ADDITIONAL INFORMATION.
9. CONTRACTOR SHALL COORDINATE WITH OWNER PRIOR TO SERVICE CONNECTION. CONTRACTOR SHALL FOLLOW ALL APPLICABLE OWNER REQUIREMENTS AND STANDARDS.
10. FURNISH AND INSTALL 4" X 12" PLASTIC DRAINAGE MARKING AT THE SIDES OF CATCH BASINS AND MANHOLES WHERE PIPE IS PRESENT. ALIGN MARKINGS WITH PIPE ALIGNMENT AND INSTALL MARKERS APPROXIMATELY 6-INCHES FROM STRUCTURE FRAME. PLASTIC MATERIALS MUST MEET THE REQUIREMENTS OF WSDOT STANDARD SPECIFICATION 9-34.3.

0 1" 2"

TWO INCHES AT FULL SCALE. IF NOT, SCALE ACCORDINGLY

Gray & Osborne, Inc.
CONSULTING ENGINEERS
1130 RAINIER AVENUE SOUTH, SUITE 300
SEATTLE, WASHINGTON 98144

DATE: NOV 2022 | DRAWN: PGM | CHECKED: KPS | APPROVED: RLP

No.	REVISION	DATE	APPD

CITY OF LACEY
THURSTON COUNTY WASHINGTON
BEACHCREST WELLFIELD pH IMPROVEMENTS
PROPOSED WATER PIPING PLAN

SHEET: G-10
SHEET: 10 of 81
JOB NO.: 19520
DWG:G_PRO_SITE_P

L:\LACEY\19520 pH Predesign and S17 Facilities Design\PLANSET\G-Sheets\G_PRO_SITE_P.dwg, 11/21/2022 10:03 AM, PHILIP MARSHALL

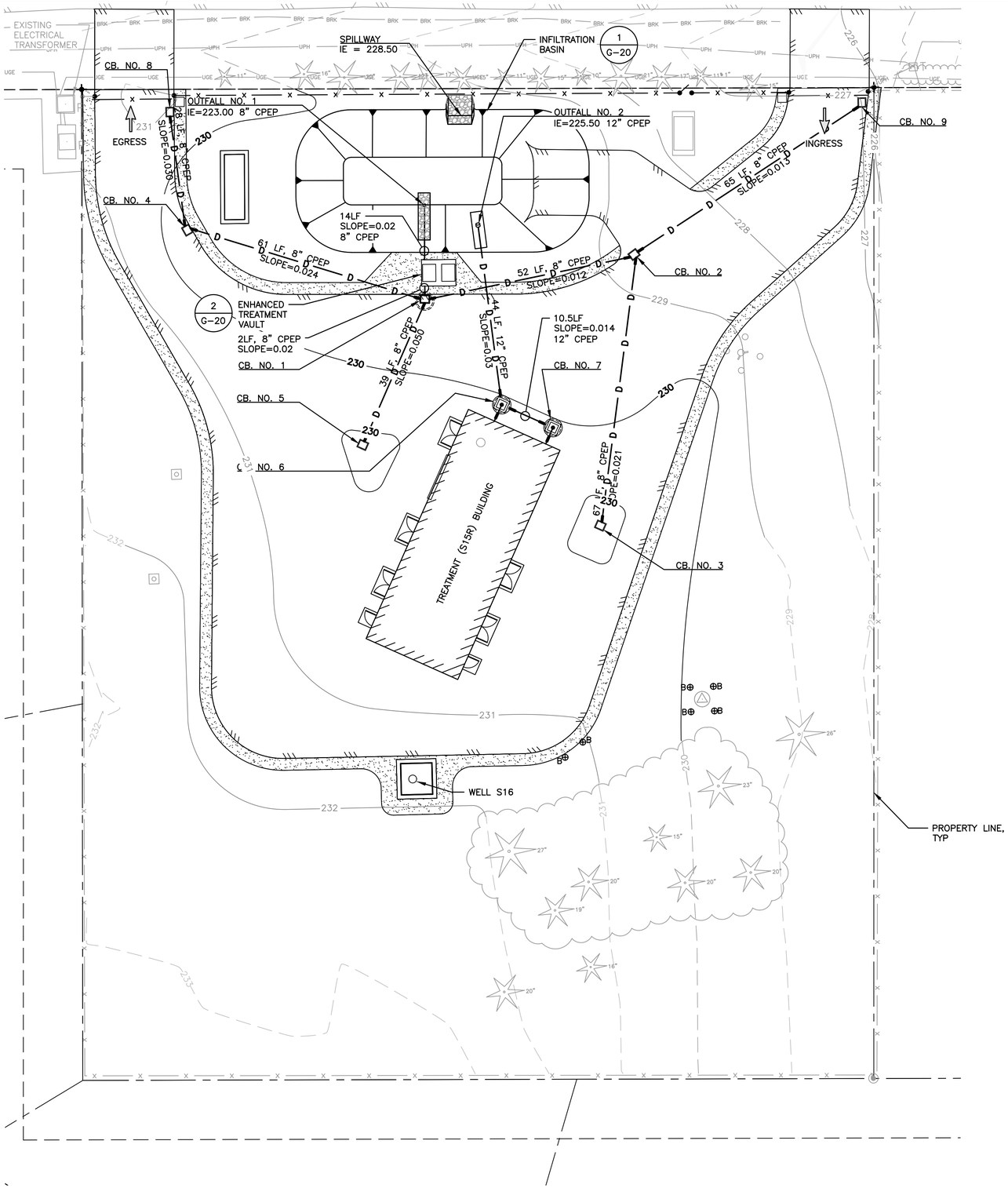

PROPOSED PIPING PLAN

SCALE: 1"=15'

CATCH BASIN COORDINATE TABLE

CB NO.	NORTHING	EASTING	RIM	INVERT ELEV	TYPE	NOTES
1	652567.11	79911.21	229.20	223.82	2 (48")	SEE NOTE 6
2	652576.50	79964.37	228.50	224.44	1	SEE NOTE 6
3	652508.44	79953.50	229.50	225.87	1	SEE NOTE 6
4	652586.59	79851.89	229.70	225.26	1	SEE NOTE 6
5	652530.89	79894.28	229.70	225.77	1	SEE NOTE 6
6	652539.79	79929.67	230.00	226.82	2 (48")	SEE NOTE 7
7	652533.56	79942.40	230.00	226.98	2 (48")	SEE NOTE 7
8	652616.50	79848.50	230.90	226.10	1	SEE NOTE 6
9	652612.83	80023.56	227.30	225.30	1	SEE NOTE 6

* NORTHING AND EASTING VALUES FOR THE SURVEY CONTROL POINTS WERE NUMERICALLY EXTRAPOLATED FROM THEIR LOCATIONS IN THE SURVEY AND NOT PROVIDED DIRECTLY BY THE CITY. ALL NORTHING AND EASTING VALUES FOR SITE LOCATIONS IN THIS PLANSET ARE BASED ON THESE CALCULATED VALUES WHICH NEED TO BE VERIFIED BY THE CONTRACTOR BEFORE ANY SITE DEMOLITION OR STAKING IS PERFORMED.

NOTES:

1. SEE DETAIL SHEETS FOR TYPICAL TRENCH DETAIL AND PIPE SECTION.
2. PIPING BETWEEN POINTS OF INDICATED ELEVATION SHALL BE SET AT A SINGLE, UNIFORM GRADE.
3. WHERE PIPES CROSS WITH LESS THAN ONE FOOT OF CLEARANCE, CDF SHALL BE USED BETWEEN THE PIPES.
4. SEE SPECIFICATIONS FOR ADDITIONAL INFORMATION ON DEMOLITION, SALVAGE, TIMING, AND CONSTRUCTION SEQUENCING.
5. ELECTRICAL POWER DISTRIBUTION PIPING IS NOT SHOWN. SEE ELECTRICAL SHEETS FOR MORE INFORMATION.
6. PROVIDE FRAME AND GRATE AS SHOWN IN DETAIL 4 ON SHEET G-14.
7. PROVIDE WELDED BAR GRATING, MCNICHOLS GHB-300 OR EQUAL. PROVIDE 19-W-4 SPACING WITH BAR HEIGHT TO MATCH FRAME DEPTH. MATERIAL SHALL BE CARBON STEEL, HOT ROLLED, WITH GALVANIZED FINISH AND MINIMUM 70 PERCENT OPEN AREA. PROVIDE FULL WIDTH BANDING ON ALL FOUR EDGES.
8. SEE TESC NOTES SHEET FOR ADDITIONAL REQUIREMENTS.

0 1" 2"
TWO INCHES AT FULL SCALE. IF NOT, SCALE ACCORDINGLY

Gray & Osborne, Inc.
CONSULTING ENGINEERS
1130 RAINIER AVENUE SOUTH, SUITE 300
SEATTLE, WASHINGTON 98144

DATE: NOV 2022
DRAWN: PGM
CHECKED: KPS
APPROVED: RLP

No.	REVISION	DATE	APPD

CITY OF LACEY
THURSTON COUNTY WASHINGTON
BEACHCREST WELLFIELD pH IMPROVEMENTS
PROPOSED STORM PIPING PLAN

SHEET: G-11
SHEET: 11 of 81
JOB NO.: 19520
DWG:G_PRO_SITE_P

L:\LACEY\19520 pH Predesign and S17 Facilities Design\PLANSET\G-Sheets\G_PRO_SITE_P.dwg, 11/21/2022 10:03 AM, PHILIP MARSHALL

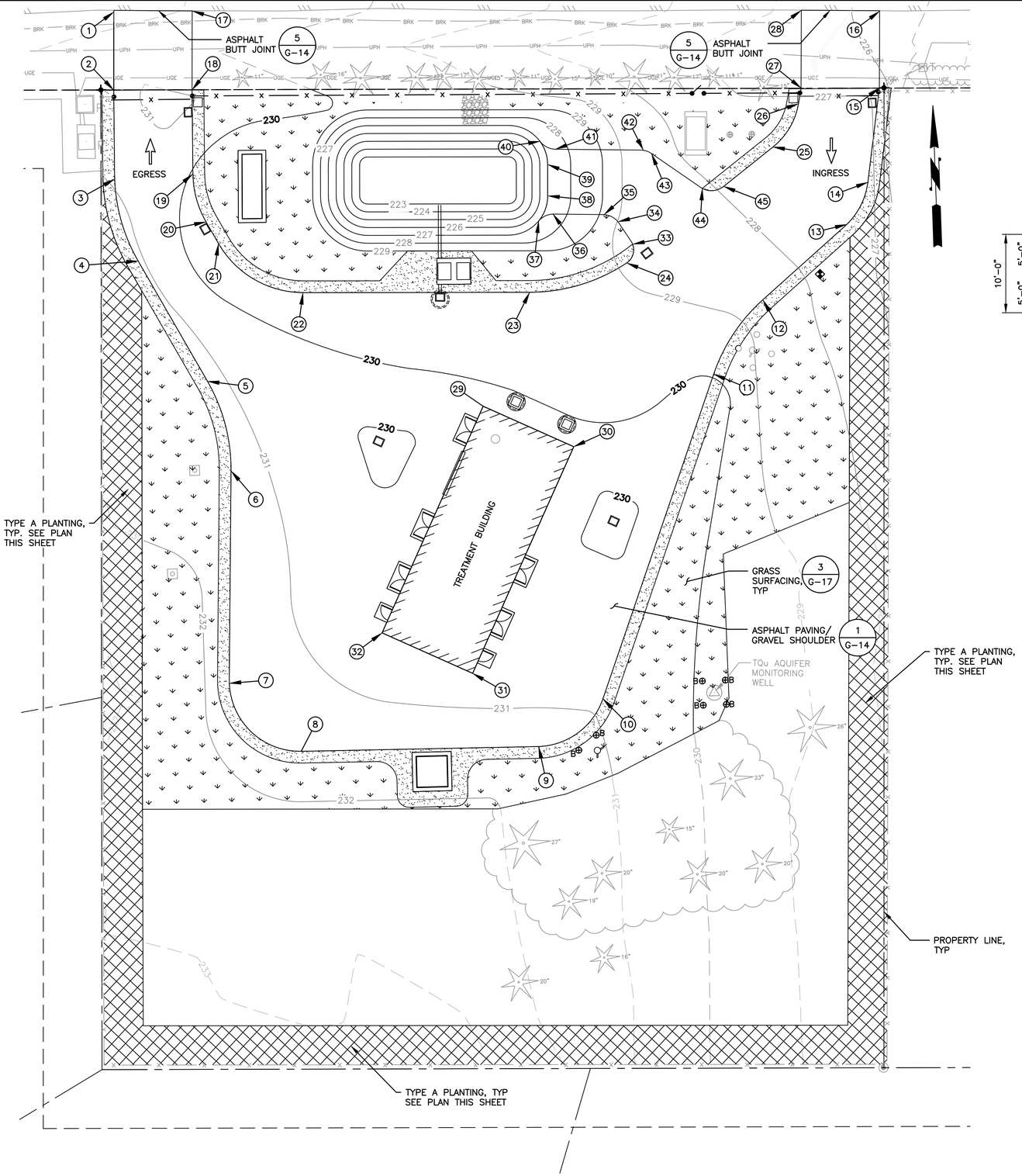

PROPOSED LANDSCAPING PLAN

SCALE: 1"=15'

PLANTING SCHEDULE						
DETAIL	TYPE	COMMON NAME	BOTANICAL NAME	MATURE HEIGHT	MATURE WIDTH	QUANTITY
1	EVERGREEN TREE	ALASKAN WEEPING CEDAR	CHAMAECYPARIS NOOTKATENSIS	25'–0" – 30'–0"	15'–0" – 18'–0"	40
2	SHRUB	RED OSIER DOGWOOD	CORNUS SERICEA	7'–0" – 9'–0"	8'–0" – 10'–0"	40
2	GROUNDCOVER	SWORD FERN	POLYSTICHUM MUNITUM	2'–0" – 4'–0"	3'–0" – 4'–0"	75

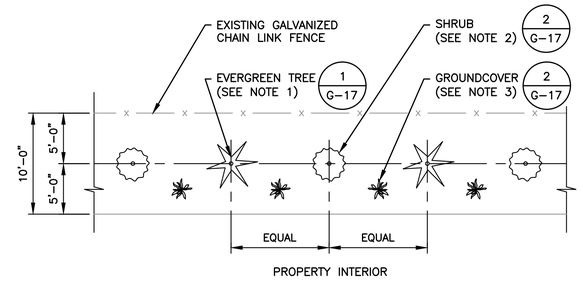

NOTES:

1. PLANT EVERGREEN TREE AT MAX 20'–0" ON CENTER. SPACE EVENLY.
2. PLANT SHRUB AT MAX 20'–0" ON CENTER, SPACE EVENLY.
3. PLANT GROUNDCOVER TO PROVIDE SURFACE COVERAGE WITHIN 3 YEARS. PROVIDE A MINIMUM OF 1'–0" SETBACK FROM EDGES OF BUFFER.

TYPE A PLANTING - PLAN

SITE COORDINATE TABLE					
	NORTHING	EASTING	ELEVATION ±	DESCRIPTION	RADIUS
1	652642.78	79830.47	–	PAVEMENT EDGE, MATCH EXISTING ASPHALT EDGE	
2	652622.83	79829.76	230.7	PAVEMENT EDGE	
3	652600.13	79829.21	230.9	PAVEMENT EDGE	
4	652579.02	79834.47	231.1	PAVEMENT EDGE	
5	652547.73	79851.08	231.2	PAVEMENT EDGE	
6	652524.68	79856.30	231.3	PAVEMENT EDGE	
7	652470.52	79853.97	231.7	PAVEMENT EDGE	
8	652452.53	79871.70	231.8	PAVEMENT EDGE	
9	652451.63	79932.34	231.8	PAVEMENT EDGE	
10	652463.22	79949.17	230.9	PAVEMENT EDGE	
11	652545.06	79980.33	230.0	PAVEMENT EDGE	
12	652563.58	79993.53	228.6	PAVEMENT EDGE	
13	652582.06	80015.64	227.0	PAVEMENT EDGE	
14	652592.63	80021.38	226.8	PAVEMENT EDGE	
15	652616.54	80025.12	225.8	PAVEMENT EDGE	
16	652636.16	80025.93	–	PAVEMENT EDGE, MATCH EXISTING ASPHALT EDGE	
17	652642.33	79850.49	–	PAVEMENT EDGE, MATCH EXISTING ASPHALT EDGE	
18	652622.18	79849.75	230.8	PAVEMENT EDGE	
19	652600.75	79849.22	230.0	PAVEMENT EDGE	
20	652588.40	79852.13	229.6	PAVEMNET EDGE	
21	652569.48	79876.25	229.7	PAVEMENT EDGE	
22	652567.56	79934.10	229.5	PAVEMENT EDGE	
23	652576.42	79962.43	229.5	PAVEMENT EDGE	
24	652574.20	79959.10	228.6	PAVEMENT EDGE	
25	652602.50	79997.50	226.9	PAVEMENT EDGE	
26	652617.16	80005.27	226.8	PAVEMENT EDGE	
27	652636.86	80005.97	226.7	PAVEMENT EDGE	
28	652637.12	80005.97	–	PAVEMENT EDGE, MATCH EXISTING ASPHALT EDGE	
29	652527.78	79921.22	230.5	PAVEMENT EDGE AT BUILDING CORNER	
30	652527.78	79943.98	230.5	PAVEMENT EDGE AT BUILDING CORNER	
31	652470.89	79916.15	230.5	PAVEMENT EDGE AT BUILDING CORNER	
32	652482.02	79893.40	230.5	PAVEMENT EDGE AT BUILDING CORNER	
33	652579.70	79960.40	228.8	PAVEMENT EDGE	
34	652584.40	79957.50	229.0	PAVEMENT EDGE	
35	652586.70	79953.50	229.0	PAVEMENT EDGE	
36	652587.30	79940.70	227.5	PAVEMENT EDGE	
37	652585.60	79937.00	227.0	PAVEMENT EDGE	
38	652592.00	79939.60	227.0	PAVEMENT EDGE	
39	652600.00	79939.80	227.0	PAVEMENT EDGE	
40	652606.00	79938.10	227.0	PAVEMENT EDGE	
41	652603.80	79942.00	227.5	PAVEMENT EDGE	
42	652602.80	79963.70	228.6	PAVEMENT EDGE	
43	652601.90	79966.40	228.5	PAVEMENT EDGE	
44	652592.50	79979.10	228.2	PAVEMENT EDGE	
45	652592.80	79984.50	228.0	PAVEMENT EDGE	

* NORTHING AND EASTING VALUES FOR THE SURVEY CONTROL POINTS WERE NUMERICALLY EXTRAPOLATED FROM THEIR LOCATIONS IN THE SURVEY AND NOT PROVIDED DIRECTLY BY THE CITY. ALL NORTHING AND EASTING VALUES FOR SITE LOCATIONS IN THIS PLANSET ARE BASED ON THESE CALCULATED VALUES WHICH NEED TO BE VERIFIED BY THE CONTRACTOR BEFORE ANY SITE DEMOLITION OR STAKING IS PERFORMED.

0 1" 2"
TWO INCHES AT FULL SCALE. IF NOT, SCALE ACCORDINGLY

Gray & Osborne, Inc.
CONSULTING ENGINEERS
1130 RAINIER AVENUE SOUTH, SUITE 300
SEATTLE, WASHINGTON 98144

DATE: NOV 2022
DRAWN: PGM
CHECKED: KPS
APPROVED: RLP

No.	REVISION	DATE	APPD

NEIL PHILLIP STEWART, STATE OF WASHINGTON, REGISTERED PROFESSIONAL ENGINEER, 52750, 11/21/22

RUSSELL A. PORTER, STATE OF WASHINGTON, REGISTERED PROFESSIONAL ENGINEER, 35488

CITY OF LACEY
THURSTON COUNTY WASHINGTON
BEACHCREST WELLFIELD pH IMPROVEMENTS
GRADING, LANDSCAPING, AND SURFACE RESTORATION PLAN

SHEET: G-12
SHEET: 12 of 81
JOB NO.: 19520
DWG:G_PRO_LSCP_P

L:\LACEY\19520 pH Predesign and S17 Facilities Design\PLANSET\G-Sheets\G_PRO_LSCP_P.dwg, 11/21/2022 10:04 AM, PHILIP MARSHALL

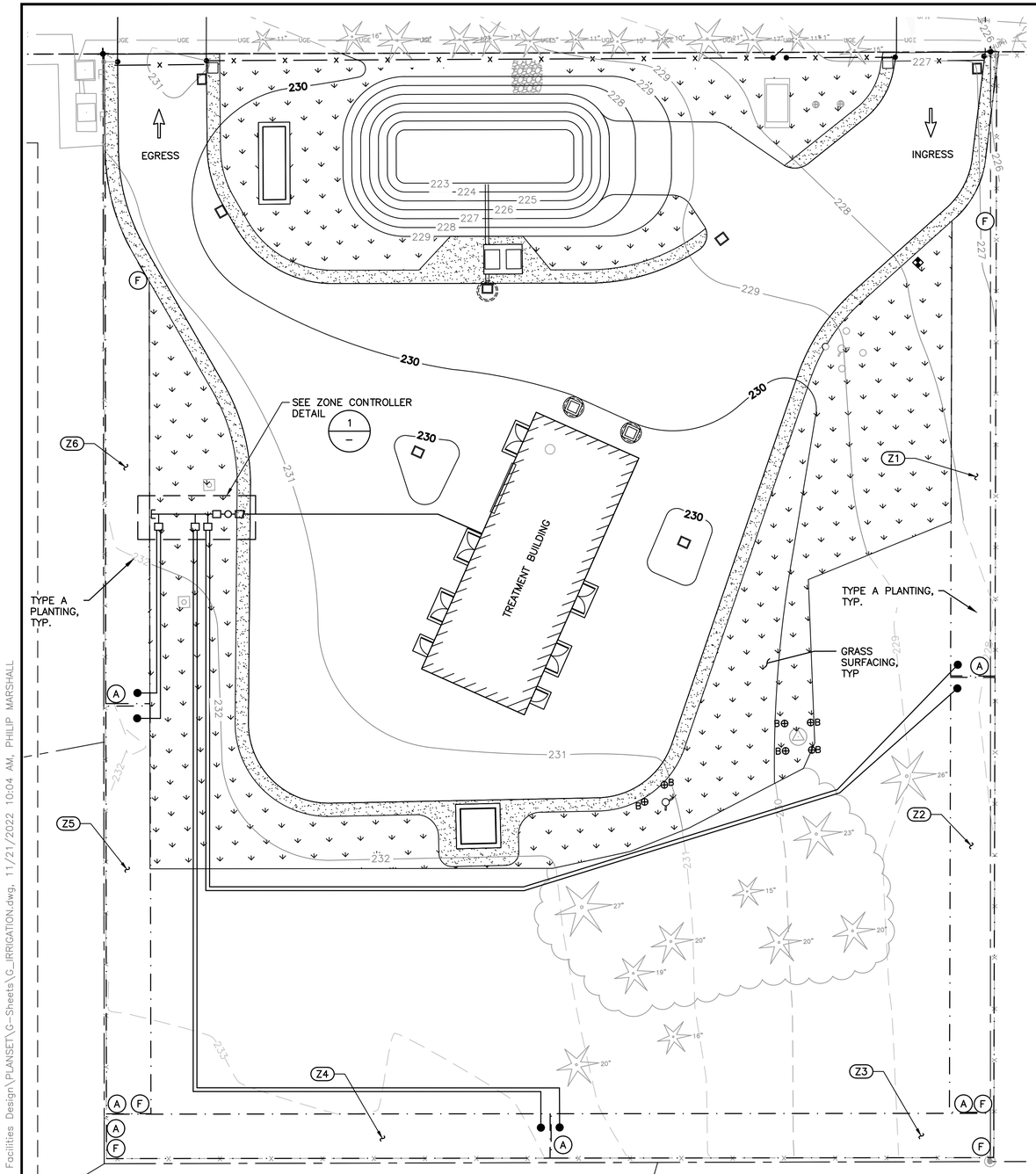

PROPOSED IRRIGATION PLAN

TYPE A PLANTING, TYP 5'

PROPERTY LINE, TYP

ZONE SUMMARY			
ZONE	AREA, FT^2	EMITTER SPACING, IN.	LATTERAL SPACING, IN.
Z1	1121	18	20
Z2	979	18	20
Z3	997	18	20
Z4	1000	18	20
Z5	919	18	20
Z6	1043	18	20

LEGEND:

(F) DRIP ZONE OPERATION INDICATOR POP-UP

(A) AIR RELIEF VALVE IN 10" ROUND VALVE BOX

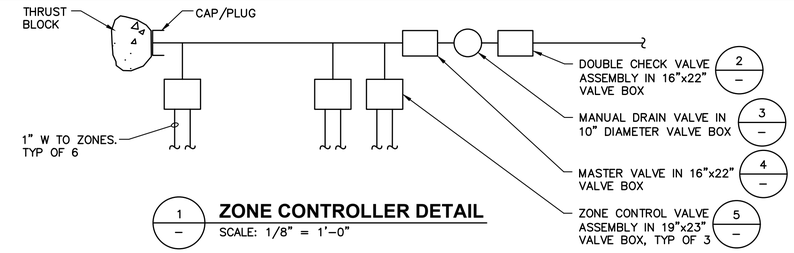

1/– **ZONE CONTROLLER DETAIL**
SCALE: 1/8" = 1'-0"

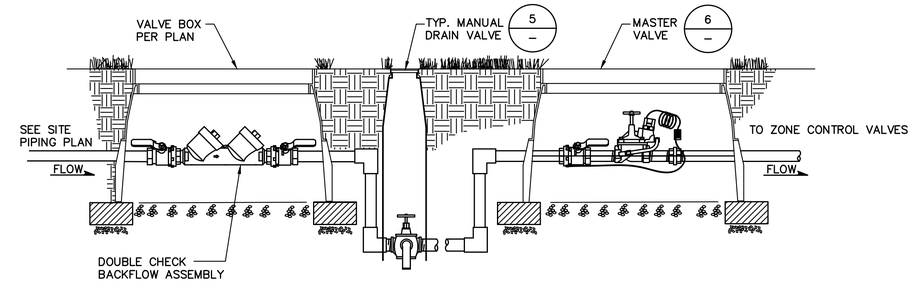

2/– **POINT OF CONNECTION**
NOT TO SCALE

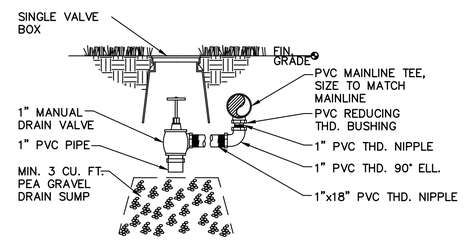

3/– **MANUAL DRAIN VALVE**
NOT TO SCALE

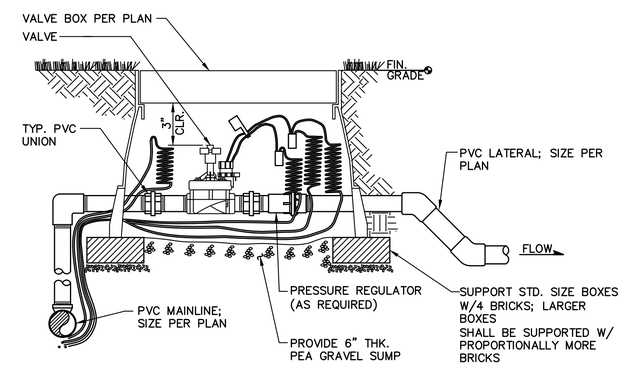

4/– **MASTER VALVE**
NOT TO SCALE

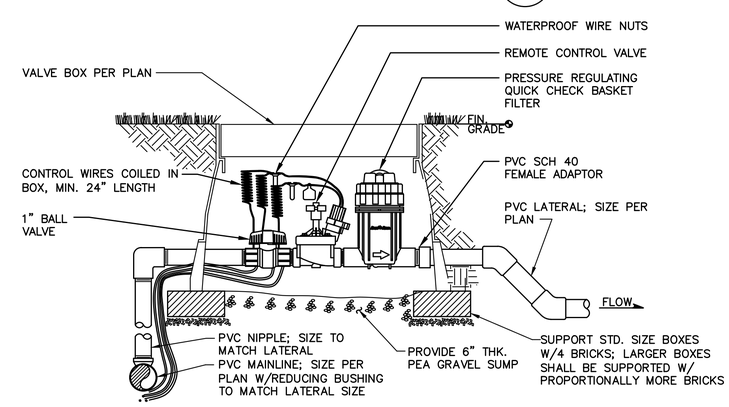

5/– **TYPICAL ZONE CONTROLLER VALVE**
NOT TO SCALE

0 1" 2"
TWO INCHES AT FULL SCALE. IF NOT, SCALE ACCORDINGLY

Gray & Osborne, Inc.
CONSULTING ENGINEERS
1130 RAINIER AVENUE SOUTH, SUITE 300
SEATTLE, WASHINGTON 98144

DATE: NOV 2022 | DRAWN: PGM | CHECKED: KPS | APPROVED: RLP

No.	REVISION	DATE	APPD

KEITH PHILLIP STEWART, STATE OF WASHINGTON, 52790, REGISTERED PROFESSIONAL ENGINEER, 11/21/22

RUSSELL L. PORTER, STATE OF WASHINGTON, 38586, REGISTERED PROFESSIONAL ENGINEER

CITY OF LACEY
THURSTON COUNTY WASHINGTON
BEACHCREST WELLFIELD pH IMPROVEMENTS
IRRIGATION PLAN AND DETAILS

SHEET: G-13
SHEET: 13 of 81
JOB NO.: 19520
DWG:G_IRRIGATION

L:\LACEY\19520 pH Predesign and S17 Facilities Design\PLANSET\G-Sheets\G_IRRIGATION.dwg, 11/21/2022 10:04 AM, PHILIP MARSHALL

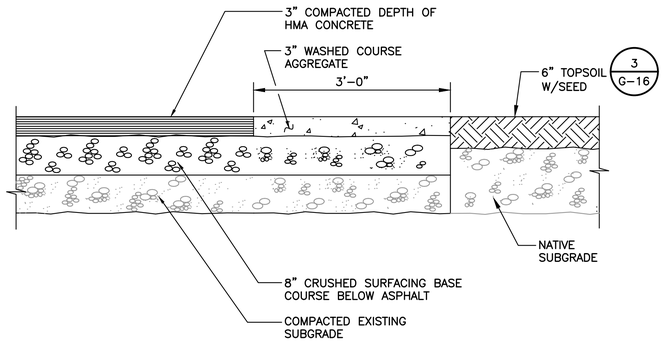

NOTES:

1. WASHED AGGREGATE SHALL MEET THE FOLLOWING CRITERIA:

SIEVE SIZE	PERCENT PASSING
1-1/2"	100
1"	65-85
3/4" - 5/8"	5-30
3/8"	0-5

1 TYP SITE PAVING AND SHOULDER DETAIL

NOT TO SCALE

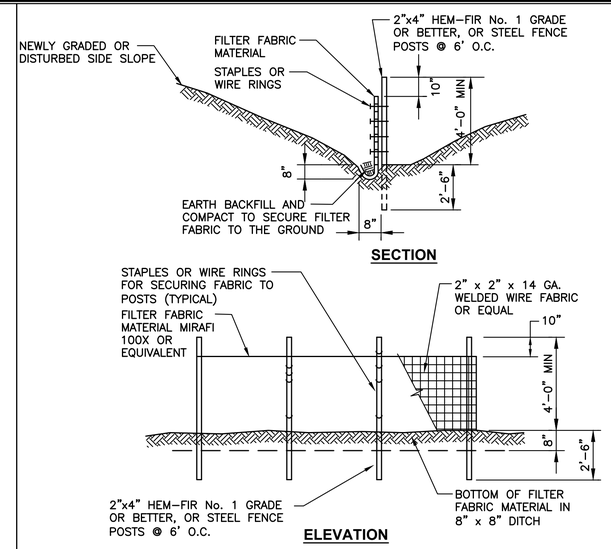

NOTES:

1. WHERE POSSIBLE, MAINTAIN NATURAL VEGETATION FOR SILTATION CONTROL.
2. TEMPORARY SILTATION CONTROL SHALL BE CONSTRUCTED BY PLACING FILTER FABRIC FENCES ACROSS SWALES UTILIZING FILTER SYSTEM PRIOR TO DISCHARGE.
3. ALL TEMPORARY SILTATION CONTROL SHALL BE MAINTAINED IN A SATISFACTORY CONDITION UNTIL SUCH TIME THAT CLEARING AND/OR CONSTRUCTION IS COMPLETED AND SURFACE RESTORATION HAS BEEN COMPLETED.
4. RETURN SILTATION CONTROL AREAS TO ORIGINAL GROUND CONDITIONS, UNLESS SPECIFICALLY DIRECTED OTHERWISE BY THE ENGINEER.

2 TYP SILT FENCE

NOT TO SCALE

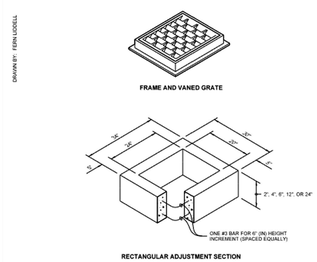

PIPE ALLOWANCES	
PIPE MATERIAL	MAXIMUM NOMINAL PIPE DIAMETER (INCHES)
REINFORCED CR. PLAIN CONCRETE	12"
ALL METAL PIPE	15"
CPSDP ✱ (STD. SPEC. SECT. 9-05.20)	12"
SOLID WALL PVC (STD. SPEC. SECT. 9-05.12(1))	15"
PROFILE WALL PVC (STD. SPEC. SECT. 9-05.12(2))	15"

✱ CORRUGATED POLYETHYLENE STORM SEWER PIPE

NOTES

1. As acceptable alternatives to the rebar shown in the **PRECAST BASE SECTION**, fibers (placed according to the Standard Specifications), or wire mesh having a minimum area of 0.12 square inches per foot shall be used with the minimum required rebar shown in the **ALTERNATIVE PRECAST BASE SECTION**. Wire mesh shall not be placed in the knockouts.
2. The knockout diameter shall not be greater than 20" (in). Knockouts shall have a wall thickness of 2" (in) minimum to 2.5" (in) maximum. Provide a 1.5" (in) minimum gap between the knockout wall and the outside of the pipe. After the pipe is installed, fill the gap with joint mortar in accordance with **Standard Specification Section 9-04.3**.
3. The maximum depth from the finished grade to the lowest pipe invert shall be 5' (ft).
4. The frame and grate may be installed with the flange down, or integrally cast into the adjustment section with flange up.
5. The Precast Base Section may have a rounded floor, and the walls may be sloped at a rate of 1 : 24 or steeper.
6. The opening shall be measured at the top of the **Precast Base Section**.
7. All pickup holes shall be grouted full after the basin has been placed.

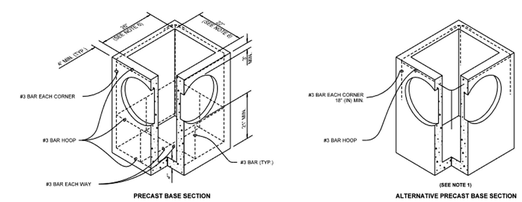

Julie Heilman 2020.09.01 07:52:50 -07'00'

CATCH BASIN TYPE 1

STANDARD PLAN B-5.20-03

SHEET 1 OF 1 SHEET

APPROVED FOR PUBLICATION
Roark, Steve Digitally signed by Roark, Steve Date: 2020.09.09 08:02:20 -07'00'
STATE DESIGN ENGINEER
Washington State Department of Transportation

3 TYP CATCH BASIN TYPE 1

NOT TO SCALE

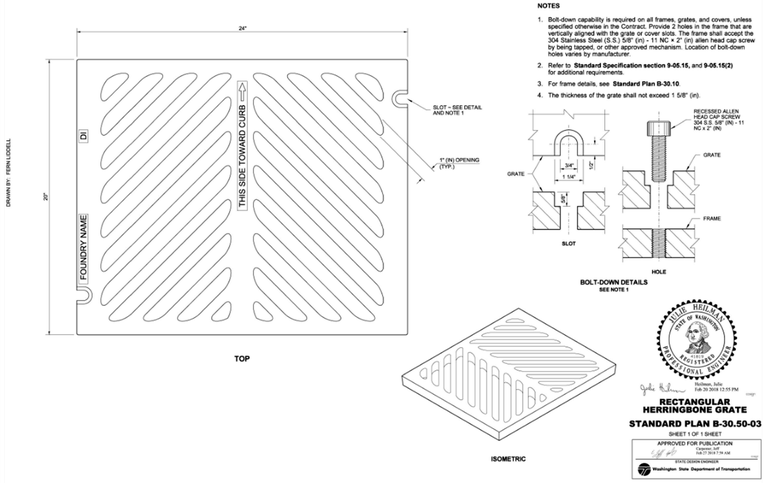

NOTES

1. Bolt-down capability is required on all frames, grates, and covers, unless specified otherwise in the Contract. Provide 2 holes in the frame that are vertically aligned with the grate or cover slots. The frame shall accept the 304 Stainless Steel (S.S.) 5/8" (in) - 11 NC x 2" (in) allen head cap screw by being tapped, or other approved mechanism. Location of bolt-down holes varies by manufacturer.
2. Refer to **Standard Specification section 9-05.15,** and **9-05.15(2)** for additional requirements.
3. For frame details, see **Standard Plan B-30.10**.
4. The thickness of the grate shall not exceed 1 5/8" (in).

Julie Heilman 2020.09.01 07:52:50 -07'00'

RECTANGULAR HERRINGBONE GRATE

STANDARD PLAN B-30.50-03

SHEET 1 OF 1 SHEET

APPROVED FOR PUBLICATION
Roark, Steve Digitally signed by Roark, Steve Date: 2020.09.09 08:02:20 -07'00'
STATE DESIGN ENGINEER
Washington State Department of Transportation

4 TYP CATCH BASIN FRAME AND GRATE

NOT TO SCALE

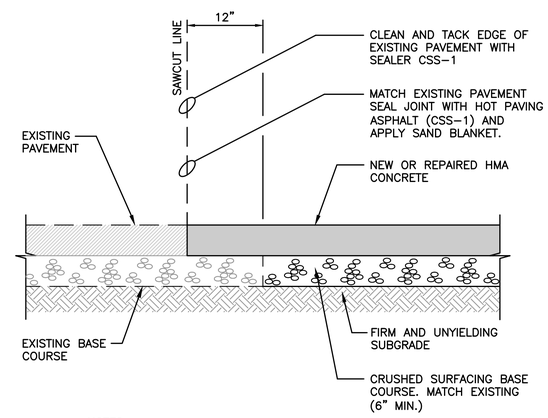

NOTES:

1. ALL JOINTS SHALL BE FULL DEPTH SAW CUT.
2. ALL CATCH BASINS, VALVES AND OTHER APPURTENANCES SHALL BE TACK COATED WITH AN ASPHALT EMULSION PRIOR TO THE APPLICATION OF ASPHALT CONCRETE.
3. COMPACTED ASPHALT CONCRETE SHALL NOT EXTEND MORE THAN 1/4" ABOVE THE EXISTING SURFACE.

5 TYP ASPHALT BUTT JOINT DETAIL

NOT TO SCALE

0 1" 2"

TWO INCHES AT FULL SCALE. IF NOT, SCALE ACCORDINGLY

Gray & Osborne, Inc.
CONSULTING ENGINEERS
1130 RAINIER AVENUE SOUTH, SUITE 300
SEATTLE, WASHINGTON 98144

DATE: NOV 2022 | DRAWN: PGM | CHECKED: KPS | APPROVED: RLP

No.	REVISION	DATE	APPD

NEIL PHILLIP STEWART, STATE OF WASHINGTON, 53159, REGISTERED PROFESSIONAL ENGINEER, 01/21/22

RUSSELL L. PORTER, STATE OF WASHINGTON, 35488, REGISTERED PROFESSIONAL ENGINEER

CITY OF LACEY
THURSTON COUNTY WASHINGTON
BEACHCREST WELLFIELD pH IMPROVEMENTS
GENERAL DETAILS

SHEET: **G-14**
SHEET: **14 of 81**
JOB NO.: 19520
DWG:G_DET2

L:\LACEY\19520 pH Predesign and S17 Facilities Design\PLANSET\G-Sheets\G_DET2.dwg, 11/21/2022 10:04 AM, PHILIP MARSHALL
DRAWN BY: FERN LOCKLL

VALVE BOX LIDS SHALL BE PER THE ABOVE

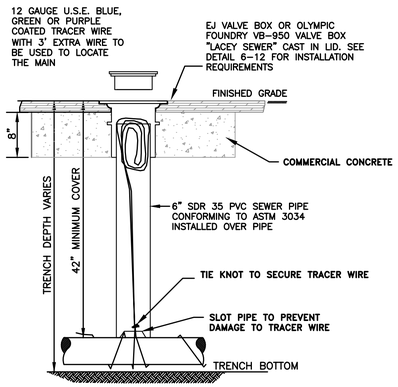

GENERAL NOTE:
1. TRACER WIRE ACCESS PORT SHALL BE INSTALLED EVERY 500 FEET WHEN NO APPURTENANCES ARE CONNECTED TO IT.

CITY OF LACEY, WASHINGTON
DEPT. OF PUBLIC WORKS

TRACER WIRE ACCESS PORT VALVE BOX INSTALLATION

APPROVED / CITY ENGINEER			DWG. NO.
			3-11
DES	DWN	CKD	DATE
WHO	WHO	RAS	12/15/2014

DG3-11.DWG

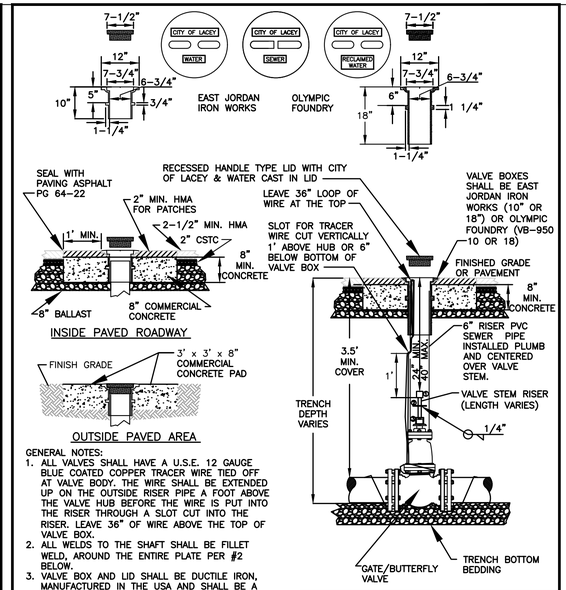

GENERAL NOTES:
1. ALL VALVES SHALL HAVE A U.S.E. 12 GAUGE BLUE COATED COPPER TRACER WIRE TIED OFF AT VALVE BODY. THE WIRE SHALL BE EXTENDED UP ON THE OUTSIDE RISER PIPE A FOOT ABOVE THE VALVE HUB BEFORE THE WIRE IS PUT INTO THE RISER THROUGH A SLOT CUT INTO THE RISER. LEAVE 36" OF WIRE ABOVE THE TOP OF VALVE BOX.
2. ALL WELDS TO THE SHAFT SHALL BE FILLET WELD, AROUND THE ENTIRE PLATE PER #2 BELOW.
3. VALVE BOX AND LID SHALL BE DUCTILE IRON, MANUFACTURED IN THE USA AND SHALL BE A MATCHED SET FROM THE SAME MANUFACTURER.
4. EXISTING SURFACES PAVED WITH PERMEABLE MATERIALS SHALL BE REPLACED IN-KIND WHERE FEASIBLE IN CONFORMANCE WITH 4B.180 TRENCH BACKFILL AND RESTORATION.

VALVE STEM EXTENSION LEGEND
① VALVE OPERATING NUT OR 1-7/8" X 1-7/8" X 2" HIGH GRADE STEEL WELDED TO GUIDE PLATE.
② 3/16" THICK X 5 1/5" DIA STEEL GUIDE PLATE WELDED TO RISER SHAFT. 2"X2"X 3/16" SQUARE STRUCTURAL STEEL
③ TUBING TO FIT OPERATING NUT. LENGTH AS REQUIRED.

DG3-11.DWG

CITY OF LACEY, WASHINGTON
DEPT. OF PUBLIC WORKS

STANDARD VALVE BOX INSTALLATION

APPROVED / CITY ENGINEER			DWG. NO.
			3-12
DES	DWN	CKD	DATE
WHO	WHO	RAS	08/28/2017

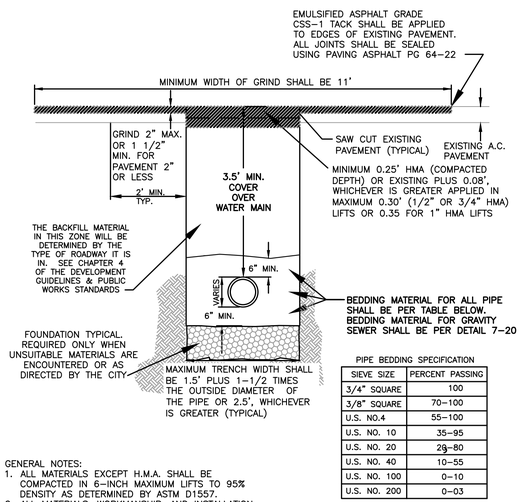

PIPE BEDDING SPECIFICATION

SIEVE SIZE	PERCENT PASSING
3/4" SQUARE	100
3/8" SQUARE	70-100
U.S. NO.4	55-100
U.S. NO. 10	35-95
U.S. NO. 20	26-80
U.S. NO. 40	10-55
U.S. NO. 100	0-10
U.S. NO. 200	0-03

GENERAL NOTES:
1. ALL MATERIALS EXCEPT H.M.A. SHALL BE COMPACTED IN 6-INCH MAXIMUM LIFTS TO 95% DENSITY AS DETERMINED BY ASTM D1557.
2. ALL MATERIALS, WORKMANSHIP, AND INSTALLATION SHALL BE IN CONFORMANCE WITH THE WSDOT STANDARD SPECIFICATIONS FOR ROAD, BRIDGE AND MUNICIPAL CONSTRUCTION AS AMENDED BY CITY OF LACEY STANDARDS.
3. KEEP TRENCH BOTTOM COMPACTED WITH UNIFORM GRADE. NO TEMPORARY SUPPORTS, I.E. BLOCKS, WILL BE ALLOWED TO SUPPORT PIPE. TRENCH BOTTOM SHALL BE TO GRADE PRIOR TO PIPE INSTALLATION.
4. **WHENEVER GROUND WATER IS PRESENT A BARRIER SHALL BE INSTALLED ABOVE THE BEDDING.**
5. **EXISTING SURFACES PAVED WITH PERMEABLE MATERIALS SHALL BE REPLACED IN-KIND WHERE FEASIBLE IN CONFORMANCE WITH 4B.180 TRENCH BACKFILL AND RESTORATION.**

DG3-26.DWG

CITY OF LACEY, WASHINGTON
DEPT. OF PUBLIC WORKS

PIPE ZONE BEDDING FOR ALL PRESSURE PIPES

APPROVED / CITY ENGINEER			DWG. NO.
			3-26
DES	DWN	CKD	DATE
WHO	WHO	RAS	08/24/2017

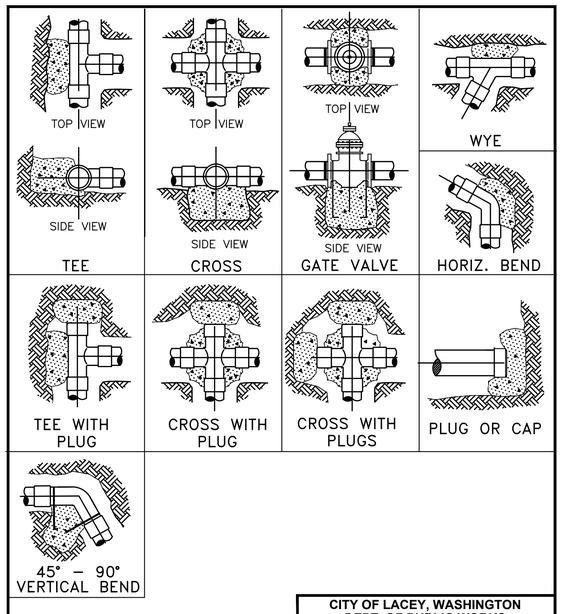

GENERAL NOTES:
1. CONCRETE THRUST BLOCKING TO BE POURED AGAINST UNDISTURBED EARTH.
2. PLASTIC BARRIER SHALL BE PLACED BETWEEN ALL THRUST BLOCKS AND FITTINGS.
3. ANCHOR REBAR SHALL BE 5/8" MINIMUM DIAMETER

CITY OF LACEY, WASHINGTON
DEPT. OF PUBLIC WORKS

STANDARD BLOCKING DETAIL

APPROVED / CITY ENGINEER			DWG. NO.
			3-14
DES	DWN	CKD	DATE
WHO	WHO	RAS	12/15/2014

THRUST LOADS

THRUST AT FITTINGS IN POUNDS AT 200 POUNDS PER SQUARE INCH OF WATER PRESSURE

PIPE DIAMETER	90° BEND	45° BEND	22-1/2° BEND	11-1/4° BEND	DEAD END OR TEE
4"	3,600	2,000	1,000	500	2,600
6"	8,000	4,400	2,300	1,200	5,700
8"	14,300	7,700	4,000	2,000	10,100
10"	22,300	12,100	6,200	3,100	15,800
12"	32,000	17,400	8,900	4,500	22,700
14"	43,600	23,600	12,100	6,100	30,800
16"	57,000	30,800	15,700	7,900	40,300

NOTES:

1. **BLOCKING SHALL BE COMMERCIAL CONCRETE POURED IN PLACE AGAINST UNDISTURBED EARTH. FITTING SHALL BE ISOLATED FROM CONCRETE THRUST BLOCK WITH PLASTIC OR SIMILAR MATERIAL.**
2. **TO DETERMINE THE BEARING AREA OF THE THRUST BLOCK IN SQUARE FEET (S.F.):**
   EXAMPLE : 12" - 90° BEND IN SAND AND GRAVEL
   32,000 LBS 3000 LB/S.F. = 10.7 S.F. OF AREA
3. **AREAS MUST BE ADJUSTED FOR OTHER PIPE SIZE, PRESSURES AND SOIL CONDITIONS.**
4. **BLOCKING SHALL BE ADEQUATE TO WITHSTAND FULL TEST PRESSURE AS WELL AS TO CONTINUOUSLY WITHSTAND OPERATING PRESSURE UNDER ALL CONDITIONS OF SERVICE.**

SAFE SOIL BEARING LOADS

FOR HORIZONTAL THRUSTS WHEN THE DEPTH OF COVER OVER THE PIPE EXCEEDS 2 FEET

SOIL	POUNDS PER SQUARE FOOT
MUCK, PEAT	0
SOFT CLAY	1,000
SAND	2,000
SAND & GRAVEL	3,000
SAND & GRAVEL CEMENTED WITH CLAY	4,000
HARD SHALE	10,000

DG3-11.DWG

CITY OF LACEY, WASHINGTON
DEPT. OF PUBLIC WORKS

STANDARD BLOCKING DETAIL

APPROVED / CITY ENGINEER			DWG. NO.
			3-15
DES	DWN	CKD	DATE
WHO	WHO	RAS	12/15/2014

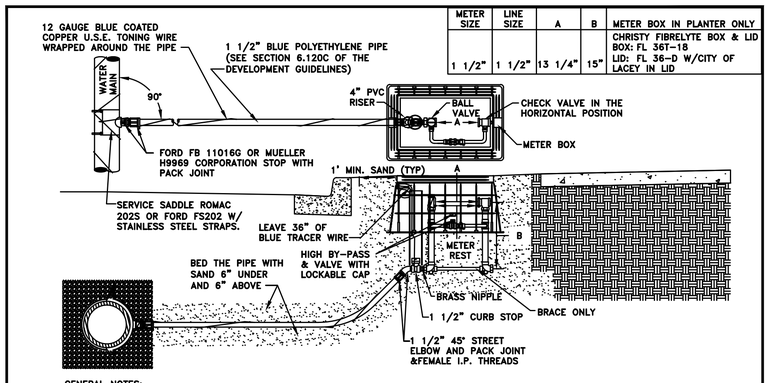

METER SIZE	LINE SIZE	A	B	METER BOX IN PLANTER ONLY
1 1/2"	1 1/2"	13 1/4"	15"	CHRISTY FIBRELYTE BOX & LID BOX: FL 36T-18 LID: FL 36-D W/CITY OF LACEY IN LID

GENERAL NOTES:
1. METER BOXES SHALL NOT BE INSTALLED IN CONCRETE OR CONCRETE DRIVEWAYS. WHEN NECESSARY CREATE PLANTERS FOR METER BOX INSTALLATION.
2. STAINLESS STEEL INSERTS ARE REQUIRED FOR ALL PACK JOINTS.
3. THE SETTER ANGLE STOP SHALL BE A MINIMUM OF 1" ABOVE BOTTOM OF METER BOX. INSIDE OF BOX SHALL BE CLEAN OF EXCESS SAND OR DEBRIS.
4. FILL THE ENTIRE AREA AROUND AND UNDER THE METER BOX WITH A MINIMUM 1' OF SAND.
5. ALL BRASS AND COPPER SHALL BE LOW LEAD COMPLIANT.
6. COPPER METER SETTERS, HIGH BY-PASS STYLE: FORD VBH 76-15HB, MUELLER B2423-29900015-15, AY-McDONALD 20-R615WDFF665.
7. BALL VALVE CURB STOP: FORD B11-666-NL, MUELLER B20283N, AY-McDONALD 76101-1-1/2".
8. BALL VALVE CORPORATION STOP: FORD FB1101-6G-NL, MUELLER E25029N, AY-McDONALD: 74704B-33-1-1/2".

DG6-3.0.DWG

CITY OF LACEY, WASHINGTON
DEPT. OF PUBLIC WORKS

1 1/2" METER SERVICE W/HIGH BYPASS

APPROVED / CITY ENGINEER			DWG. NO.
			6-3.0
DES	DWN	CKD	DATE
WHO	WHO	RAS	08/24/2017

0 1" 2"
TWO INCHES AT FULL SCALE. IF NOT, SCALE ACCORDINGLY

Gray & Osborne, Inc.
CONSULTING ENGINEERS
1130 RAINIER AVENUE SOUTH, SUITE 300
SEATTLE, WASHINGTON 98144

DATE: NOV 2022	DRAWN: PGM	CHECKED: KPS	APPROVED: RLP

No.	REVISION	DATE	APPD

CITY OF LACEY
THURSTON COUNTY WASHINGTON
BEACHCREST WELLFIELD pH IMPROVEMENTS
GENERAL DETAILS

SHEET: G-15
SHEET: 15 of 81
JOB NO.: 19520
DWG:G_DET2

L:\LACEY\19520 pH Predesign and S17 Facilities Design\PLANSET\G-Sheets\G_DET2.dwg, 11/21/2022 10:04 AM, PHILIP MARSHALL

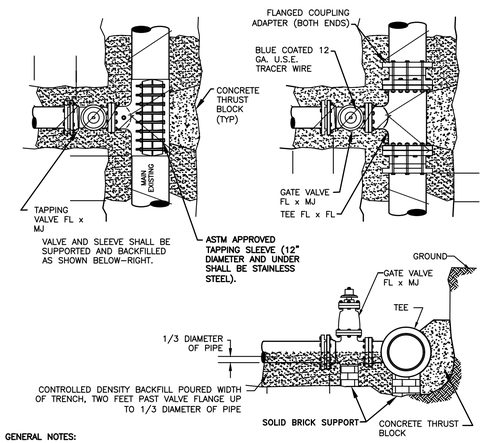

GENERAL NOTES:

1. 11 MIL. PLASTIC OR CONSTRUCTION FABRIC SHALL BE WRAPPED AROUND PIPE AND FITTINGS BEFORE THRUST BLOCK OR CDF BACKFILL ARE POURED.
2. CONTROLLED DENSITY FILL SHALL CONSIST OF 1750# SAND, 1750# PEA GRAVEL, 230# WATER, 141# CEMENT, 6 OUNCES WATER REDUCING AGENT PER 100# CEMENT.
3. THE EXISTING MAIN, TAPPING SLEEVE AND VALVE SHALL BE SUPPORTED THROUGHOUT THE ENTIRE PROCESS WHEN TAPPING THE EXISTING WATER MAIN.
4. CONNECT TO EXISTING TRACER WIRE, IF PRESENT.
5. CUTTING AC PIPE REQUIRES PROPER AC CUTTING AND DISPOSAL PRACTICES BE FOLLOWED. REFER TO OLYMPIC AIR POLLUTION CONTROL AUTHORITY DOCUMENT AND AWWA AC PIPE CUTTING DOCUMENT. AC PIPE CUTTER SHALL BE CERTIFIED.
6. ADDITIONAL VALVES MAYBE REQUIRED WITH CUT IN OFF TEE.

DG6-11.0.DWG

CITY OF LACEY, WASHINGTON DEPT. OF PUBLIC WORKS			
CONNECTION TO EXISTING MAIN			
APPROVED / CITY ENGINEER			DWG. NO. 6-11.0
DES. LRW	DWN. WHO	CKD. RAS	DATE 08/24/2017

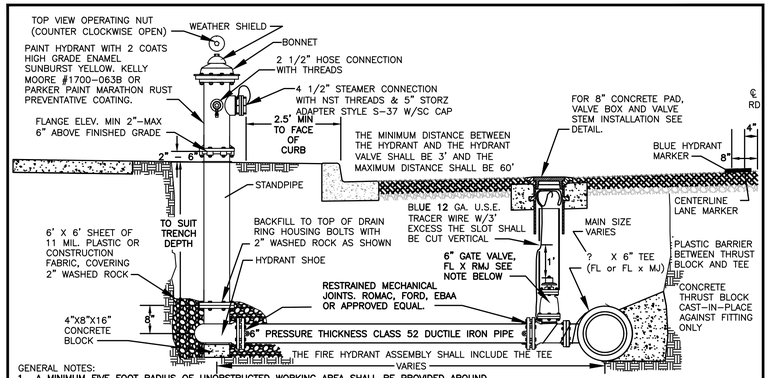

GENERAL NOTES:

1. A MINIMUM FIVE FOOT RADIUS OF UNOBSTRUCTED WORKING AREA SHALL BE PROVIDED AROUND ALL HYDRANTS. THE UNOBSTRUCTED AREA SHALL INCLUDE BUT NOT BE LIMITED TO TREES, SHRUBS, PLANTS, VAULTS, FDC AND METERS.
2. HYDRANT SHALL BE WATEROUS PACER, M & H RELIANT STYLE 929, AMERICAN AVK, KENNEDY K-81, MUELLER CENTURION AND EJIW 5CD250 WATER MASTER.
3. GATE VALVES SHALL BE RESILIENT WEDGE NRS WITH O-RING SEALS. VALVE ENDS SHALL BE MECHANICAL JOINT BY ANSI FLANGES. VALVES SHALL CONFORM TO AWWA C515. VALVES SHALL BE MUELLER, M&H, KENNEDY, CLOW R/W WATEROUS SERIES 500 OR EJIW FLOWMASTER.
4. REMOVE FACTORY CHAINS HOLDING CAPS.
5. WHEN DISTANCE BETWEEN HYDRANT AND VALVE EXCEED 20 FEET, FIELDLOK GASKETS SHALL BE INSTALLED.
6. INSTALLATION OF THE TYPE 2E TWO WAY BLUE REFLECTIVE HYDRANT MARKER SHALL BE THE RESPONSIBILITY OF THE CONTRACTOR.
7. THE TYPE 2E TWO WAY BLUE REFLECTIVE HYDRANT MARKER SHALL BE ALIGNED WITH THE OUTSIDE EDGE OF THE LANE MARKER OR 8" FROM THE CENTER OF THE RPM TO THE CENTER LINE OF THE ROADWAY. SEE DETAIL.

DG6-8.0.DWG

CITY OF LACEY, WASHINGTON DEPT. OF PUBLIC WORKS			
FIRE HYDRANT ASSEMBLY			
APPROVED / CITY ENGINEER			DWG. NO. 6-8.0
DES WHO	DWN WHO	CKD RAS	DATE 08/24/2017

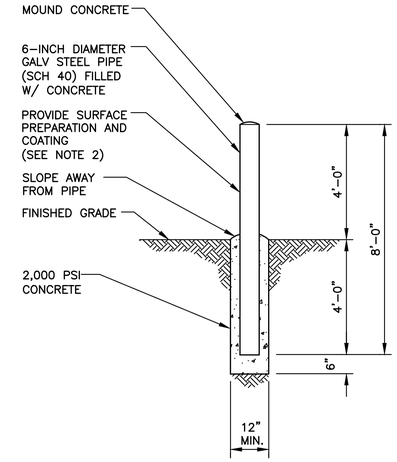

NOTES:

1. THE EXACT LOCATION OF THE GUARD POSTS SHALL BE DETERMINED BY THE ENGINEER IN THE FIELD
2. GUARD POSTS SHALL BE PAINTED WITH TWO (2) COATS OF "STEELCOTE FEDERAL YELLOW" PAINT. SEE SPECIFICATION SECTION 09900 FOR ADDITIONAL INFORMATION.

1 TYP — **FIXED GUARD POST DETAIL**
NOT TO SCALE

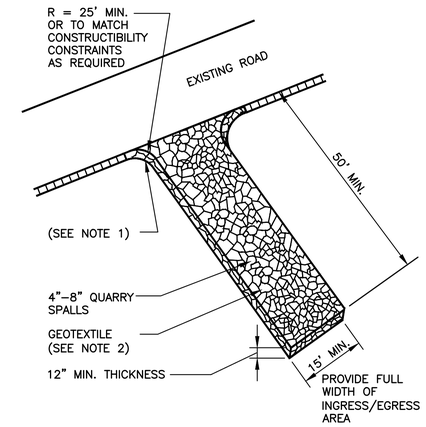

NOTES:

1. THE AT BOTH CORNERS AND FROM THE EDGE OF THE ROADWAY TO THE RADIUS RETURNS, PROVIDE GEOTEXTILE FOR SOIL STABILIZATION AND MINIMUM OF 0.15' CSBC UNDER THE QUARRY SPALLS.
2. GEOTEXTILE SHALL MEET THE MATERIAL REQUIREMENTS LISTED IN TC DDEM, VOL II, BMP C-105.

2 TYP — **CONSTRUCTION ENTRANCE**
NOT TO SCALE

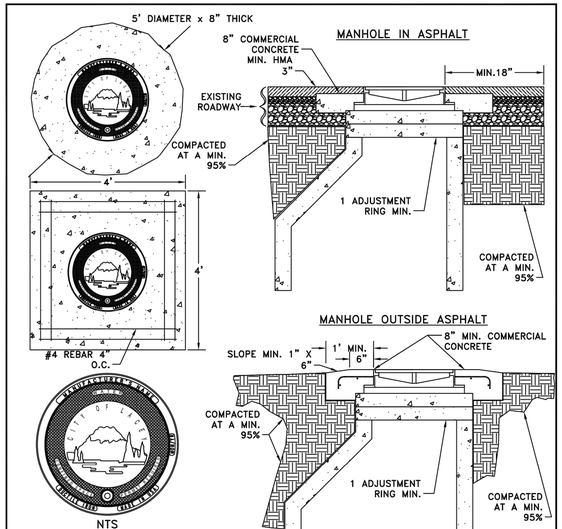

GENERAL NOTES:

1. ALL CONCRETE PADS FOR MANHOLES OUTSIDE THE ASPHALT SHALL HAVE REINFORCING STEEL AS SHOWN ABOVE, DEFORMED BAR TO MEET ASTM A615 GRADE 60 FY=60,000 P.S.I.
2. ALL MANHOLE FRAME AND COVER ASSEMBLIES SHALL BE EJCO OR OLYMPIC FOUNDRY, WSDOT STYLE #41 WITH THE CITY LOGO STAMPED IN IT, DUCTILE IRON AND MANUFACTURED IN THE USA.
3. ADJUST GRADE RINGS WITH BRICK WEDGES OR GROUT. NO WOOD OR ROCKS SHALL BE USED AS ADJUSTMENT SPACERS.
4. DEVIATION FROM COMPACTION STANDARDS MAY BE APPROVED BY THE DIRECTOR, OR DESIGNEE, WHERE RECOMMENDED BY THE LICENSED PROFESSIONAL ENGINEER FOR PLANNED OR EXISTING INFILTRATION FACILITIES.
5. EXISTING SURFACES PAVED WITH PERMEABLE MATERIALS SHALL BE REPLACED IN-KIND WHERE FEASIBLE IN CONFORMANCE WITH 4B.180 TRENCH BACKFILL AND RESTORATION.

DG6-16.0.DWG

CITY OF LACEY, WASHINGTON DEPT. OF PUBLIC WORKS			
WATER MANHOLE LOGO COVER & FRAME INSTALLATION			
APPROVED / CITY ENGINEER			DWG. NO. 6-16.0
DES. WHO	DWN. WHO	CKD. RAS	DATE 08/24/2017

DRAWN BY: FERN LUDELL

NOTES

1. No steps are required when height is 4' or less.
2. The bottom of the precast catch basin may be sloped to facilitate cleaning.
3. The rectangular frame and grate may be installed with the flange up or down. The frame may be cast into the adjustment section.
4. Knockouts shall have a wall thickness of 2" (in) minimum to 2.5" (in) maximum. Provide a 1.5" (in) minimum gap between the knockout wall and the outside of the pipe. After the pipe is installed, fill the gap with joint mortar in accordance with **Standard Specification Section 9-04.3.**

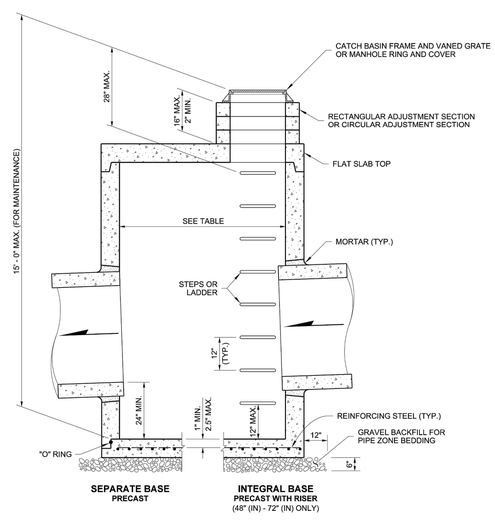

CATCH BASIN DIMENSIONS

CATCH BASIN DIAMETER	MIN. WALL THICKNESS	MIN. BASE THICKNESS	MAXIMUM KNOCKOUT SIZE	MINIMUM DISTANCE BETWEEN KNOCKOUTS
48"	4"	6"	36"	8"
54"	4.5"	8"	42"	8"
60"	5"	8"	48"	8"
72"	6"	8"	60"	12"
84"	8"	12"	72"	12"
96"	8"	12"	84"	12"
120"	10"	12"	96"	12"
144"	12"	12"	108"	12"

PIPE ALLOWANCES

CATCH BASIN DIAMETER	PIPE MATERIAL WITH MAXIMUM INSIDE DIAMETER				
	CONCRETE	ALL METAL	CPSSP ① PP ④	SOLID WALL PVC ②	PROFILE WALL PVC ③
48"	24"	30"	24"	30"	30"
54"	30"	36"	30"	36"	36"
60"	36"	42"	36"	42"	42"
72"	42"	54"	42"	48"	48"
84"	54"	60"	54"	48"	48"
96"	60"	72"	60"	48"	48"
120"	66"	84"	60"	48"	48"
144"	78"	96"	60"	48"	48"

① Corrugated Polyethylene Storm Sewer Pipe (See **Standard Specification Section 9-05.20)**
② (See **Standard Specification Section 9-05.12(1))**
③ (See **Standard Specification Section 9-05.12(2))**
④ Polypropylene Pipe (See **Standard Specification Section 9-05.24)**

Heilman, Julie
Feb 20 2018 12:49 PM

CATCH BASIN TYPE 2

STANDARD PLAN B-10.20-02

SHEET 1 OF 1 SHEET

APPROVED FOR PUBLICATION
Chapman, Jeff
Mar 2 2018 10:01 AM
STATE DESIGN ENGINEER
Washington State Department of Transportation

3 TYP — **TYPE 2 CATCH BASIN DETAIL**
NOT TO SCALE

0 1" 2"
TWO INCHES AT FULL SCALE. IF NOT, SCALE ACCORDINGLY

Gray & Osborne, Inc.
CONSULTING ENGINEERS
1130 RAINIER AVENUE SOUTH, SUITE 300
SEATTLE, WASHINGTON 98144

DATE: NOV 2022	DRAWN: PGM	CHECKED: KPS	APPROVED: RLP

No.	REVISION	DATE	APPD

CITY OF LACEY
WASHINGTON
THURSTON COUNTY
BEACHCREST WELLFIELD pH IMPROVEMENTS
GENERAL DETAILS

SHEET: G-16
SHEET: 16 of 81
JOB NO.: 19520
DWG:G_DET2

L:\LACEY\19520 pH Predesign and S17 Facilities Design\PLANSET\G-Sheets\G_DET2.dwg, 11/21/2022 10:04 AM, PHILIP MARSHALL

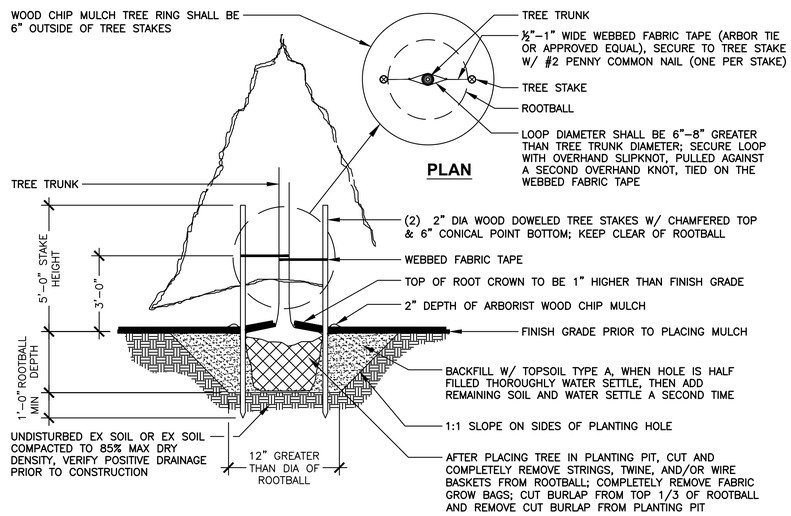

1 TYP EVERGREEN TREE PLANTING

NOT TO SCALE

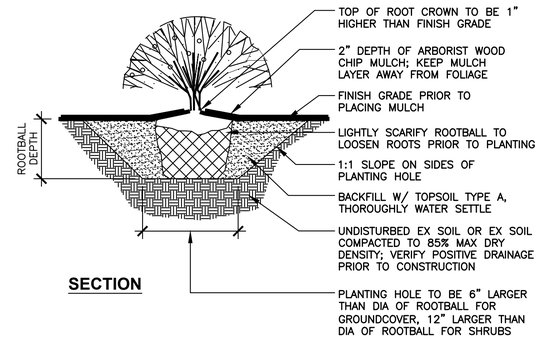

2 TYP GROUNDCOVER & SHRUB PLANTING

NOT TO SCALE

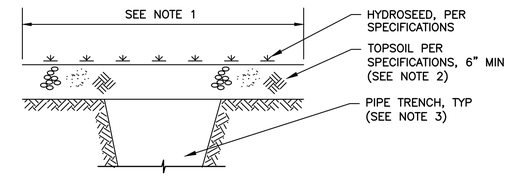

NOTES:

1. WIDTH SHALL BE TO LIMITS DISTURBED BY CONSTRUCTION ACTIVITIES.
2. LEVEL DISTURBED AREAS PRIOR TO HYDROSEEDING AND ADD IMPORTED TOPSOIL RAKED IN WITH EXISTING SOIL.
3. INSTALL PIPE PER DETAIL IF APPLICABLE.
4. SEE SPECIFICATION FOR ADDITIONAL INFORMATION.

3 TYP GRASS SURFACE RESTORATION

NOT TO SCALE

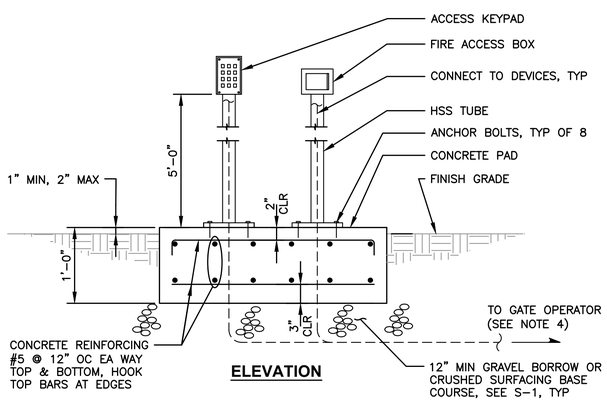

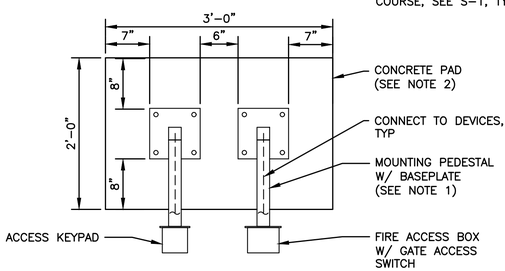

NOTES:

1. MOUNT PEDESTAL ON PAD WITH 4 CAST IN PLACE ANCHOR BOLTS. BOLTS, WASHERS, AND NUTS SHALL BE 316 SS, MINIMUM 1/2-INCH DIAMETER, 3-INCH EMBED.
2. MINIMUM PAD DIMENSIONS SHALL BE 3'-0" X 2'-0", OR 6-INCHES BEYOND EDGES OF THE MOUNTING PEDESTAL BASE PLATE, WHICHEVER IS LARGER.
3. SEE SPECIFICATION SECTION 02820 FOR ADDITIONAL INFORMATION.
4. SEE G-18 FOR SCHEMATIC PLAN, AND SEE ELECTRICAL SHEETS FOR CABLE AND CONDUIT REQUIREMENTS.

4 TYP ACCESS EQUIPMENT AND PEDESTAL DETAIL

SCALE: 3/4" = 1'-0"

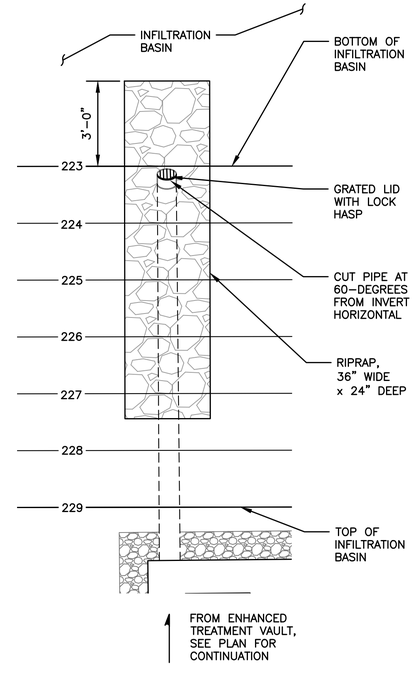

NOTES:

1. PROVIDE SIMILAR INSTALLATION FOR FLOW TO WASTE OUTFALL.

5 G-20 TREATMENT OUTFALL DETAIL

SCALE: 3/8"=1'-0"

0 1" 2"

TWO INCHES AT FULL SCALE. IF NOT, SCALE ACCORDINGLY

Gray & Osborne, Inc.
CONSULTING ENGINEERS
1130 RAINIER AVENUE SOUTH, SUITE 300
SEATTLE, WASHINGTON 98144

DATE: NOV 2022	DRAWN: PGM
CHECKED: KPS	APPROVED: RLP

No.	REVISION	DATE	APPD

CITY OF LACEY
THURSTON COUNTY WASHINGTON
BEACHCREST WELLFIELD pH IMPROVEMENTS
GENERAL DETAILS

SHEET: G-17
SHEET: 17 of 81
JOB NO.: 19520
DWG:G_DET2

L:\LACEY\19520 pH Predesign and S17 Facilities Design\PLANSET\G-Sheets\G_DET2.dwg, 11/21/2022 10:04 AM, PHILIP MARSHALL

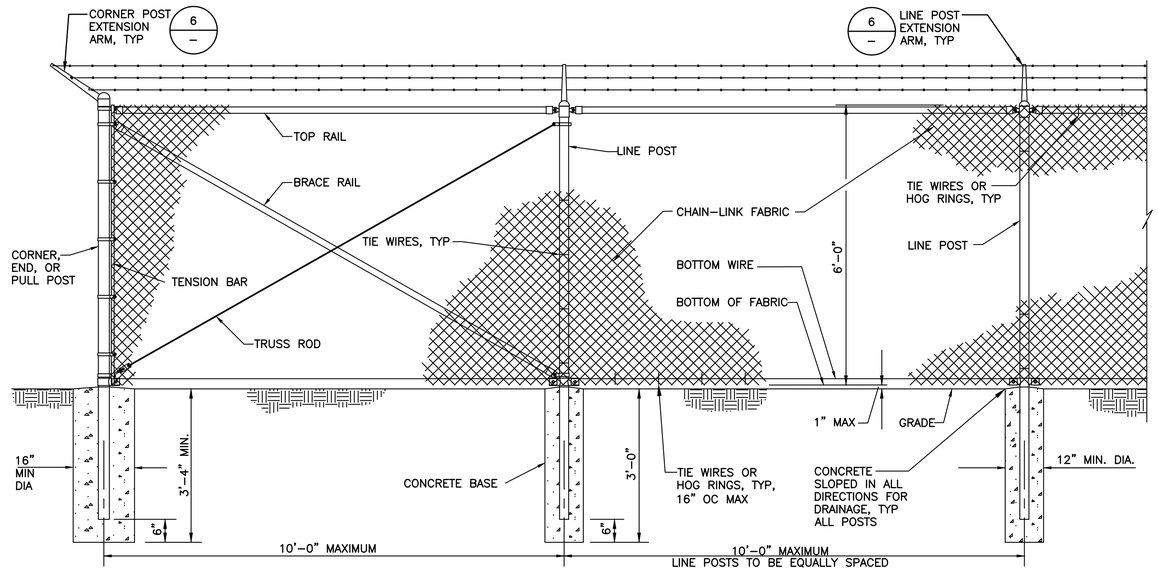

1 TYP **CHAIN-LINK SECURITY FENCE DETAIL**
NOT TO SCALE

NOTES:

1. CORNER POSTS SHALL BE INSTALLED AT ALL POINTS WHERE ALIGNMENT CHANGES 30° OR MORE AND AT ALL OTHER LOCATIONS AS REQUIRED.
2. WIRE TIES, HOG RINGS, RAILS, POSTS, AND BRACES SHALL BE CONSTRUCTED ON THE SECURE SIDE OF THE FENCE ALIGNMENT. CHAIN–LINK FABRIC SHALL BE PLACED ON THE SIDE OPPOSITE THE SECURE AREA.
3. TOP RAIL SHALL BE ATTACHED TO DOUBLE RAIL ENDS USING 3/8" CARRIAGE BOLTS.

NOTES:

1. SIGN TO BE LOCATED ON OPERATOR OR FENCE IN CLEAR VIEW TO GATE USERS.

2 – **MOVING GATE SIGN**
NOT TO SCALE

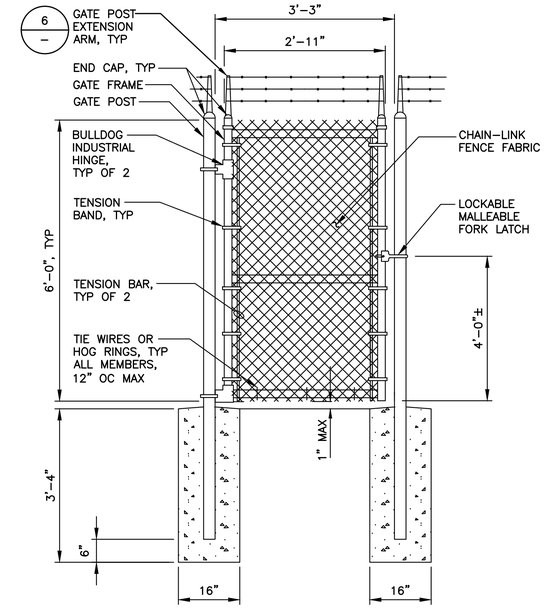

NOTES:

1. WIRE TIES, HOG RINGS, RAILS, POSTS, AND BRACES SHALL BE CONSTRUCTED ON THE SECURE SIDE OF THE FENCE ALIGNMENT. CHAIN–LINK FABRIC SHALL BE PLACED ON THE SIDE OPPOSITE THE SECURE AREA.
2. THE CITY WILL PROVIDE A PADLOCK FOR FORK LATCH.

3 TYP **PEDESTRIAN GATE DETAIL**
NOT TO SCALE

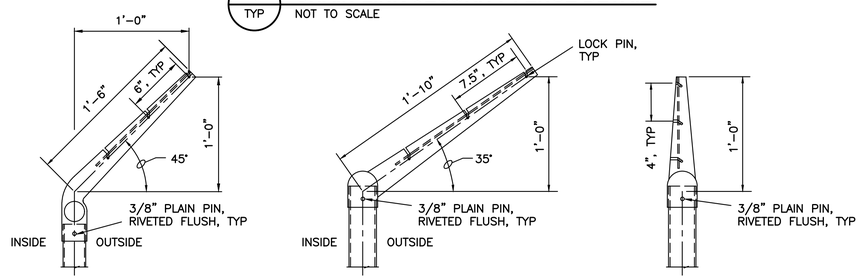

6 TYP **EXTENSION ARM DETAILS**
NOT TO SCALE

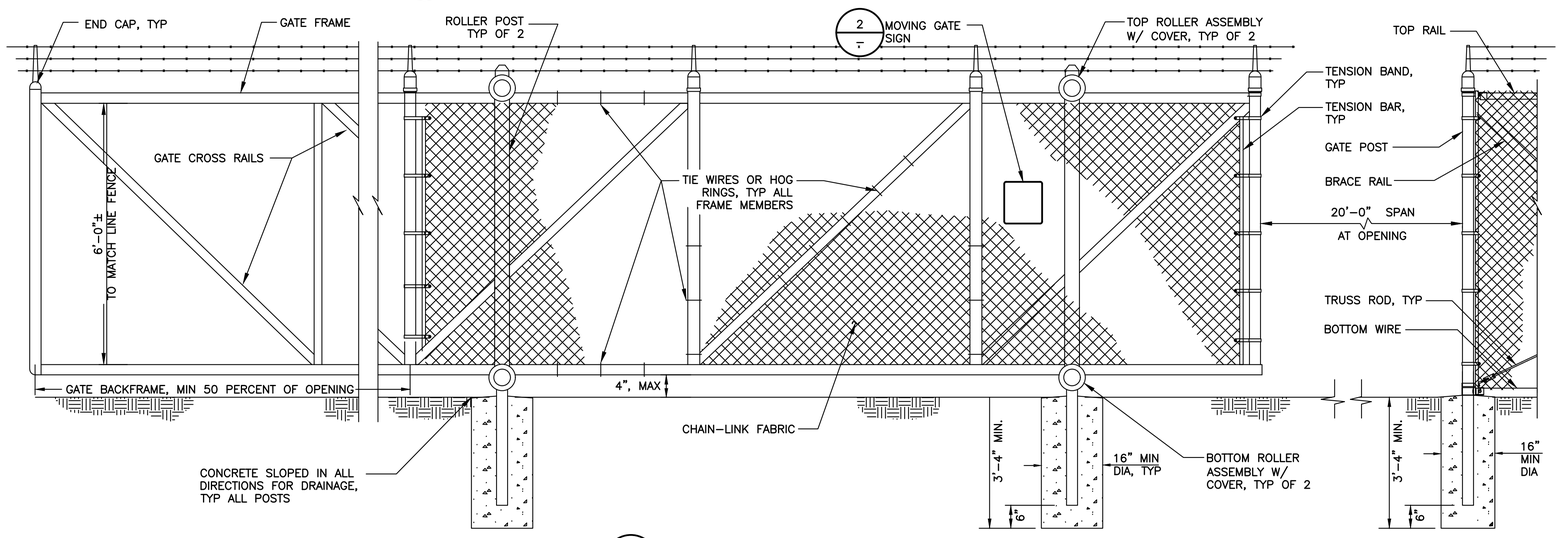

4 TYP **CANTILEVERED ROLLING GATE DETAIL**
NOT TO SCALE

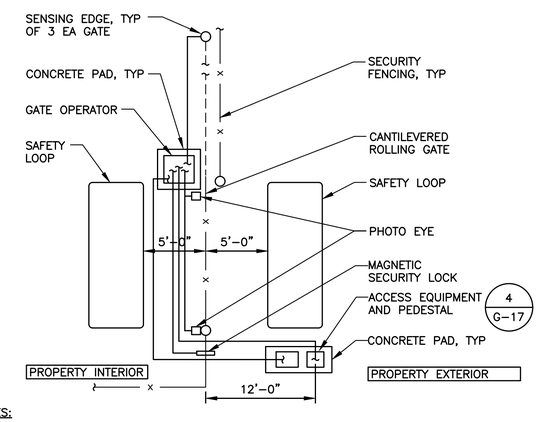

NOTES:

1. SEE ELECTRICAL SHEETS FOR ADDITIONAL INFORMATION ON CONDUIT AND CONDUCTORS.
2. SEE SPECIFICATIONS FOR ADDITIONAL INFORMATION ON OPERATION, SAFETY, AND OTHER SUPPORTING EQUIPMENT.
3. EGRESS GATE SHALL BE EQUIPPED WITH GATE, PHOTO–EYE, EXIT LOOP, SAFETY LOOPS (2X), MAGNETIC LATCH, SENSING EDGE (3X), AND OPERATOR WITH PAD (GO 02). INSTALLATION SHALL BE SIMILAR TO THAT SHOWN ABOVE.

5 TYP **GATE SCHEMATIC DETAIL**
NOT TO SCALE

0 1" 2"
TWO INCHES AT FULL SCALE. IF NOT, SCALE ACCORDINGLY

Gray & Osborne, Inc.
CONSULTING ENGINEERS
1130 RAINIER AVENUE SOUTH, SUITE 300
SEATTLE, WASHINGTON 98144

DATE: NOV 2022	
DRAWN: PGM	
CHECKED: KPS	
APPROVED: RLP	

No.	REVISION	DATE	APPD

CITY OF LACEY
THURSTON COUNTY WASHINGTON
BEACHCREST WELLFIELD pH IMPROVEMENTS
GENERAL DETAILS

SHEET: G-18
SHEET: 18 of 81
JOB NO.: 19520
DWG:G_DET3

L:\LACEY\19520 pH Predesign and S17 Facilities Design\PLANSET\G-Sheets\G_DET3.dwg, 11/21/2022 10:05 AM, PHILIP MARSHALL

THURSTON COUNTY STANDARD STORMWATER NOTES

1. A PRECONSTRUCTION MEETING SHALL BE HELD PRIOR TO THE START OF LAND DISTURBING ACTIVITY, CONSTRUCTION OR STAKING OF THE SITE. THE PRECONSTRUCTION MEETING SHALL INCLUDE STAFF FROM STORMWATER, WATER AND SEWER UTILITIES IF APPLICABLE.

2. ALL WORKMANSHIP AND MATERIALS SHALL BE IN ACCORDANCE WITH (IN ORDER) THE THURSTON COUNTY DRAINAGE DESIGN AND EROSION CONTROL MANUAL (DDECM, 2016), OTHER COUNTY STANDARDS, AND THE MOST CURRENT COPY OF THE STATE OF WASHINGTON STANDARD SPECIFICATIONS FOR ROAD, BRIDGE AND MUNICIPAL CONSTRUCTION (WSDOT/APWA), IN THAT ORDER

3. CONSTRUCTION STORMWATER PPOLUTION AND PREVENTION PLAN (SWPPP) CONSISTENT WITH THE REQUIREMENTS SET FORTH IN VOLUME II IN THE DDECM AND INCLUDES ALL 13 ELEMENTS OR AS REQUIRED IN THE CONSTRUCTION STORMWATER GENERAL PERMIT. BMPS SELECTED FOR IMPLEMENTATION ARE TO BE APPROVED BY ECOLOGY AND ARE TO CONFORM TO THE CURRENT STORMWATER MANAGEMENT MANUAL FOR WESTERN WASHINGTON.

4. THE SWPPP AND A COPY OF THE APPROVED STORMWATER PLANS SHALL BE ONSITE AT ALL TIMES WHEN CONSTRUCTION IS IN PROGRESS. WHENEVER INSPECTION AND/OR MONITORING REVEALS THAT THE BMPS ARE INADEQUATE, DUE TO DISCHARGE, TRACK OUT, OR POTENTIAL TO DISCHARGE, BMPS OR DESIGN CHANGES SHALL BE IMPLEMENTED AS SOON AS POSSIBLE.

   IF DEFICIENCIES ARE IDENTIFIED THE FOLLOWING ACTIONS SHALL BE TAKEN BY THE COUNTY. IT SHALL BE AT THE DISCRETION OF THE INSPECTOR WHICH ACTION WILL BE TAKEN BASED ON THE SEVERITY OR HISTORY OF THE SITE.
   - A. 1ST ACTION TAKEN IS A VERBAL WARNING TO THE FOREMAN OR PERSON OVERSEEING THE SITE.
   - B. 2ND ACTION TAKEN IS A WRITTEN INSPECTION WITH ACTIONS TO BE TAKEN SIGNED BY THE FOREMAN OR PERSON OVERSEEING THE SITE.
   - C. 3RD ACTION TAKEN IF CORRECTIVE ACTIONS ARE NOT TAKEN, COMPLETED OR ISSUES CONTINUE TO BE FOUND WILL BE A WRITTEN NOTICE AND A STOP WORK ORDER SHALL BE POSTED.

5. SEASONAL WORK LIMITATIONS – FROM OCTOBER 1 THROUGH APRIL 30, CLEARING, GRADING, AND OTHER SOIL DISTURBING ACTIVITIES WILL NOT BE PERMITTED UNLESS IT IS SHOWN TO THE SATISFACTION OF THE COUNTY THAT SILT–LADEN RUNOFF WILL BE PREVENTED FROM LEAVING THE SITE THROUGH A COMBINATION OF THE FOLLOWING:
   - SITE CONDITIONS INCLUDING EXISTING VEGETATIVE COVERAGE, SLOPE, SOIL TYPE, AND PROXIMITY TO RECEIVING WATERS; AND
   - LIMITATIONS ON ACTIVITIES AND THE EXTENT OF DISTURBED AREAS; AND
   - PROPOSED EROSION AND SEDIMENT CONTROL MEASURES
     THE COUNTY MAY EXPAND OR RESTRICT THE SEASONAL LIMITATION OR SITE DISTURBANCE BASED ON SITE INSPECTIONS, LOCAL WEATHER CONDITIONS, OR OTHER INFORMATION.
   - IF, DURING THE COURSE OF ANY CONSTRUCTION ACTIVITY OR SOIL DISTURBANCE DURING THE SEASONAL LIMITATION PERIOD, SILT–LADEN RUNOFF LEAVING THE CONSTRUCTION SITE CAUSES A VIOLATION OF THE SURFACE WATER QUALITY STANDARD; OR
   - IF CLEARING AND GRADING LIMITS OR EROSION AND SEDIMENT CONTROL MEASURES SHOWN IN THE APPROVED PLAN ARE NOT MAINTAINED, THE COUNTY MAY TAKE ENFORCEMENT ACTION, INCLUDING BUT NOT LIMITED TO A NOTICE OF VIOLATION, ADMINISTRATIVE ORDER, FINE/PENALTY, STOP–WORK ORDER, OR CORRECTION NOTICE.

6. EXPOSED SOILS SHALL NOT BE LEFT EXPOSED AND UNWORKED FOR MORE THAN 2 DAYS BETWEEN (OCTOBER 1 – APRIL 30) OR 7 DAYS BETWEEN (MAY 1 – SEPT. 30).

7. ENSURE THAT CONCRETE WASHING AND CURING WATERS, WASTE STREAMS GENERATED FROM CONCRETE GRINDING AND SAWING, EXPOSED AGGREGATE PROCESSES, DEWATERING CONCRETE VAULTS, CONCRETE PUMPING AND MIXER WASHOUT IS PERFORMED OFFSITE OR IN DESIGNATED CONCRETE WASHOUT AREAS ONLY. DO NOT WASH OUT CONCRETE TRUCKS ONTO THE GROUND, OR INTO STORM DRAINS, OPEN DITCHES, STREETS, OR STREAMS. DO NOT DUMP EXCESS CONCRETE ON SITE, EXCEPT IN DESIGNATED CONCRETE WASHOUT AREAS. REFER TO THE DDECM OR STORMWATER MANAGEMENT MANUAL FOR WESTERN WASHINGTON FOR BMPS. CONCRETE SPILLAGE OR CONCRETE DISCHARGE TO STORMWATER FACILITIES IS AN ILLICIT DISCHARGE.

8. APPLICANT SHALL COMPLY WITH ALL OTHER PERMITS AND OTHER REQUIREMENTS OF THE GOVERNING AUTHORITY OR AGENCY.

9. ALL STORM MAINS AND RETENTION/DETENTION AREAS SHALL BE STAKED FOR GRADE AND ALIGNMENT BY AN ENGINEERING OR SURVEY FIRM LICENSED TO PERFORM SUCH WORK.

10. STORM DRAIN PIPE MATERIALS SHALL BE AS SPECIFIED IN THE DRAINAGE DESIGN AND EROSION CONTROL MANUAL. PIPE SIZE, SLOPE, COVER, ETC., SHALL BE AS SPECIFIED IN VOLUME III OF THE DDCEM.

11. THE STORM DRAINAGE SYSTEM SHALL BE CONSTRUCTED ACCORDING TO APPROVED PLANS ON FILE WITH THE JURISDICTION. ANY MATERIAL DEVIATION FROM THE APPROVED PLANS WILL REQUIRE WRITTEN APPROVAL FROM THE JURISDICTION.

12. SPECIAL STRUCTURES, OIL/WATER SEPARATORS, AND OUTLET CONTROLS SHALL BE INSTALLED PER PLANS AND MANUFACTURER'S RECOMMENDATIONS.

13. WASHINGTON LAW REQUIRES THAT THE RULES ADOPTED BY WASHINGTON UTILITIES AND TRANSPORTATION COMMISSION BE FOLLOWED. THOSE RULES ARE SET FORTH IN RCW 19.122 AND REQUIRES ANYONE PERFORMING ANY TYPE OF DIGGING TO CALL AT LEAST TWO BUSINESS DAYS BEFORE DIGGING. DIAL 811 OR 1–800–424–5555 OR VISIT WWW.CALLBEFOREYOUDIG.ORG.

14. ALL SURVEYING AND STAKING SHALL BE PERFORMED BY AN ENGINEERING OR SURVEYING FIRM CAPABLE OF PERFORMING SUCH WORK. THE ENGINEER OR SURVEYOR DIRECTING SUCH WORK SHALL BE LICENSED BY THE STATE OF WASHINGTON.

15. THE MINIMUM STAKING OF STORM SEWER SYSTEMS SHALL BE AS FOLLOWS:
    - A. STAKE LOCATION OF ALL CATCH BASINS/MANHOLES AND OTHER FIXTURES FOR GRADE AND ALIGNMENT.
    - B. STAKE LOCATION, SIZE, AND DEPTH OF RETENTION/DETENTION FACILITY.
    - C. STAKE FINISHED GRADE OF ALL STORMWATER FEATURES, INCLUDING BUT NOT LIMITED TO CATCH BASIN/MANHOLE RIM ELEVATIONS, OVERFLOW STRUCTURES, WEIRS, AND INVERT ELEVATIONS OF ALL PIPES IN CATCH BASINS, MANHOLES, AND THOSE PIPES THAT DAYLIGHT.

16. FINAL ELEVATIONS, LOCATIONS, SLOPES, GRADES, ROADWAY ALIGNMENTS, ETC., SHALL BE BASED ON A FIELD SURVEY CONDUCTED BY A LICENSED PROFESSIONAL SURVEYOR AND SHALL BE STAMPED BY THE SURVEYOR AS A RECORD OF THE FINAL CONSTRUCTED LOCATION AND ELEVATION OF FACILITIES SHOWN.

17. A CONTINUOUS TONING WIRE SHALL BE BURIED THE ENTIRE LENGTH OF ALL STORMWATER PIPE AND BE LOCATED AND ATTACHED TO THE TOP OF THE PIPE. THE TONING WIRE SHALL BE 12–GAUGE INSULATED GREEN TONING WIRE. THE TONING WIRE SHALL END IN CATCH BASINS, MANHOLES, OTHER STRUCTURES, AND BE PLACED IN AN ORGANIZED MANNER ON A STAINLESS STEEL CONCRETE WEDGE ANCHOR AND/OR HOOK WITHIN SIX (6) INCHES OF LID OR GRATE OR END OF PIPE IF NO STRUCTURES PRESENT I.E., CROSS CULVERT WITH A MINIMUM OF FIVE (5) FOOT COIL OF WIRE SO IT WILL NOT FALL OFF AND CAN BE ACCESSED WITHOUT ENTERING THE STRUCTURE. THE TONING WIRE SHALL BE TESTED FOR CONTINUITY PRIOR TO ACCEPTANCE. ALL SPLICES WILL BE MADE WITH COPPERHEAD SNAKEBITE CONNECTORS OR 3M DBR MOISTURE DISPLACEMENT CONNECTORS SPLICE KITS DESIGNED FOR IN–GROUND USE.

18. UNDERGROUND WARNING TAPE SHALL BE PLACED APPROXIMATELY TWELVE INCHES (12") ABOVE THE TOP OF PIPE INDICATING STORMWATER PIPE.

19. ALL CULVERTS SHALL BE A MINIMUM OF TWELVE INCHES (12") DIAMETER AND OF SUFFICIENT LENGTH TO PROVIDE A MINIMUM 3:1 SLOPE FROM THE EDGE OF THE DRIVEWAY OR ROADWAY TO THE BOTTOM OF THE DITCH. THE CULVERT SHALL EXTEND ONE FOOT OUTSIDE THE DRIVEWAY OR ROADWAY RADIUS BEFORE THE BEVEL TO ALLOW FOR RIPRAP ARMORING TO PREVENT SLOUGHING OF THE BASE/CRUSHED ROCK INTO THE DITCH. CULVERTS SHALL HAVE BEVELED ENDS TO MATCH THE SIDE SLOPE. DUCTILE IRON PIPE SHALL BE CUT SHORT TO ALLOW FOR TRANSITION TO PVC OR PE BEVELED PIPE ENDS THAT ARE EXPOSED IN OPEN CONVEYANCE SYSTEM.

20. THE STORM DRAINAGE SYSTEM SHALL BE CONSTRUCTED ACCORDING TO ACCEPTED PLANS ON FILE WITH THE COUNTY. ANY MATERIAL DEVIATION FROM THE PLANS WILL REQUIRE WRITTEN ACCEPTANCE FROM THE DRAINAGE MANUAL ADMINISTRATOR OR DESIGNEE.

21. CATCH BASIN GRATES SHALL BE DIRECTIONAL GRATES WHERE GRADE OR SLOPE IS GREATER THAN OR EQUAL TO 1%.

22. A COPY OF THE ACCEPTED STORMWATER PLANS MUST BE ON THE JOB SITE WHENEVER CONSTRUCTION IS IN PROGRESS.

23. ALL BUILDING DOWNSPOUTS ON COMMERCIAL SITES SHALL BE CONNECTED TO THE STORM DRAINAGE SYSTEM, UNLESS OTHERWISE ACCEPTABLE TO THE COUNTY.

24. THE CONTRACTOR SHALL BE RESPONSIBLE FOR PROVIDING ADEQUATE SAFEGUARDS, SAFETY DEVICES, PROTECTIVE EQUIPMENT, FLAGGERS, AND ANY OTHER NEEDED ACTIONS TO PROTECT THE LIFE, HEALTH, AND SAFETY OF THE PUBLIC, AND TO PROTECT PROPERTY IN CONNECTION WITH THE PERFORMANCE OF WORK. ANY WORK WITHIN THE TRAVELED RIGHT–OF–WAY THAT MAY INTERRUPT NORMAL TRAFFIC FLOW SHALL REQUIRE AT LEAST ONE FLAGGER FOR EACH LANE OF TRAFFIC AFFECTED. ALL SECTIONS OF THE CURRENT WSDOT STANDARD SPECIFICATIONS FOR TRAFFIC CONTROL OR MUTCD SHALL APPLY.

25. IT SHALL BE THE SOLE RESPONSIBILITY OF THE CONTRACTOR TO OBTAIN STREET USE AND OTHER RELATED OR REQUIRED PERMITS PRIOR TO ANY CONSTRUCTION ACTIVITY IN THE COUNTY RIGHT–OF–WAY. IT SHALL ALSO BE THE RESPONSIBILITY OF THE CONTRACTOR TO OBTAIN ALL REQUIRED PERMITS PRIOR TO ANY CONSTRUCTION.

26. ALL NEW STORM DRAIN PIPELINES SHALL BE CLOSED–CIRCUIT TELEVISION (CCTV) INSPECTED AND AIR PRESSURE TESTED (APT) BY THE DEVELOPER, CONTRACTOR OR APPLICANT AFTER ALL UNDERGROUND UTILITIES ARE INSTALLED AND COMPACTION OF THE ROADWAY SUBGRADE IS COMPLETE. REQUIRED PRE–NOTIFICATION: THE CONTRACTOR SHALL NOTIFY THE COUNTY STORM AND SURFACE WATER UTILITY AT 360–867–2099 AT LEAST 3 WORKING DAYS IN ADVANCE OF THE FIRST TELEVISION INSPECTION.

27. THERMO–PLASTIC DRAINAGE MARKINGS ARE REQUIRED FOR ALL STRUCTURES IN THE ROADWAY. PLEASE CONTACT THE STORM AND SURFACE WATER UTILITY AT 360–867–2099 FOR MARKING STANDARDS.

28. THE PROJECT ENGINEER SHALL INSPECT DRAINAGE AND EROSION CONTROL FACILITIES PERIODICALLY DURING CONSTRUCTION. THE PROJECT ENGINEER SHALL PROVIDE, AT A MINIMUM, INSPECTION CERTIFICATION FOR THE DRAINAGE AND EROSION CONTROL FACILITIES FOLLOWING ANY STORM EVENT WITH PRECIPITATION EQUAL TO OR EXCEEDING 2 INCHES IN A 24–HOUR PERIOD. FAILURE TO SUBMIT CERTIFICATION TO THE COUNTY WITHIN 24 HOURS FOLLOWING SUCH AN EVENT MAY RESULT IN A STOP WORK ORDER BEING PLACED ON THE PROJECT.

29. ALL CASTINGS OR STRUCTURES NOT IN PAVEMENT AREAS, AND NOT IN THE ROADWAY RIGHT–OF–WAY OF A PAVED ROAD, SHALL BE SET SIX INCHES (6") ABOVE FINISHED GRADE. THEY SHALL HAVE A CAST IRON FRAME AND COVER GROUTED TO JUST UNDER THE TOP OF THE FRAME AND A CONCRETE PAD EXTENDING OUT 2 FEET IN ALL DIRECTIONS.

30. ALL DISTURBED AREAS SHALL BE SEEDED AND MULCHED OR SIMILARLY STABILIZED TO THE SATISFACTION OF THURSTON COUNTY. FOR SITE WHERE GRASS HAS BEEN PLANTED THROUGH HYDROSEEDING, FINAL WILL NOT OCCUR UNTIL THE GRASS HAS BEEN THOROUGHLY ESTABLISHED (90% ESTABLISHMENT), UNLESS OTHERWISE APPROVED BY THE COUNTY.

31. NO TREES OR SHRUBS MAY BE PLANTED WITHIN 25 FEET OF INLET OR OUTLET PIPES OR MANMADE DRAINAGE STRUCTURES SUCH AS SPILLWAYS OR FLOW SPREADERS. SPECIES WITH ROOTS THAT SEEK WATER, SUCH AS WILLOW OR POPLAR, SHALL BE AVOIDED WITHIN 50 FEET OF PIPES OR MANMADE STRUCTURES.

32. TCC 18.16.020 BONDING OF DRAINAGE IMPROVEMENTS SHALL NOT BE ALLOWED AND FACILITIES WILL BE CONSTRUCTED AND COMPLETE PRIOR TO FINAL.

TEMPORARY COVER PRACTICES:

1. DISTURBED AREAS WHICH ARE TO REMAIN WITHOUT PERMANENT COVER FOR MORE THAN 30 DAYS, SHALL BE STABILIZED BY PROVIDING TEMPORARY SEEDING, MULCHING, MATTING, OR CLEAR PLASTIC COVERING AS A GUARD AGAINST EROSION.

FILTER FENCE

1. THE FILTER FABRIC SHALL BE PURCHASED IN A CONTINUOUS ROLL CUT TO THE LENGTH OF THE BARRIER TO AVOID USE OF JOINTS. WHEN JOINTS ARE NECESSARY, FILTER CLOTH SHALL BE SPLICED TOGETHER ONLY AT A SUPPORT POST, WITH A MINIMUM 6 INCH OVERLAP, AND BOTH ENDS SECURELY FASTENED TO THE POST.

2. POSTS SHALL BE SPACED A MAXIMUM OF 6 FEET APART AND DRIVEN SECURELY INTO THE GROUND A MINIMUM OF 30 INCHES (WHERE PHYSICALLY POSSIBLE).

3. A TRENCH SHALL BE EXCAVATED APPROXIMATELY 8 INCHES WIDE AND 8 INCHES DEEP ALONG THE LINE OF POSTS AND UPSLOPE FROM THE BARRIER. THE TRENCH SHALL BE CONSTRUCTED TO FOLLOW THE CONTOUR.

4. WHEN SILT FILM FILTER FABRIC IS USED, A WIRE MESH SUPPORT FENCE SHALL BE FASTENED SECURELY TO THE UPSLOPE SIDE OF THE POSTS USING TIE WIRES, HOG RINGS, OR HEAVY–DUTY WIRE STAPLES AT LEAST 1 INCH LONG. THE WIRE SHALL EXTEND INTO THE TRENCH A MINIMUM OF 4 INCHES AND SHALL NOT EXTEND MORE THAN 36 INCHES ABOVE THE ORIGINAL GROUND SURFACE.

5. SILT FILM FILTER FABRIC SHALL BE WIRED TO THE FENCE, AND 20 INCHES OF THE FABRIC SHALL EXTEND INTO THE TRENCH. THE FABRIC SHALL NOT EXTEND MORE THAN 36 INCHES ABOVE THE ORIGINAL GROUND SURFACE. FILTER FABRIC SHALL NOT BE STAPLED TO EXISTING TREES. OTHER TYPES OF FABRIC MAY BE STAPLED TO THE FENCE.

6. WHEN EXTRA–STRENGTH OR MONOFILAMENT FABRIC AND CLOSER POST SPACING ARE USED, THE WIRE MESH SUPPORT FENCE MAY BE ELIMINATED. IN SUCH A CASE, THE FILTER FABRIC IS STAPLED OR WIRED DIRECTLY TO THE POSTS WITH ALL OTHER PROVISIONS OF FILTER FENCE NOTE 5 APPLYING. EXTRA CARE SHOULD BE USED WHEN JOINING OR OVERLAPPING THESE STIFFER FABRICS.

7. FILTER FABRIC FENCES SHALL BE REMOVED WHEN THEY HAVE SERVED THEIR USEFUL PURPOSE, BUT NOT BEFORE THE UPSLOPE AREA HAS BEEN PERMANENTLY STABILIZED. RETAINED SEDIMENT MUST BE REMOVED AND PROPERLY DISPOSED OF, OR MULCHED AND SEEDED.

8. INSPECT IMMEDIATELY AFTER EACH RAINFALL, AND AT LEAST DAILY DURING PROLONGED RAINFALL. REPAIR AS NECESSARY.

9. SEDIMENT MUST BE REMOVED WHEN IT REACHES APPROXIMATELY ONE THIRD THE HEIGHT OF THE FENCE, ESPECIALLY IF HEAVY RAINS ARE EXPECTED.

10. ANY SEDIMENT DEPOSITS REMAINING IN PLACE AFTER THE FILTER FENCE IS NO LONGER REQUIRED SHALL BE DRESSED TO CONFORM WITH THE EXISTING GRADE, PREPARED AND SEEDED.

STABILIZATION AND REMOVAL

1. ALL TEMPORARY EROSION AND SEDIMENT CONTROL MEASURES SHALL BE REMOVED WITHIN 30 DAYS AFTER FINAL SITE STABILIZATION IS ACHIEVED OR AFTER THE TEMPORARY "BEST MANAGEMENT PRACTICES" ARE NO LONGER NEEDED. TRAPPED SEDIMENT SHALL BE REMOVED OR STABILIZED ON SITE. DISTURBED SOIL AREAS RESULTING FROM REMOVAL SHALL BE PERMANENTLY STABILIZED.

HYDROSEEDING

1. CONSTRUCTION ACCEPTANCE WILL BE SUBJECT TO A WELL–ESTABLISHED GROUND COVER THAT FULFILLS THE REQUIREMENT OF THE APPROVED CONSTRUCTION PLANS

2. HYDROSEED (WITH MULCH) ALL DISTURBED AREA (2,000 LB/ACRE). APPLY EROSION CONTROL NETTING ON ALL SLOPES GREATER THAN 4:1, STAPLE NETTING TO SLOPES, AS REQUIRED.

3. FERTILIZER SHALL BE APPLIED AT 400# PER ACRE OF 10–20–20 (10 POUNDS PER 1100 SQUARE FEET) OR EQUIVALENT. DEVELOPMENTS ADJACENT TO WATER BODIES SHALL USE NON–PHOSPHORUS FERTILIZER.

STANDARD EROSION AND SEDIMENT CONTROL (ESC) PLAN NOTES

1. APPROVAL OF THIS EROSION AND SEDIMENTATION CONTROL (ESC) PLAN DOES NOT CONSTITUTE AN APPROVAL OF PERMANENT ROAD OR DRAINAGE DESIGN (E.G., SIZE AND LOCATION OF ROADS, PIPES, RESTRICTORS, CHANNELS, RETENTION FACILITIES, UTILITIES, ETC.).

2. THE IMPLEMENTATION OF THESE ESC PLANS AND THE CONSTRUCTION, MAINTENANCE, REPLACEMENT, AND UPGRADING OF THESE ESC FACILITIES IS THE RESPONSIBILITY OF THE CONTRACTOR UNTIL ALL CONSTRUCTION IS APPROVED.

3. THE BOUNDARIES OF THE CLEARING LIMITS SHOWN ON THIS PLAN SHALL BE CLEARLY FLAGGED BY A CONTINUOUS LENGTH OF SURVEY TAPE (OR FENCING, IF REQUIRED) PRIOR TO CONSTRUCTION. DURING THE CONSTRUCTION PERIOD, NO DISTURBANCE BEYOND THE CLEARING LIMITS SHALL BE PERMITTED. THE CLEARING LIMITS SHALL BE MAINTAINED BY THE CONTRACTOR FOR THE DURATION OF CONSTRUCTION.

4. THE ESC FACILITIES SHOWN ON THIS PLAN MUST BE CONSTRUCTED PRIOR TO OR IN CONJUNCTION WITH ALL CLEARING AND GRADING SO AS TO ENSURE THAT THE TRANSPORT OF SEDIMENT TO SURFACE WATERS, DRAINAGE SYSTEMS, AND ADJACENT PROPERTIES IS MINIMIZED.

5. THE ESC FACILITIES SHOWN ON THIS PLAN ARE THE MINIMUM REQUIREMENTS FOR ANTICIPATED SITE CONDITIONS. DURING THE CONSTRUCTION PERIOD, THESE ESC FACILITIES SHALL BE UPGRADED AS NEEDED FOR UNEXPECTED STORM EVENTS AND MODIFIED TO ACCOUNT FOR CHANGING SITE CONDITIONS (E.G., ADDITIONAL SUMP PUMPS, RELOCATION OF DITCHES AND SILT FENCES, ETC.).

6. THE ESC FACILITIES SHALL BE INSPECTED DAILY BY THE CONTRACTOR AND MAINTAINED TO ENSURE CONTINUED PROPER FUNCTIONING. WRITTEN RECORDS SHALL BE KEPT OF WEEKLY REVIEWS OF THE ESC FACILITIES DURING THE WET SEASON (OCT. 1 TO APRIL 30) AND OF MONTHLY REVIEWS DURING THE DRY SEASON (MAY 1 TO SEPT. 30).

7. ANY AREAS OF EXPOSED SOILS, INCLUDING ROADWAY EMBANKMENTS, THAT WILL NOT BE DISTURBED FOR TWO DAYS DURING THE WET SEASON OR SEVEN DAYS DURING THE DRY SEASON SHALL BE IMMEDIATELY STABILIZED WITH THE APPROVED ESC METHODS (E.G., SEEDING, MULCHING, PLASTIC COVERING, ETC.).

8. ANY AREA NEEDING ESC MEASURES THAT DO NOT REQUIRE IMMEDIATE ATTENTION SHALL BE ADDRESSED WITHIN FIFTEEN WORKING DAYS.

9. THE ESC FACILITIES ON INACTIVE SITES SHALL BE INSPECTED AND MAINTAINED A MINIMUM OF ONCE A MONTH OR WITHIN FORTY EIGHT HOURS FOLLOWING A STORM EVENT.

10. AT NO TIME SHALL MORE THAN ONE FOOT OF SEDIMENT BE ALLOWED TO ACCUMULATE WITHIN A CATCH BASIN. ALL CATCH BASINS AND CONVEYANCE LINES SHALL BE CLEANED PRIOR TO PAVING. THE CLEANING OPERATION SHALL NOT FLUSH SEDIMENT–LADEN WATER INTO THE DOWNSTREAM SYSTEM.

11. WHERE STRAW MULCH FOR TEMPORARY EROSION CONTROL IS REQUIRED, IT SHALL BE APPLIED AT A MINIMUM THICKNESS OF 3 INCHES.

12. PRIOR TO BEGINNING OF THE WET SEASON (OCT. 1), ALL DISTURBED AREAS SHALL BE REVIEWED TO IDENTIFY WHICH ONES CAN BE SEEDED IN PREPARATION FOR THE WINTER RAINS. DISTURBED AREAS SHALL BE SEEDED WITHIN ONE WEEK OF THE BEGINNING OF THE WET SEASON. A SKETCH MAP OF THOSE AREAS TO BE SEEDED AND IN THOSE AREAS TO REMAIN UNCOVERED SHALL BE SUBMITTED TO THE INSPECTOR. THE INSPECTOR CAN REQUIRE SEEDING OF ADDITIONAL AREAS IN ORDER TO PROTECT SURFACE WATERS, ADJACENT PROPERTIES, OR DRAINAGE FACILITIES.

EROSION/SEDIMENTATION CONTROL NOTES

1. ALL LIMITS OF CLEARING AND AREAS OF VEGETATION PRESERVATION SHALL BE OBSERVED DURING CONSTRUCTION.

2. ALL REQUIRED SEDIMENTATION/EROSION CONTROL FACILITIES MUST BE IN OPERATION PRIOR TO LAND CLEARING AND/OR OTHER CONSTRUCTION TO INSURE THAT SEDIMENT LADEN WATER DOES NOT ENTER THE NATURAL DRAINAGE SYSTEM. ALL EROSION AND SEDIMENT FACILITIES SHALL BE MAINTAINED IN A SATISFACTORY CONDITION UNTIL SUCH TIME THAT CLEARING AND /OR CONSTRUCTION IS COMPLETED AND THE POTENTIAL FOR ON–SITE EROSION HAS PASSED. THE IMPLEMENTATION, MAINTENANCE, REPLACEMENT AND ADDITIONS TO EROSION/SEDIMENTATION CONTROL SYSTEMS SHALL BE THE RESPONSIBILITY OF THE CONTRACTOR.

3. THE EROSION AND SEDIMENTATION CONTROL SYSTEMS DEPICTED ON THIS DRAWING ARE INTENDED TO BE MINIMUM REQUIREMENTS TO MEET ANTICIPATED SITE CONDITIONS. AS CONSTRUCTION PROGRESSES AND AS UNEXPECTED OR SEASONAL CONDITIONS DICTATE, THE CONTRACTOR SHOULD ANTICIPATE THAT MORE EROSION AND SEDIMENTATION CONTROL FACILITIES WILL BE NECESSARY TO INSURE COMPLETE SILTATION CONTROL ON THE PROPOSED SITE. DURING THE COURSE OF CONSTRUCTION, IT SHALL BE THE OBLIGATION AND RESPONSIBILITY OF THE CONTRACTOR TO ADDRESS ANY NEW CONDITIONS THAT MAY BE CREATED BY HIS ACTIVITIES AND TO PROVIDE ADDITIONAL FACILITIES, OVER AND ABOVE THE MINIMUM REQUIREMENTS, AS MAY BE NEEDED TO PROTECT ADJACENT PROPERTIES AND THE WATER QUALITY OF THE RECEIVING DRAINAGE SYSTEM.

4. AT NO TIME SHALL MORE THAN ONE FOOT OF SEDIMENT BE ALLOWED TO ACCUMULATE WITHIN A CATCH BASIN. THE CONTRACTOR SHALL BE RESPONSIBLE FOR REMOVING AND DISPOSING OF THE SEDIMENT. ALL CATCH BASINS, CONVEYANCE LINES AND DITCHES SHALL BE CLEANED PRIOR TO PAVING.

5. THE CONTRACTOR SHALL REMOVE MATERIAL DROPPED, WASHED OR TRACKED FROM VEHICLES ONTO THE COUNTY RIGHT–OF–WAY OR INTO THE EXISTING STORM DRAINAGE SYSTEM. DEBRIS SHALL NOT BE WASHED INTO THE STORM DRAINAGE SYSTEM.

6. TEMPORARY EROSION CONTROL FACILITIES SHALL BE INSPECTED WEEKLY AND MAINTAINED WITHIN 24 HOURS FOLLOWING A STORM EVENT. SEDIMENT SHALL BE REMOVED TO INSURE THE FACILITIES WILL FUNCTION PROPERLY. THE FACILITIES SHALL BE SATISFACTORILY MAINTAINED UNTIL CONSTRUCTION IS COMPLETED AND THE POTENTIAL FOR ON–SITE EROSION HAS PASSED.

7. ALL STORM DRAIN INLETS MADE OPERABLE DURING CONSTRUCTION SHALL BE PROTECTED SO THAT STORMWATER RUNOFF SHALL NOT ENTER THE CONVEYANCE SYSTEM WITHOUT FIRST BEING FILTERED OR OTHERWISE TREATED TO REMOVE SEDIMENT.

8. NO DISTURBED SOIL SHALL REMAIN UNSTABILIZED FOR MORE THAN TWO DAYS.

CONSTRUCTION SEQUENCE

A DETAILED CONSTRUCTION SEQUENCE IS NEEDED TO ENSURE THAT EROSION AND SEDIMENT CONTROL MEASURES ARE APPLIED AT THE APPROPRIATE TIMES. A RECOMMENDED CONSTRUCTION SEQUENCE IS PROVIDED BELOW:

1. HOLD THE PRE–CONSTRUCTION MEETING.

2. FLAG OR FENCE CLEARING LIMITS.

3. POST A SIGN WITH THE NAME AND PHONE NUMBER OF THE ESC SUPERVISOR AND THURSTON COUNTY PUBLIC WORKS.

4. INSTALL PERIMETER PROTECTION (FILTER FENCE, BRUSH BARRIER, ETC.).

5. CONSTRUCT SURFACE WATER CONTROLS (INTERCEPTOR DIKES, PIPE SLOPE DRAINS, ETC.) SIMULTANEOUSLY WITH CLEARING AND GRADING FOR PROJECT DEVELOPMENT.

6. MAINTAIN EROSION CONTROL MEASURES IN ACCORDANCE WITH THURSTON COUNTY STANDARDS AND MANUFACTURER'S RECOMMENDATIONS.

7. RELOCATE SURFACE WATER CONTROLS OR EROSION CONTROL MEASURES, OR INSTALL NEW MEASURES SO THAT AS SITE CONDITIONS CHANGE, THE EROSION AND SEDIMENTATION CONTROL IS ALWAYS IN ACCORDANCE WITH THE THURSTON COUNTY EROSION AND SEDIMENT CONTROL STANDARDS.

8. COVER ALL AREAS THAT WILL BE UNWORKED FOR MORE THAN SEVEN DAYS DURING THE DRY SEASON OR TWO DAYS DURING THE WET SEASON WITH STRAW, WOOD FIBER MULCH, COMPOST, PLASTIC SHEETING, OR EQUIVALENT.

9. STABILIZE ALL AREAS WITHIN SEVEN DAYS OF REACHING FINAL GRADE.

10. SEED ANY AREAS TO REMAIN UNWORKED FOR MORE THAN 30 DAYS.

11. UPON COMPLETION OF THE PROJECT, STABILIZE ALL DISTURBED AREAS AND REMOVE BMPS IF APPROPRIATE.

0 1" 2"
TWO INCHES AT FULL SCALE.
IF NOT, SCALE ACCORDINGLY

Gray & Osborne, Inc.
CONSULTING ENGINEERS
1130 RAINIER AVENUE SOUTH, SUITE 300
SEATTLE, WASHINGTON 98144

DATE: NOV 2022
DRAWN: PGM
CHECKED: KPS
APPROVED: RLP

No.	REVISION	DATE	APPD

PHILLIP STEWART — STATE OF WASHINGTON — 22720 — 11/21/22 — REGISTERED PROFESSIONAL ENGINEER

RUSSELL T. PORTER — STATE OF WASHINGTON — 35868 — REGISTERED PROFESSIONAL ENGINEER

CITY OF LACEY
THURSTON COUNTY WASHINGTON
BEACHCREST WELLFIELD pH IMPROVEMENTS
TESC NOTES

SHEET: G-19
SHEET: 19 of 81
JOB NO.: 19520
DWG:G_DET

L:\LACEY\19520 pH Predesign and S17 Facilities Design\PLANSET\G-Sheets\G_DET.dwg, 11/21/2022 10:05 AM, PHILIP MARSHALL

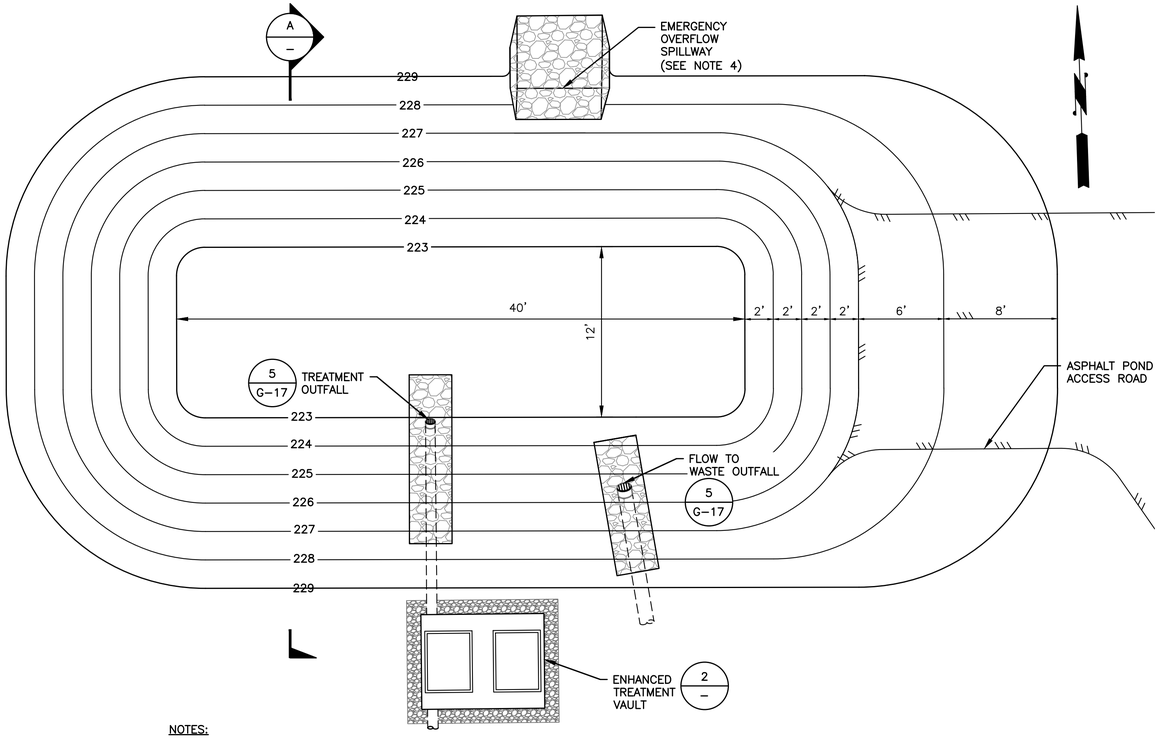

NOTES:

1. LIGHT TRACKED CONSTRUCTION EQUIPMENT SHALL BE USED FOR INFILTRATION BASIN CONSTRUCTION IN ORDER TO AVOID COMPACTION OF BASIN FLOOR.
2. PROVIDE GRASS SEEDING FOR ALL BASIN SURFACES, EXCEPT WHERE NOTED OTHERWISE ON THE PLANS. SEE SPECIFICATIONS FOR ADDITIONAL INFORMATION ON SEED TYPE AND LANDSCAPING REQUIREMENTS. FOR SLOPED POND SURFACES, PROVIDE PROFILE FUTERRA TRM 7010, OR EQUAL. ANCHOR ON POND EDGES AS SHOWN IN SECTION WITH MINIMUM 8-INCH BURIAL AT EDGES.
3. DESIGN OF STRUCTURES SHOWN HERE IS BASED ON THE THURSTON COUNTY DRAINAGE DESIGN MANUAL (2016).
4. PROVIDE 9-INCH DEPTH RIP RAP. SPILLWAY SHALL BE 6-FEET WIDE WITH SIDE SLOPES AT 1:1. TOP OF SPILLWAY SURFACE SHALL BE AT ELEVATION +/-228.5. GRADE IS AT ELEVATION +/- 229.0.

1 / G-9 **INFILTRATION BASIN PLAN**
SCALE: 3/16"=1'-0"

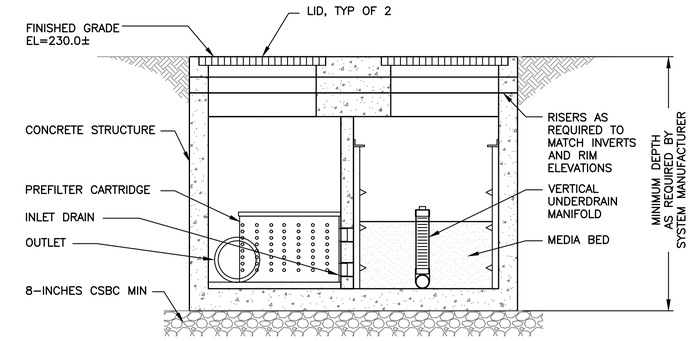

SECTION B

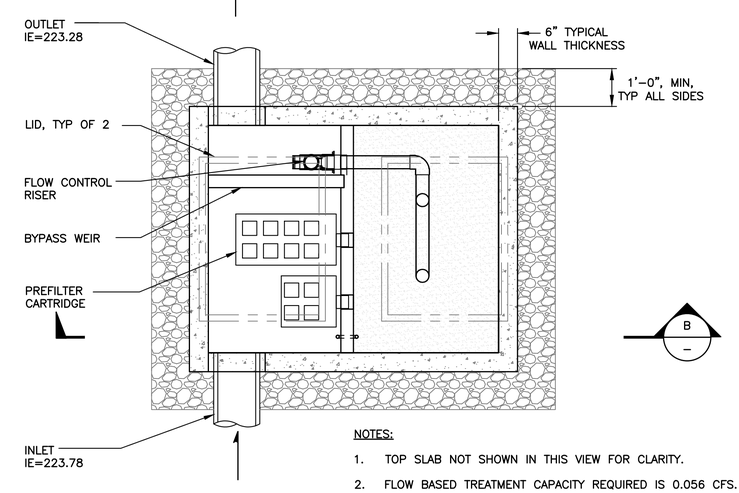

NOTES:

1. TOP SLAB NOT SHOWN IN THIS VIEW FOR CLARITY.
2. FLOW BASED TREATMENT CAPACITY REQUIRED IS 0.056 CFS.
3. PEAK BYPASS REQUIRED IS 0.882 CFS.
4. SURFACE LOAD REQUIRED IS LOAD LEVEL 5.
5. ENHANCED TREATMENT VAULT SHALL BE MODULAR SUBSURFACE FLOW WETLAND SYSTEMS AS MANUFACTURED BY BIOCLEAN, OR EQUAL.

2 / – **ENHANCED TREATMENT VAULT PLAN**
SCALE: 1/2"=1'-0"

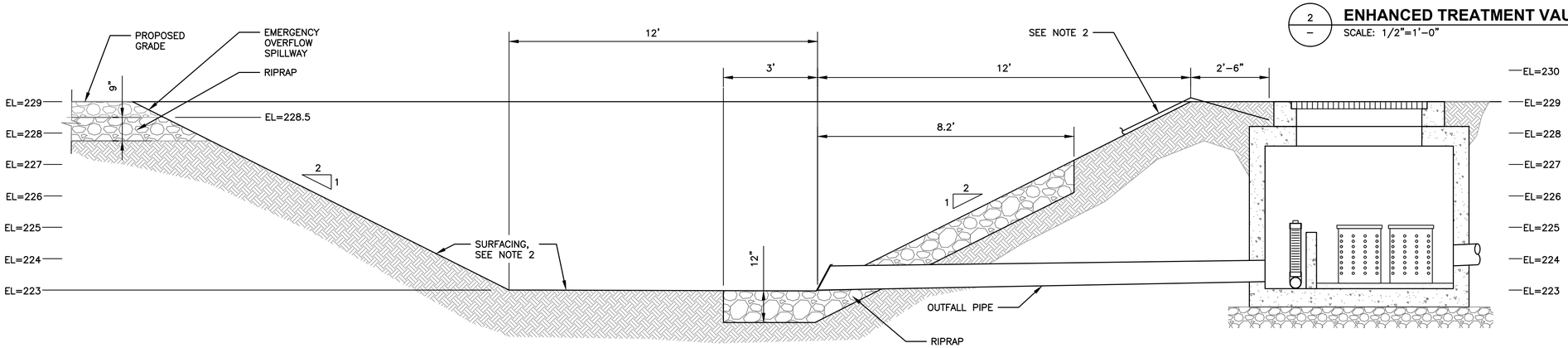

A / – **SECTION**
SCALE: 1/2"=1'-0"

0 1" 2"
TWO INCHES AT FULL SCALE. IF NOT, SCALE ACCORDINGLY

Gray & Osborne, Inc.
CONSULTING ENGINEERS
1130 RAINIER AVENUE SOUTH, SUITE 300
SEATTLE, WASHINGTON 98144

DATE: NOV 2022	
DRAWN: PGM	
CHECKED: KPS	
APPROVED: RLP	

No.	REVISION	DATE	APPD

CITY OF LACEY
THURSTON COUNTY WASHINGTON
BEACHCREST WELLFIELD pH IMPROVEMENTS
STORMWATER PLAN, SECTION, AND DETAILS

SHEET: G-20
SHEET: 20 of 81
JOB NO.: 19520
DWG:G_PRO_SITE_P

L:\LACEY\19520 pH Predesign and S17 Facilities Design\PLANSET\G-Sheets\G_PRO_SITE_P.dwg, 11/21/2022 10:05 AM, PHILIP MARSHALL

PIPING SYMBOLS

DOUBLE LINE	SINGLE LINE	
		EXISTING PIPE
		NEW PIPE
		WELDED
		FLANGED COUPLING ADAPTER
		FLEXIBLE COUPLING
		ADAPTOR FLANGE
		RUBBER EXPANSION JOINT
		BLIND FLANGE
		FLANGED
		FLANGED CHECK VALVE
		FLANGED GATE VALVE
		FLANGED PLUG VALVE
		FLANGED BUTTERFLY VALVE
		FLANGED CONCENTRIC REDUCER
		FLANGED ECCENTRIC REDUCER
		FLANGED ELBOW, 45°
		FLANGED ELBOW, 90°
		FLANGED ELBOW UP
		FLANGED ELBOW DOWN
		FLANGED TEE
		FLANGED TEE UP
		FLANGED TEE DOWN
		FLANGED CROSS
		FLANGED WYE
		DIAPHRAGM VALVE
		SCREWED JOINT
		GROOVED COUPLING

DOUBLE LINE	SINGLE LINE	
		UNION
		BELL UP
		FLEXIBLE HOSE OR TUBING
		BALL VALVE
M	M	VALVE WITH MOTOR ACTUATOR
S	S	SOLENOID VALVE
		SOLID SLEEVE
		MECHANICAL JOINT
		MECHANICAL JOINT CHECK VALVE
		MECHANICAL JOINT GATE VALVE
		MECHANICAL JOINT PLUG VALVE
		MECHANICAL JOINT BUTTERFLY VALVE
		MECHANICAL JOINT CONCENTRIC REDUCER
		MECHANICAL JOINT ECCENTRIC REDUCER
		MECHANICAL JOINT ELBOW, 45°
		MECHANICAL JOINT ELBOW, 90°
		MECHANICAL JOINT ELBOW UP
		MECHANICAL JOINT ELBOW DOWN
		MECHANICAL JOINT TEE
		MECHANICAL JOINT TEE UP
		MECHANICAL JOINT TEE DOWN
		MECHANICAL JOINT CROSS
		MECHANICAL JOINT WYE
		EXISTING EQUIPMENT TO BE ABANDONED OR RELOCATED
		EXISTING EQUIPMENT TO BE DEMOLISHED

PROCESS PIPING / EQUIPMENT IDENTIFICATIONS

PROCESS PIPING

LINE SIZE — 24" SC — PROCESS TYPE SEE LIST BELOW

EQUIPMENT

EQUIPMENT TYPE (SEE LIST BELOW) — POL 99 — EQUIPMENT NUMBER (SEQUENTIAL LISTING)

PROCESS PIPING

AER	AERATION SUPPLY
ALP	AIR LOW PRESSURE
CAR	CARRIER
D	DRAIN
E	ELECTRICAL
HV	HYPOCHLORITE VENT
HYP	HYPOCHLORITE SUPPLY
SAM	SAMPLE
V	VENT
VA	VENT, AERATOR
W	WATER

EQUIPMENT

AER	PACKAGE AERATOR
AF	AIR FILTER
AFM	AIR FLOW METER
B	BLOWER
BP	BOOSTER PUMP
BV	BUTTERFLY VALVE
CA	CHLORINE ANALYZER
CV	CHECK VALVE
FM	FLOW METER
FS	FLOW SWITCH
HCV	HYPOCHLORITE CONTROL VALVE
HST	HYPOCHLORITE STORAGE TANK
LS	LEVEL SWITCH/SENSOR
MP	METERING PUMP
PG	PRESSURE GAUGE
PHT	PH ANALYZER
PT	PRESSURE TRANSMITTER
PV	PLUG VALVE
SLT	SUBMERSIBLE LEVEL TRANSMITTER
ULS	ULTRASONIC LEVEL SENSOR
WP	WELL PUMP

NOTES:

1. FOR PIPE SCHEDULE SEE SPECIFICATION SECTION 15050.
2. FOR ADDITIONAL ABBREVIATIONS AND SYMBOLS SEE CORRESPONDING GENERAL AND ELECTRICAL SHEETS.
3. PIPING SUPPORTS SHALL BE PROVIDED AS SPECIFIED HEREIN AND IN SPECIFICATION SECTION 15066.

0 1" 2"
TWO INCHES AT FULL SCALE. IF NOT, SCALE ACCORDINGLY

Gray & Osborne, Inc.
CONSULTING ENGINEERS
1130 RAINIER AVENUE SOUTH, SUITE 300
SEATTLE, WASHINGTON 98144

DATE: SEPT 2022	
DRAWN:	PGM
CHECKED:	KPS
APPROVED:	RLP

No.	REVISION	DATE	APPD

NEIL PHILLIP STEWART — STATE OF WASHINGTON — 22576 — REGISTERED PROFESSIONAL ENGINEER

RUSSELL L. PORTER — STATE OF WASHINGTON — 37388 — REGISTERED PROFESSIONAL ENGINEER

CITY OF LACEY
THURSTON COUNTY WASHINGTON
BEACHCREST WELLFIELD pH IMPROVEMENTS
GENERAL SYMBOLS AND SYMBOL LEGEND

SHEET: M-1
SHEET: 21 of 81
JOB NO.: 19520
DWG:M_GEN_SYM

L:\LACEY\19520 pH Predesign and S17 Facilities Design\PLANSET\M-Sheets\M_GEN_SYM.dwg, 9/21/2022 1:29 PM, PHILIP MARSHALL

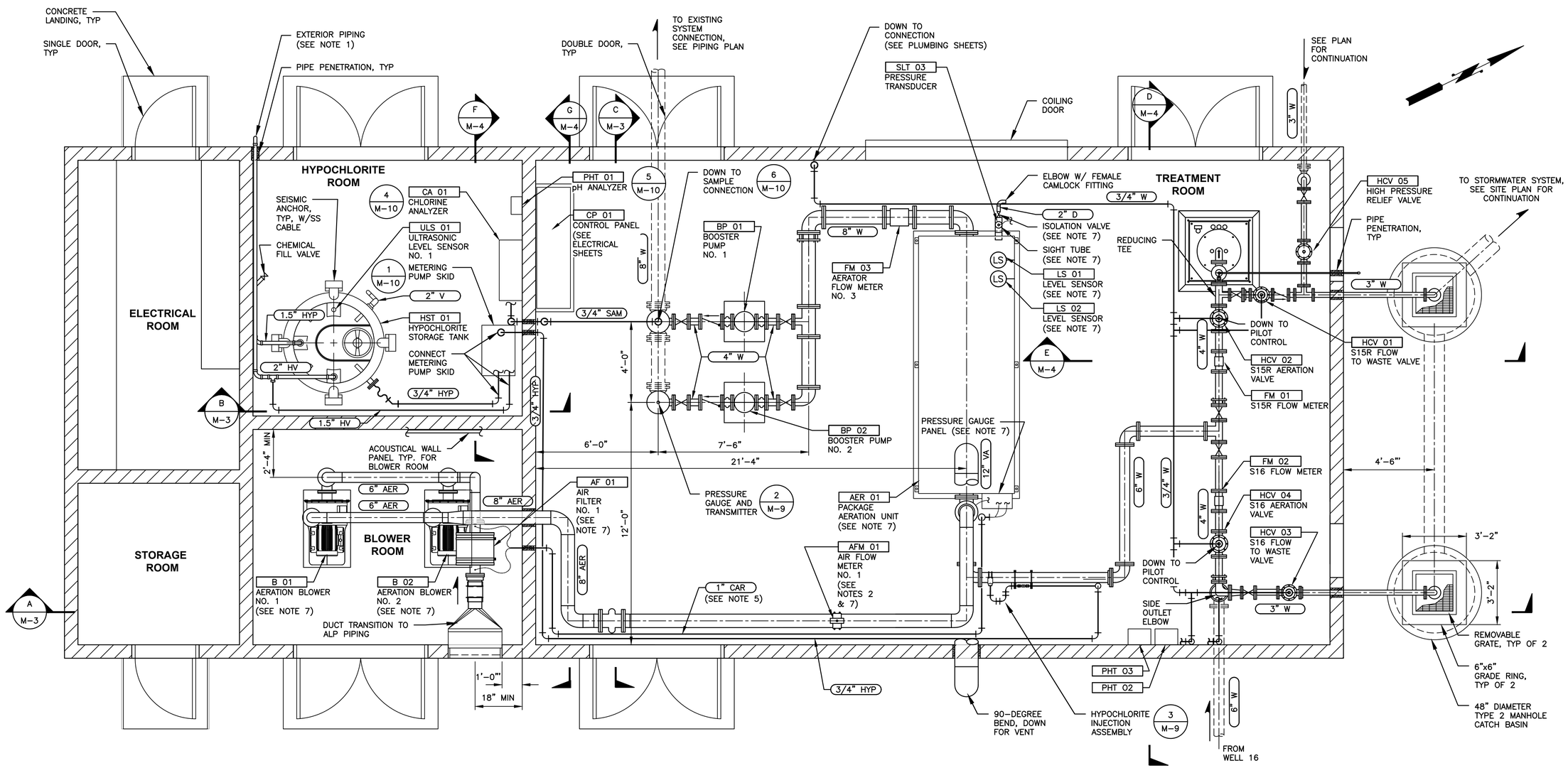

WELL S15R BUILDING

SCALE: 3/8"=1'-0"

NOTES:

1. SEE TYPICAL WALL PENETRATION DETAIL. PROVIDE BEND DOWN AND 24-MESH SCREEN. SCREEN SHALL BE TYPE 316SS MATERIALS AND SECURED TO OUTLET WITH 316SS SCREW CLAMP.
2. PROVIDE ROMAC 202NS OR EQUAL WITH 1-INCH TAP FOR INSTALLATION OF AFM 01. CONTRACTOR SHALL PROVIDE 1-INCH PLUG TO OWNER. AIR FLOW METER SHALL BE INSTALLED WITH 20 PIPE DIAMETERS (13.3 FEET) STRAIGHT PIPE UPSTREAM OF THE METER.
3. PIPE SUPPORTS NOT SHOWN FOR CLARITY. PROVIDE SUPPORTS AS REQUIRED IN SPECIFICATION SECTION 15066. PIPE SUPPORTS SHALL BE FLOOR OR WALL MOUNTED ONLY.
4. FOR ALL SAMPLE/INJECTION CONNECTIONS, PROVIDE TRANSITION FITTINGS AND MATERIALS AS REQUIRED FOR A COMPLETE AND WORKABLE SYSTEM.
5. FOR ALL CARRIER PIPE, BENDS SHALL BE LONG RADIUS SWEEP FITTINGS

0 1" 2"
TWO INCHES AT FULL SCALE. IF NOT, SCALE ACCORDINGLY

Gray & Osborne, Inc.
CONSULTING ENGINEERS
1130 RAINIER AVENUE SOUTH, SUITE 300
SEATTLE, WASHINGTON 98144

DATE: SEPT 2022	DRAWN: PGM	CHECKED: KPS	APPROVED: RLP

No.	REVISION	DATE	APPD

CITY OF LACEY
THURSTON COUNTY WASHINGTON
BEACHCREST WELLFIELD pH IMPROVEMENTS
S15R BUILDING PLAN

SHEET: M-2
SHEET: 22 of 81
JOB NO.: 19520
DWG:M_MECH_SEC

L:\LACEY\19520 pH Predesign and S17 Facilities Design\PLANSET\M-Sheets\M_MECH_SEC.dwg, 9/21/2022 1:30 PM, PHILIP MARSHALL

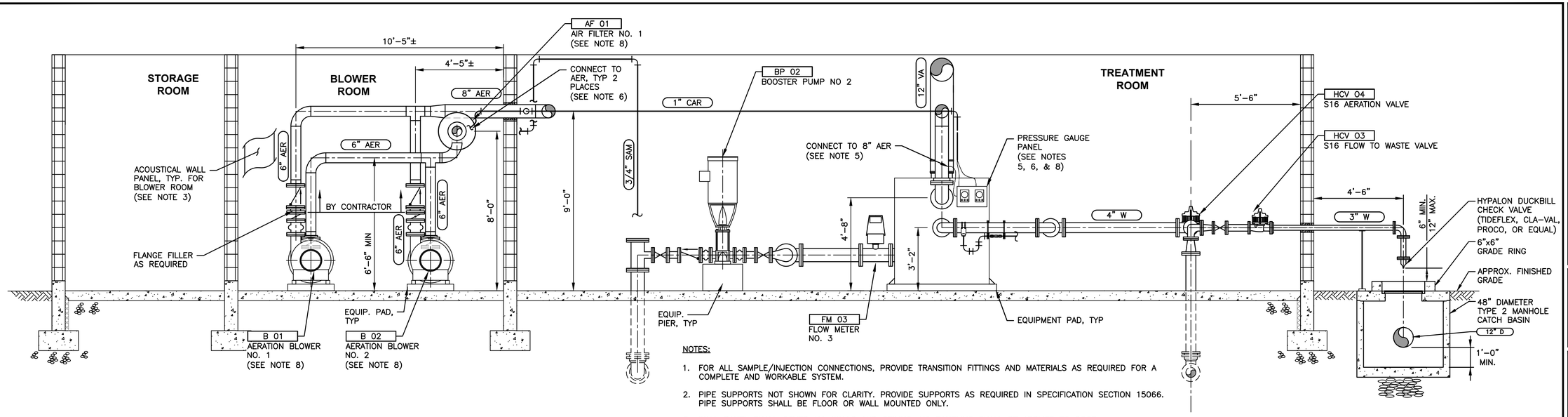

NOTES:

1. FOR ALL SAMPLE/INJECTION CONNECTIONS, PROVIDE TRANSITION FITTINGS AND MATERIALS AS REQUIRED FOR A COMPLETE AND WORKABLE SYSTEM.
2. PIPE SUPPORTS NOT SHOWN FOR CLARITY. PROVIDE SUPPORTS AS REQUIRED IN SPECIFICATION SECTION 15066. PIPE SUPPORTS SHALL BE FLOOR OR WALL MOUNTED ONLY.
3. WALL PANEL SHALL COVER ALL WALLS AND CEILING. NO PANELING SHALL BE APPLIED TO DOOR.
4. COORDINATE FINAL HEIGHT WITH OUTLET OF AER 01. DISCHARGE CENTERLINE IS APPROXIMATELY 28 INCHES AFF.
5. TAP AER PIPING AND CONNECT TO 3/8-INCH HD VINYL TUBING. ROUTE TUBING TO PRESSURE GAUGE PANEL AND CONNECT TO BLOWER AIR PRESSURE GAUGE.
6. CONNECT 3/8-INCH HD VINYL TUBING UPSTREAM AND DOWNSTREAM OF AIR FILTER. FURNISH AND INSTALL THD TAPS W/ ISOLATION VALVES, AND BARBED FITTINGS TO CONNECT TO TUBING. ROUTE BOTH TUBES TO PRESSURE GAUGE PANEL THROUGH CAR PIPING AND CONNECT TO DIFFERENTIAL PRESSURE GAUGE. TUBES SHALL BE DIFFERENT COLORS FOR DIFFERENTIATION.
7. ALL AER PIPING CONNECTION DIMENSIONS MUST BE VERIFIED WITH AERATION SYSTEM MANUFACTURER.
8. IT IS ANTICIPATED THAT THIS EQUIPMENT WILL BE PROVIDED BY THE AERATION UNIT MANUFACTURER. CONFIRM EQUIPMENT TO BE PROVIDED WITH EQUIPMENT MANUFACTURER. CONTRACTOR IS RESPONSIBLE TO ENSURE ALL EQUIPMENT IS FURNISHED AND INSTALLED. PLEASE SEE SECTION 11320 FOR ADDITIONAL INFORMATION.

A / M-2 **SECTION**
SCALE: 3/8"=1'-0"

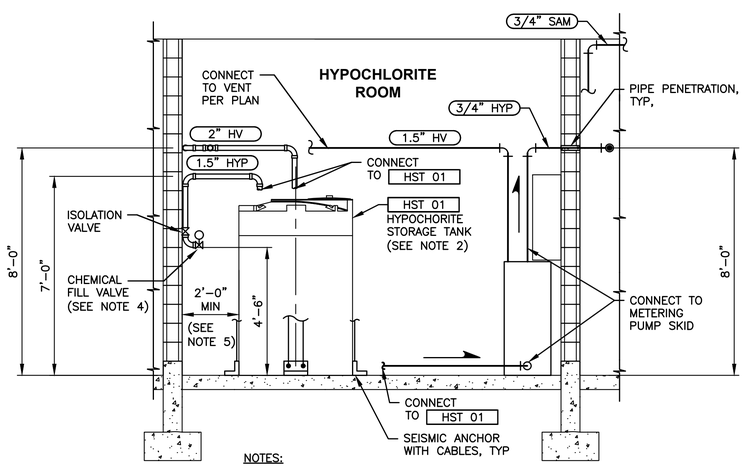

NOTES:

1. PROVIDE TRANSITION FITTINGS AS REQUIRED FOR SYSTEM CONNECTION.
2. SEE SPECIFICATION SECTION 13207 FOR ADDITIONAL INFORMATION.
3. ULS 01 NOT SHOWN FOR CLARITY.
4. FILL VALVE SHALL CONTAIN 1.5-INCH FEMALE CAMLOCK END FITTING, BANJO DM150A. NO OTHER MFRS SHALL BE ACCEPTED. FURNISH AND INSTALL DUTY VALVE, AND PROVIDE ONE SPARE VALVE TO OWNER.
5. PROVIDE 2-FOOT MIN CLEARANCE FROM ALL WALLS.

B / M-2 **SECTION**
SCALE: 3/8"=1'-0"

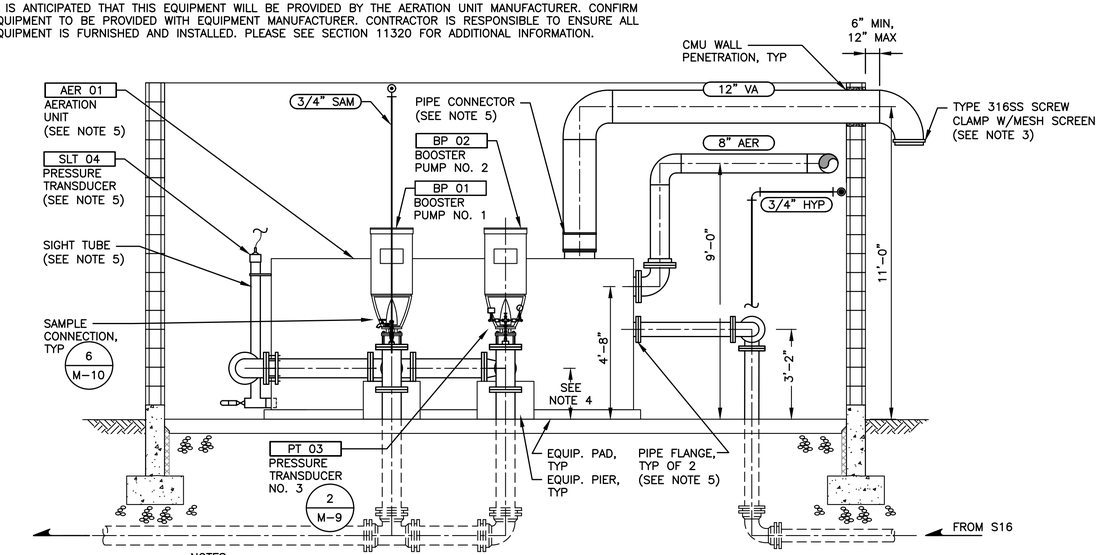

NOTES:

1. PROVIDE TRANSITION FITTINGS AS REQUIRED FOR SYSTEM CONNECTION.
2. PIPE SUPPORTS NOT SHOWN FOR CLARITY. PROVIDE PIPE SUPPORTS PER SPECIFICATION SECTION 15066.
3. MESH SCREEN MUST HAVE AT LEAST 65% OPEN AREA.
4. COORDINATE FINAL HEIGHT WITH OUTLET OF AER 01. DISCHARGE CENTERLINE IS APPROXIMATELY 28 INCHES AFF.
5. IT IS ANTICIPATED THAT THIS EQUIPMENT WILL BE PROVIDED BY THE AERATION UNIT MANUFACTURER. CONFIRM EQUIPMENT TO BE PROVIDED WITH EQUIPMENT MANUFACTURER. CONTRACTOR IS RESPONSIBLE TO ENSURE ALL EQUIPMENT IS FURNISHED AND INSTALLED. PLEASE SEE SECTION 11320 FOR ADDITIONAL INFORMATION.

C / M-2 **SECTION**
SCALE: 3/8"=1'-0"

0 1" 2"
TWO INCHES AT FULL SCALE. IF NOT, SCALE ACCORDINGLY

Gray & Osborne, Inc.
CONSULTING ENGINEERS
1130 RAINIER AVENUE SOUTH, SUITE 300
SEATTLE, WASHINGTON 98144

DATE: SEPT 2022	DRAWN: PGM
CHECKED: KPS	APPROVED: RLP

No.	REVISION	DATE	APPD

NEIL PHILLIP STEWART, STATE OF WASHINGTON, 46429, REGISTERED PROFESSIONAL ENGINEER, 9-21-22

RUSSELL T. PORTER, STATE OF WASHINGTON, 22966, REGISTERED PROFESSIONAL ENGINEER

CITY OF LACEY
THURSTON COUNTY WASHINGTON
BEACHCREST WELLFIELD pH IMPROVEMENTS
S15R BUILDING SECTIONS AND DETAILS

SHEET: M-3
SHEET: 23 of 81
JOB NO.: 19520
DWG:M_MECH_SEC

L:\LACEY\19520 pH Predesign and S17 Facilities Design\PLANSET\M-Sheets\M_MECH_SEC.dwg, 9/21/2022 1:30 PM, PHILIP MARSHALL

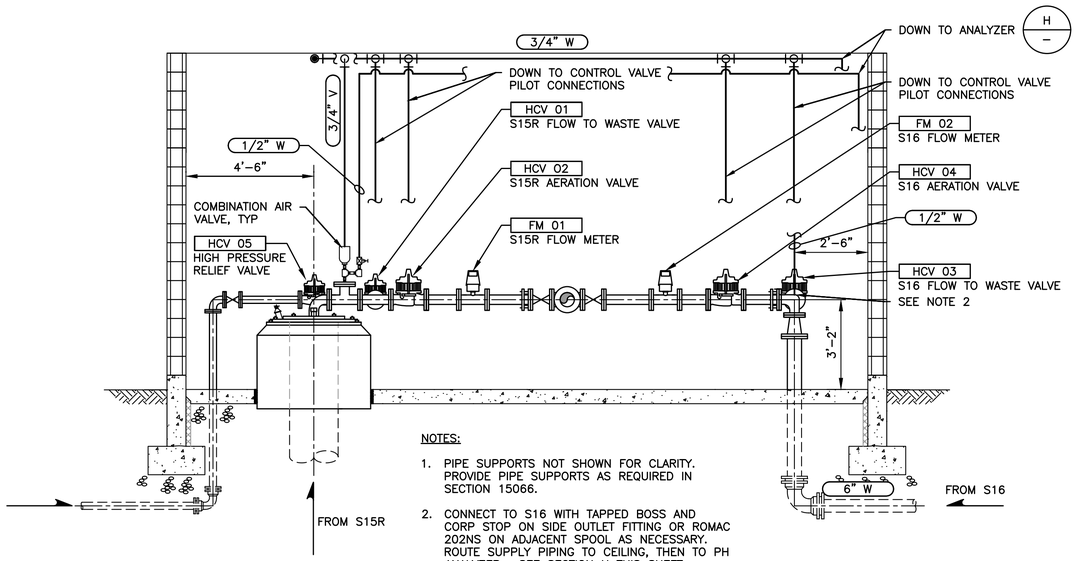

NOTES:

1. PIPE SUPPORTS NOT SHOWN FOR CLARITY. PROVIDE PIPE SUPPORTS AS REQUIRED IN SECTION 15066.
2. CONNECT TO S16 WITH TAPPED BOSS AND CORP STOP ON SIDE OUTLET FITTING OR ROMAC 202NS ON ADJACENT SPOOL AS NECESSARY. ROUTE SUPPLY PIPING TO CEILING, THEN TO PH ANALYZER. SEE SECTION H THIS SHEET.

D / M-2 **SECTION**
SCALE: 3/8"=1'-0"

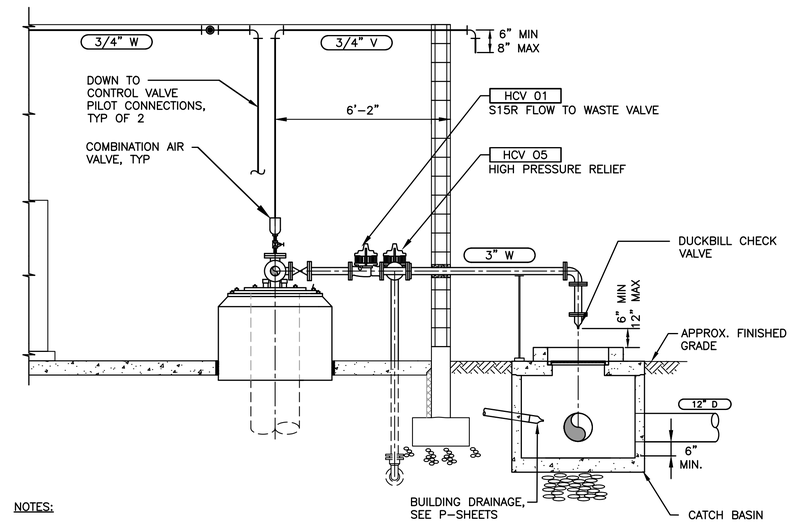

NOTES:

1. PIPE SUPPORTS NOT SHOWN FOR CLARITY. PROVIDE PIPE SUPPORTS AS REQUIRED IN SECTION 15066.

E / M-2 **SECTION**
SCALE: 3/8"=1'-0"

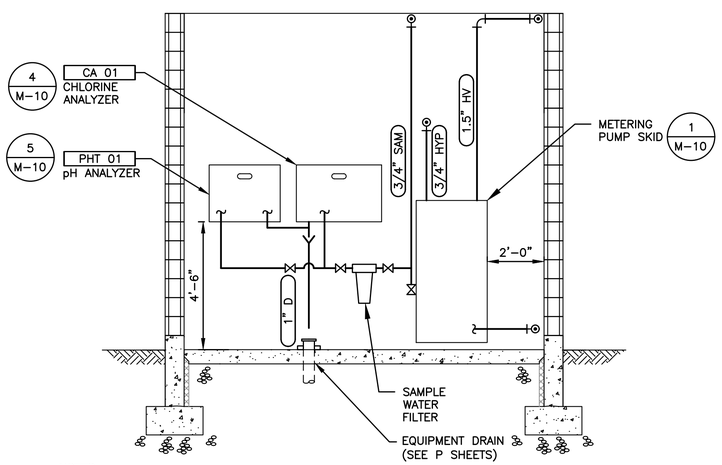

NOTES:

1. CONTRACTOR SHALL FURNISH AND INSTALL TRANSITION FITTINGS AS REQUIRED AND SHALL FURNISH AND CONNECT SAMPLE SUPPLY PIPING TO ANALYZERS PER MANUFACTURERS RECOMMENDATIONS FOR A COMPLETE AND WORKABLE SYSTEM.
2. SEE P-SHEETS FOR DRAIN PIPING CONNECTION AND ADDITIONAL INFORMATION.

F / M-2 **SECTION**
SCALE: 3/8"=1'-0"

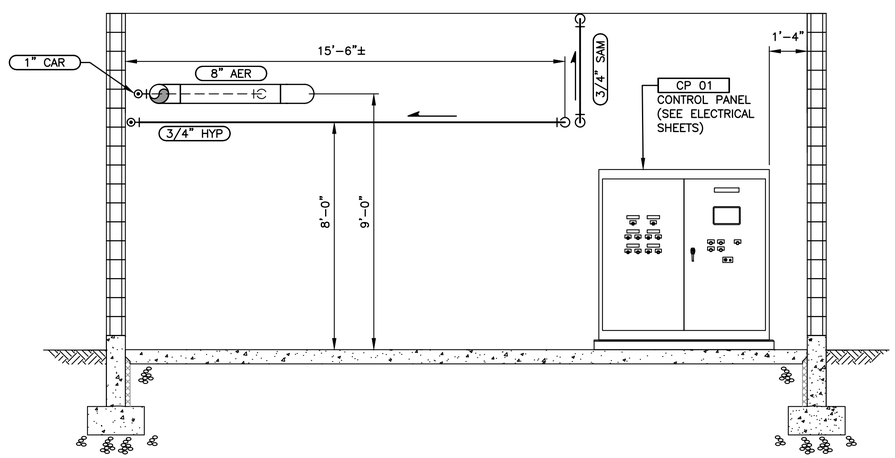

NOTES:

1. PIPE SUPPORTS NOT SHOWN FOR CLARITY. PROVIDE PIPE SUPPORTS AS REQUIRED IN SECTION 15066. PIPE MAY NOT BE SUPPORTED FROM CEILING. SEE STRUCTURAL SHEETS
2. CONTRACTOR SHALL FURNISH AND INSTALL TRANSITION FITTINGS AS REQUIRED AND SHALL FURNISH AND CONNECT SAMPLE SUPPLY PIPING TO ANALYZERS PER MANUFACTURERS RECOMMENDATIONS FOR A COMPLETE AND WORKABLE SYSTEM.
3. SEE P-SHEETS FOR DRAIN PIPING CONNECTION AND ADDITIONAL INFORMATION.

G / M-2 **SECTION**
SCALE: 3/8"=1'-0"

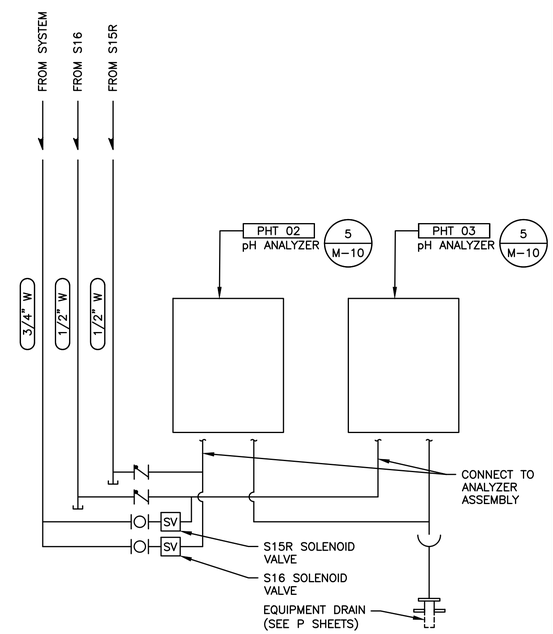

H / M-2 **SECTION**
NOT TO SCALE

0 1" 2"
TWO INCHES AT FULL SCALE. IF NOT, SCALE ACCORDINGLY

Gray & Osborne, Inc.
CONSULTING ENGINEERS
1130 RAINIER AVENUE SOUTH, SUITE 300
SEATTLE, WASHINGTON 98144

DATE: SEPT 2022
DRAWN: PGM
CHECKED: KPS
APPROVED: RLP

No.	REVISION	DATE	APPD

PHILLIP STEWART STATE OF WASHINGTON 23025 REGISTERED PROFESSIONAL ENGINEER 6/23/22

RUSSELL T. PORTER STATE OF WASHINGTON 37963 REGISTERED PROFESSIONAL ENGINEER

CITY OF LACEY
THURSTON COUNTY WASHINGTON
BEACHCREST WELLFIELD pH IMPROVEMENTS
S15R BUILDING SECTIONS AND DETAILS

SHEET: **M-4**
SHEET: **24 of 81**
JOB NO.: 19520
DWG:M_MECH_SEC

L:\LACEY\19520 pH Predesign and S17 Facilities Design\PLANSET\M-Sheets\M_MECH_SEC.dwg, 9/21/2022 1:31 PM, PHILIP MARSHALL

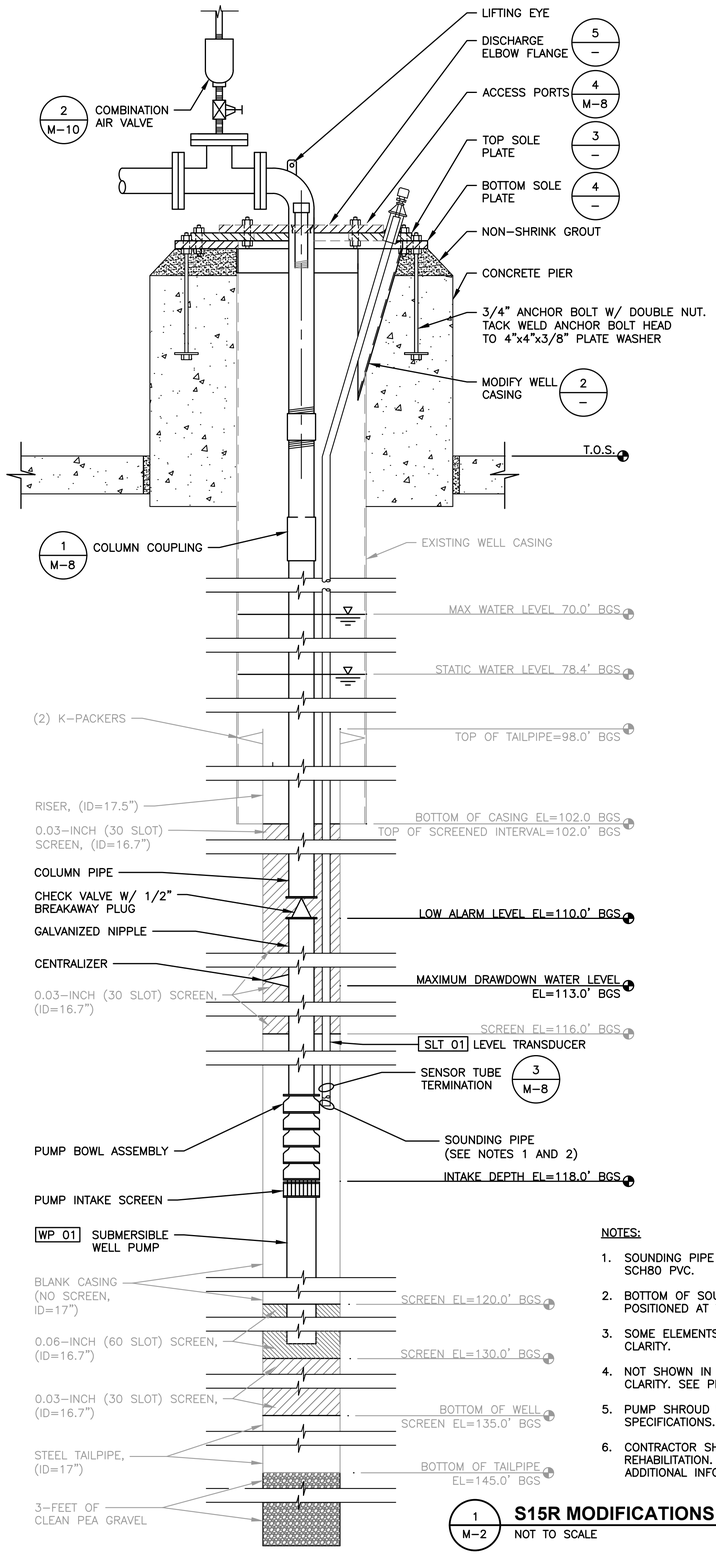

NOTES:

1. SOUNDING PIPE MATERIALS SHALL BE SCH80 PVC.
2. BOTTOM OF SOUNDING PIPE SHALL BE POSITIONED AT THE TOP OF THE PUMP.
3. SOME ELEMENTS MAY BE ROTATED FOR CLARITY.
4. NOT SHOWN IN TRUE POSITION FOR CLARITY. SEE PLAN FOR ORIENTATION.
5. PUMP SHROUD NOT SHOWN, SEE SPECIFICATIONS.
6. CONTRACTOR SHALL ALSO PROVIDE WELL REHABILITATION. SEE SPECIFICATIONS FOR ADDITIONAL INFORMATION.

1 M-2 **S15R MODIFICATIONS**
NOT TO SCALE

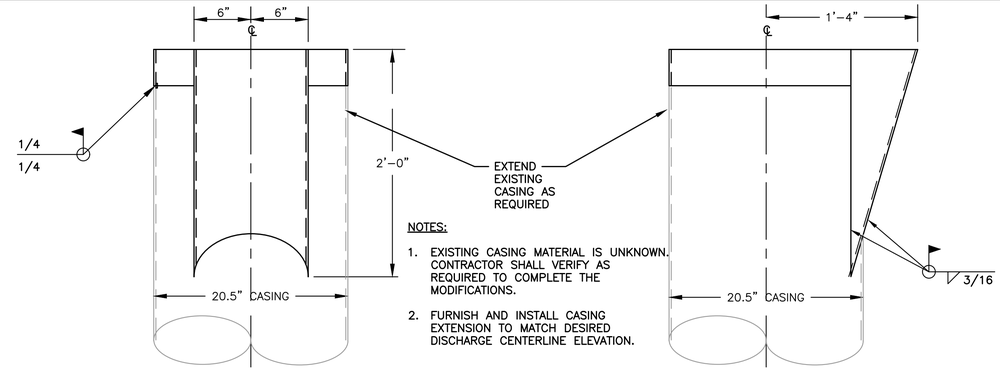

NOTES:

1. EXISTING CASING MATERIAL IS UNKNOWN. CONTRACTOR SHALL VERIFY AS REQUIRED TO COMPLETE THE MODIFICATIONS.
2. FURNISH AND INSTALL CASING EXTENSION TO MATCH DESIRED DISCHARGE CENTERLINE ELEVATION.

2 – **S15R WELL CASING MODIFICATION DETAIL**
SCALE: 1-1/2" = 1'-0"

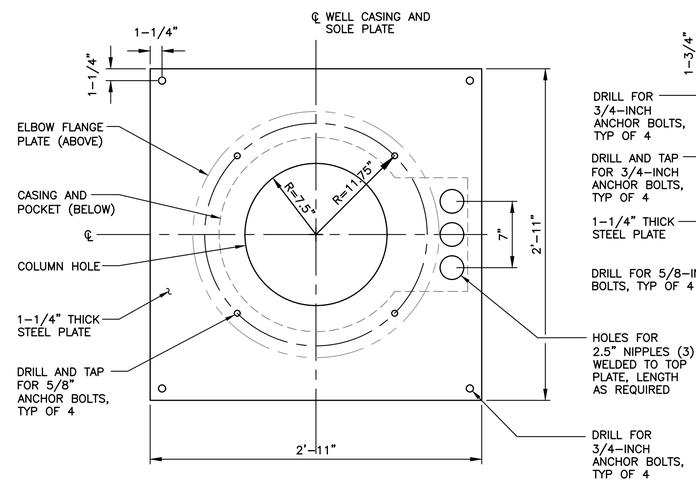

3 – **S15R TOP SOLE PLATE**
SCALE: 1-1/2" = 1'-0"

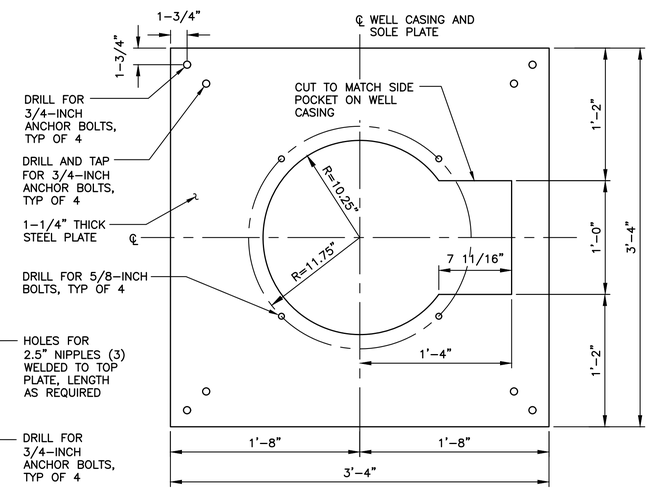

4 – **S15R BOTTOM SOLE PLATE**
SCALE: 1-1/2" = 1'-0"

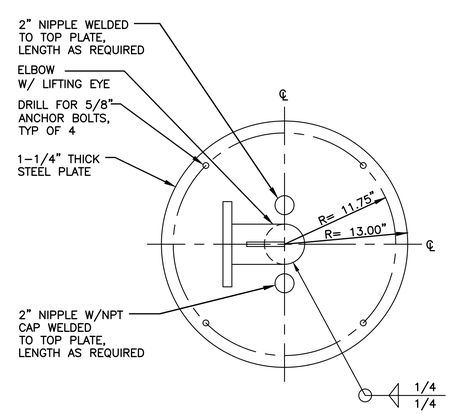

5 – **S15R DISCHARGE ELBOW FLANGE PLATE**
SCALE: 1-1/2" = 1'-0"

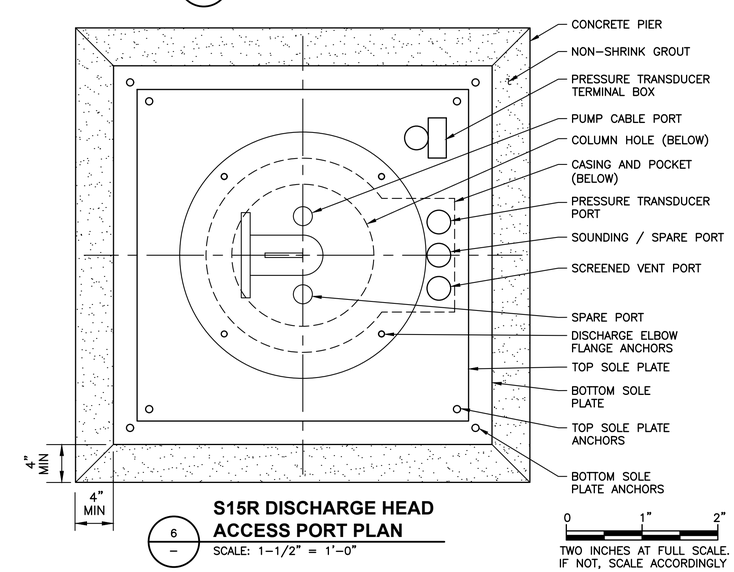

6 – **S15R DISCHARGE HEAD ACCESS PORT PLAN**
SCALE: 1-1/2" = 1'-0"

Gray & Osborne, Inc.
CONSULTING ENGINEERS
1130 RAINIER AVENUE SOUTH, SUITE 300
SEATTLE, WASHINGTON 98144

DATE: SEPT 2022	
DRAWN:	PGM
CHECKED:	KPS
APPROVED:	RLP

No.	REVISION	DATE	APPD

CITY OF LACEY
THURSTON COUNTY WASHINGTON
BEACHCREST WELLFIELD pH IMPROVEMENTS
S15R MODIFICATIONS AND DETAILS

SHEET: M-5
SHEET: 25 of 81
JOB NO.: 19520
DWG:M_WELL_DETS

L:\LACEY\19520 pH Predesign and S17 Facilities Design\PLANSET\M-Sheets\M_WELL_DETS.dwg, 9/21/2022 1:31 PM, PHILIP MARSHALL

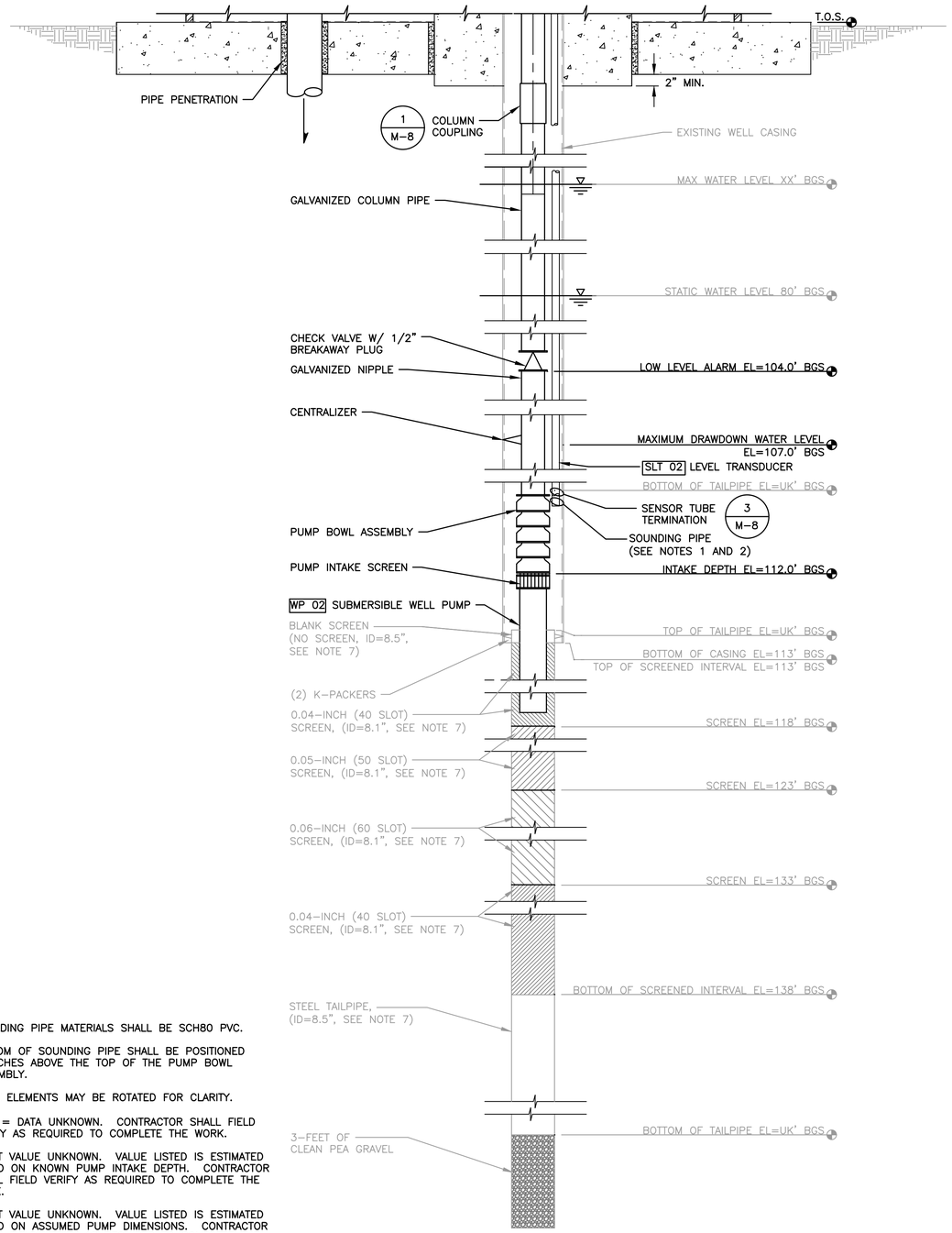

S16 MODIFICATIONS

SCALE: 1"=1'-0"

NOTES:

1. SOUNDING PIPE MATERIALS SHALL BE SCH80 PVC.
2. BOTTOM OF SOUNDING PIPE SHALL BE POSITIONED 2-INCHES ABOVE THE TOP OF THE PUMP BOWL ASSEMBLY.
3. SOME ELEMENTS MAY BE ROTATED FOR CLARITY.
4. "UK" = DATA UNKNOWN. CONTRACTOR SHALL FIELD VERIFY AS REQUIRED TO COMPLETE THE WORK.
5. EXACT VALUE UNKNOWN. VALUE LISTED IS ESTIMATED BASED ON KNOWN PUMP INTAKE DEPTH. CONTRACTOR SHALL FIELD VERIFY AS REQUIRED TO COMPLETE THE WORK.
6. EXACT VALUE UNKNOWN. VALUE LISTED IS ESTIMATED BASED ON ASSUMED PUMP DIMENSIONS. CONTRACTOR SHALL FIELD VERIFY AS REQUIRED TO COMPLETE THE WORK.
7. VALUE LISTED IS ESTIMATED. CONTRACTOR SHALL CONFIRM AS REQUIRED TO COMPLETE THE WORK.

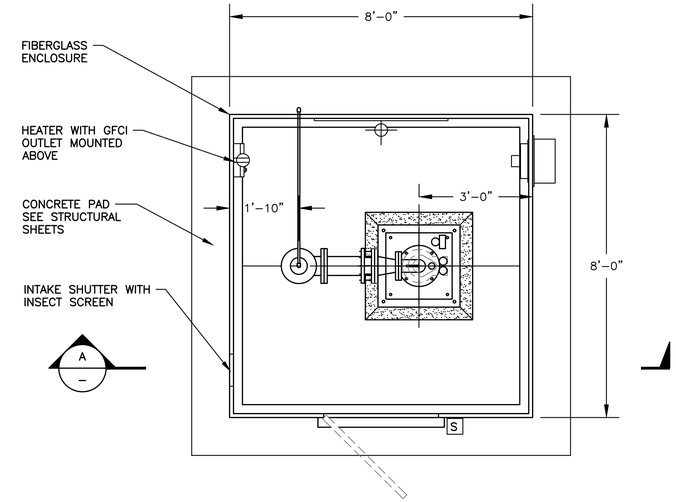

NOTES:

1. SEE SPECIFICATIONS FOR ADDITIONAL INFORMATION ON THE ENCLOSURE. INSTALL PER MANUFACTURERS RECOMMENDATIONS.
2. SEE SITE PLAN FOR AREA SURFACING.

WELL PLAN

SCALE: 1/2"=1'-0"

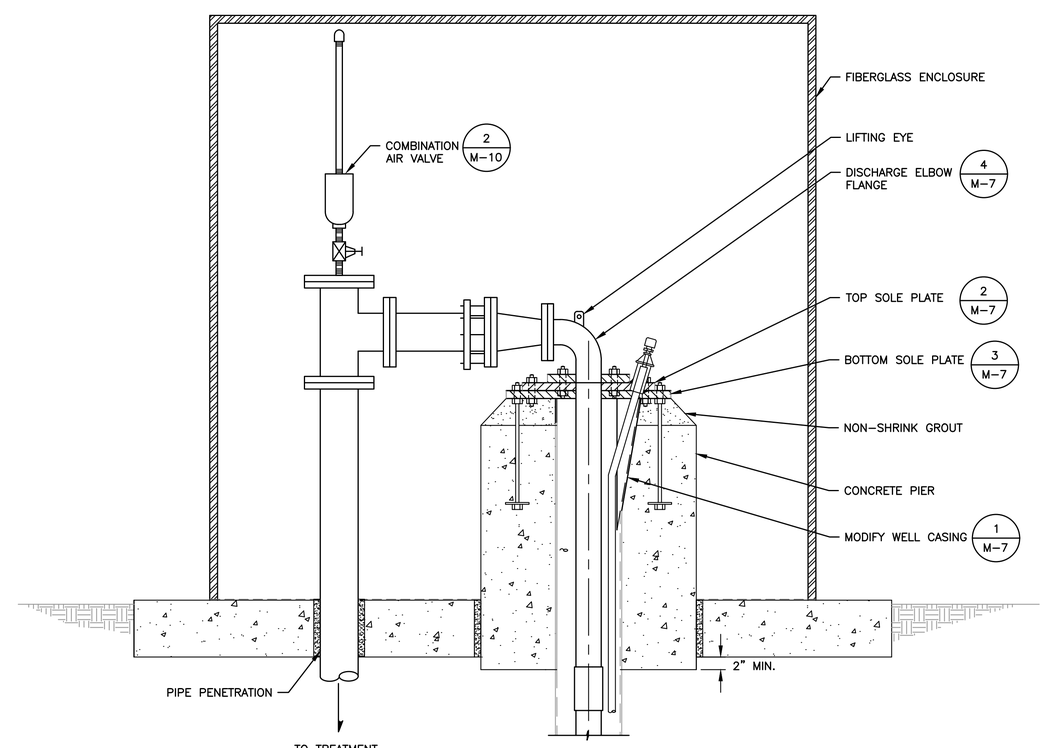

A 1 **SECTION**

SCALE: 1"=1'-0"

0 1" 2"

TWO INCHES AT FULL SCALE. IF NOT, SCALE ACCORDINGLY

Gray & Osborne, Inc.
CONSULTING ENGINEERS
1130 RAINIER AVENUE SOUTH, SUITE 300
SEATTLE, WASHINGTON 98144

DATE: SEPT 2022
DRAWN: PGM
CHECKED: KPS
APPROVED: RLP

No.	REVISION	DATE	APPD

NEIL PHILLIP STEWART, STATE OF WASHINGTON, 9/21/22, REGISTERED PROFESSIONAL ENGINEER

RUSSELL T. PORTER, STATE OF WASHINGTON, 9/21/22, REGISTERED PROFESSIONAL ENGINEER

CITY OF LACEY
THURSTON COUNTY WASHINGTON
BEACHCREST WELLFIELD pH IMPROVEMENTS
S16 MODIFICATIONS AND DETAILS

SHEET: M-6
SHEET: 26 of 81
JOB NO.: 19520
DWG:M_WELL_DETS

L:\LACEY\19520 pH Predesign and S17 Facilities Design\PLANSET\M-Sheets\M_WELL_DETS.dwg, 9/21/2022 1:31 PM, PHILIP MARSHALL

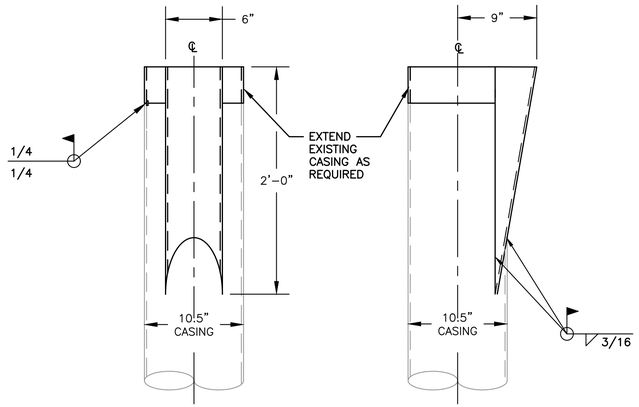

NOTES:

1. EXISTING CASING MATERIAL IS UNKNOWN. CONTRCTOR SHALL VERIFY AS REQUIRED TO COMPLETE THE MODIFICATIONS.
2. FURNISH AND INSTALL CASING EXTENSION IN ORDER TO MATCH DESIRED DISCHARGE PIPE CENTERLINE ELEVATION.

1 / – **S16 WELL CASING MODIFICATION DETAIL**
SCALE: 1-1/2" = 1'-0"

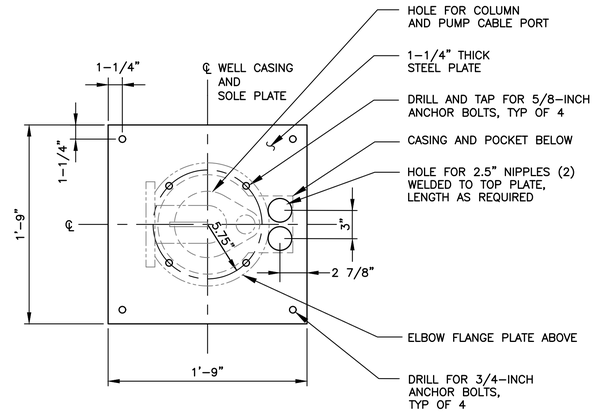

2 / M-7 **S16 TOP SOLE PLATE**
SCALE: 1-1/2" = 1'-0"

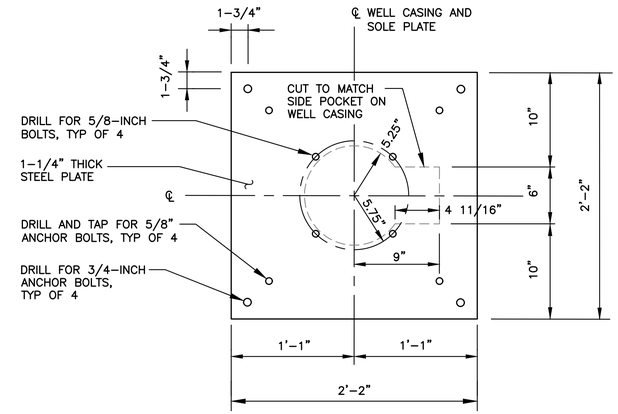

3 / M-7 **S16 BOTTOM SOLE PLATE**
SCALE: 1-1/2" = 1'-0"

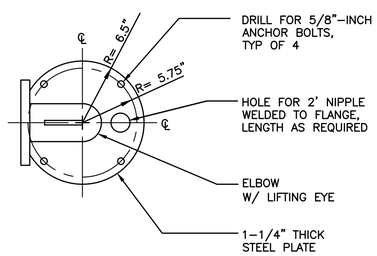

4 / M-7 **S16 DISCHARGE ELBOW FLANGE PLATE**
SCALE: 1-1/2" = 1'-0"

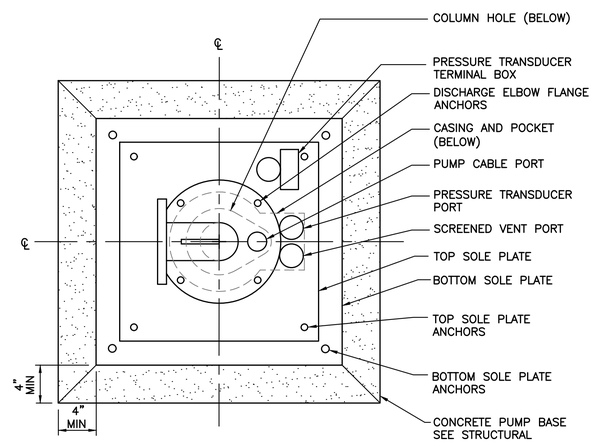

NOTE:

1. VERIFY ALL STEEL DIMENSIONS WITH MANUFACTURERS.
2. DRILL AND TAP. PROVIDE CORRESPONDING HOLES IN BOTTOM SOLE PLATE.
3. DRILL AND TAP. PROVIDE CORRESPONDING HOLES IN TOP SOLE PLATE.
4. SPARE PORT SIMILAR.

1 / G-5 **S16 DISCHARGE HEAD ACCESS PORT PLAN**
SCALE: 1-1/2" = 1'-0"

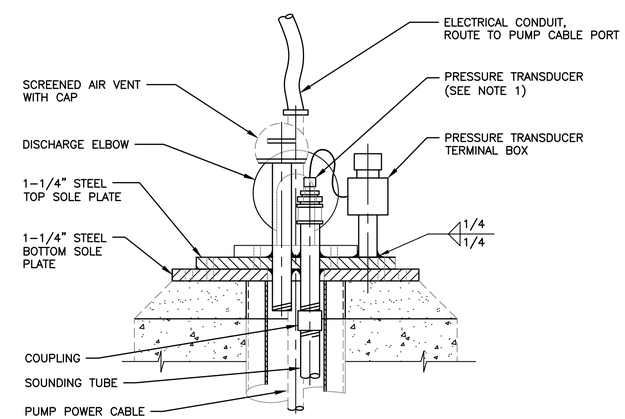

NOTES:

1. CROUSE-HINDS #CGB293 W/GLAND NUT AND NEOPRENE BUSHING, OR EQUAL.
2. SPARE PORT AND PUMP CABLE SUPPORT SIMILAR (NOT SHOWN).
3. WELL VENTS SHALL HAVE MINIMUM 24-MESH SCREEN.

6 / TYP **S16 ACCESS PORT DETAIL**
SCALE: 1-1/2" = 1'-0"

0 1" 2"
TWO INCHES AT FULL SCALE.
IF NOT, SCALE ACCORDINGLY

Gray & Osborne, Inc.
CONSULTING ENGINEERS
1130 RAINIER AVENUE SOUTH, SUITE 300
SEATTLE, WASHINGTON 98144

DATE: SEPT 2022	
DRAWN:	PGM
CHECKED:	KPS
APPROVED:	RLP

No.	REVISION	DATE	APPD

NEIL PHILLIP STEWART, STATE OF WASHINGTON, 52595, REGISTERED PROFESSIONAL ENGINEER, 9/23/22

RUSSELL L. PORTER, STATE OF WASHINGTON, 52595, REGISTERED PROFESSIONAL ENGINEER

CITY OF LACEY
THURSTON COUNTY WASHINGTON
BEACHCREST WELLFIELD pH IMPROVEMENTS
S16 MODIFICATIONS AND DETAILS

SHEET: M-7
SHEET: 27 of 81
JOB NO.: 19520
DWG:M_WELL_DETS

L:\LACEY\19520 pH Predesign and S17 Facilities Design\PLANSET\M-Sheets\M_WELL_DETS.dwg, 9/21/2022 1:32 PM, PHILIP MARSHALL

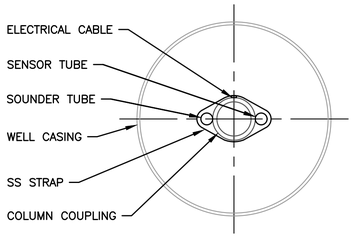

PLAN

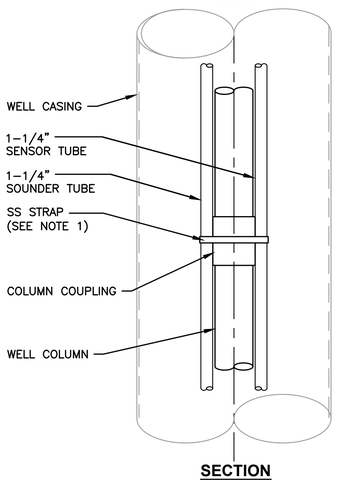

SECTION

NOTES:

1. STRAPS SHALL BE SECURED TO COLUMN COUPLING WITH SS FASTENERS AT 10 FEET O.C., MIN.

1 TYP COLUMN COUPLING DETAIL

SCALE; 1-1/2" = 1'-0"

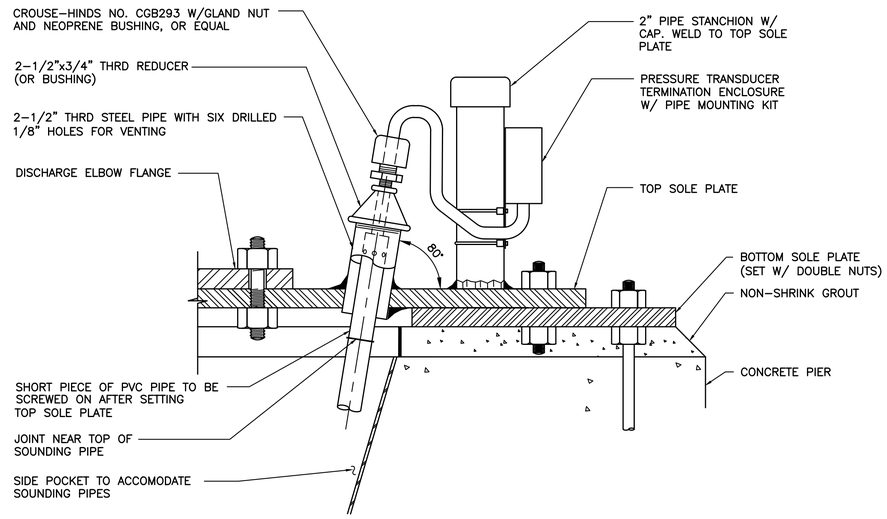

2 – PRESSURE TRANSDUCER PORT DETAIL

SCALE: 3" = 1'-0"

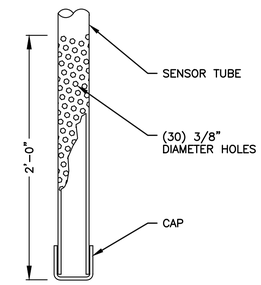

NOTES:

1. SENSOR TUBE MATERIALS SHALL BE SCH80 PVC UNO.
2. CAP SHALL BE WELDED CONNECTION.

3 TYP SENSOR AND SOUNDER TUBE TERMINATION DETAIL

NOT TO SCALE

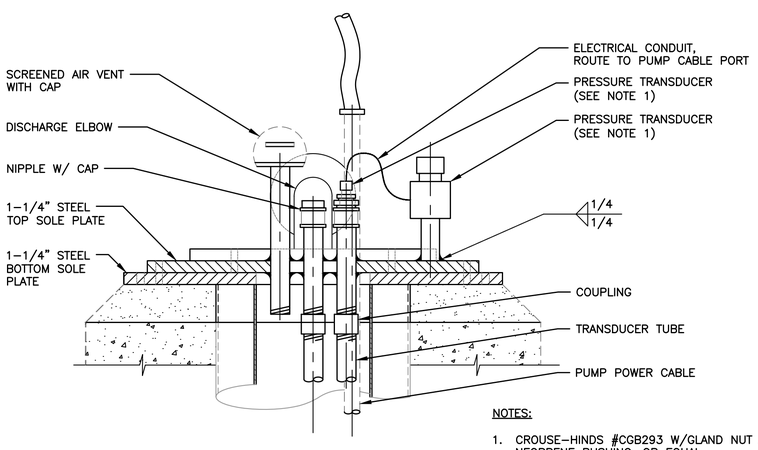

NOTES:

1. CROUSE-HINDS #CGB293 W/GLAND NUT AND NEOPRENE BUSHING, OR EQUAL.
2. SPARE PORT AND PUMP CABLE SUPPORT SIMILAR (NOT SHOWN).
3. WELL VENTS SHALL HAVE MINIMUM 24-MESH SCREEN.

4 TYP S15R ACCESS PORT DETAIL

SCALE: 1-1/2" = 1'-0"

0 1" 2"

TWO INCHES AT FULL SCALE. IF NOT, SCALE ACCORDINGLY

Gray & Osborne, Inc.
CONSULTING ENGINEERS
1130 RAINIER AVENUE SOUTH, SUITE 300
SEATTLE, WASHINGTON 98144

DATE: SEPT 2022	
DRAWN: PGM	
CHECKED: KPS	
APPROVED: RLP	

No.	REVISION	DATE	APPD

KEITH PHILLIP STEWART — STATE OF WASHINGTON — 46232 — REGISTERED PROFESSIONAL ENGINEER

RUSSELL L. PORTER — STATE OF WASHINGTON — 46867 — REGISTERED PROFESSIONAL ENGINEER

CITY OF LACEY

THURSTON COUNTY WASHINGTON

BEACHCREST WELLFIELD pH IMPROVEMENTS

WELL MODIFICATIONS AND DETAILS

SHEET: **M-8**

SHEET: **28 of 81**

JOB NO.: 19520

DWG:M_WELL_DETS

L:\LACEY\19520 pH Predesign and S17 Facilities Design\PLANSET\M-Sheets\M_WELL_DETS.dwg, 9/21/2022 1:32 PM, PHILIP MARSHALL

WALLS

STEEL PIPE

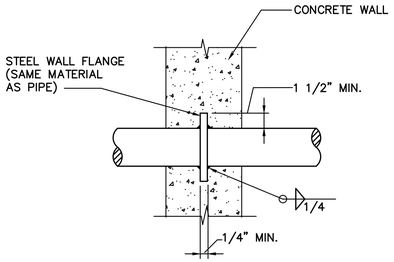

CAST OR DUCTILE IRON PIPE

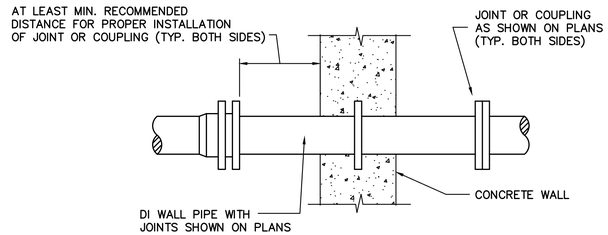

PVC OR FRP PIPE GREATER THAN 3" DIA.

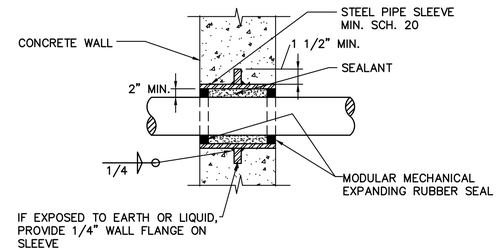

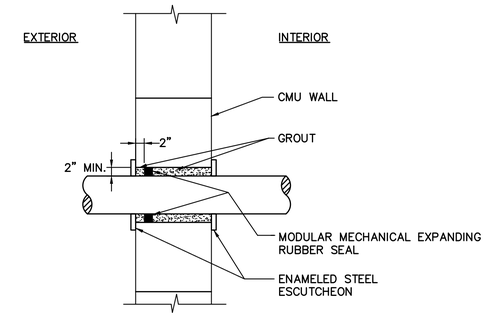

FLOORS

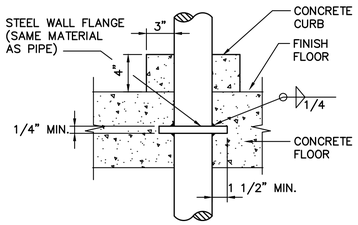

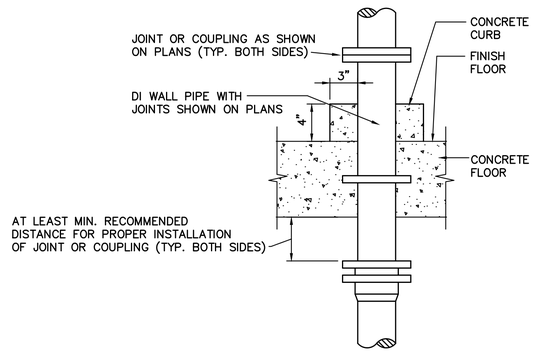

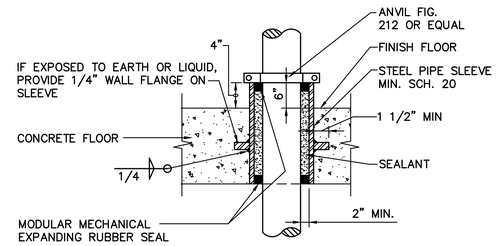

NOTES:

1. FOR EXISTING CONCRETE OR PRECAST CONCRETE, AN OPENING SHALL BE PROVIDED OF ADEQUATE SIZE TO ALLOW FOR INSTALLATION OF PENETRATION SHOWN ON THIS DETAIL. THE OPENING SHALL BE FILLED WITH NON-SHRINK GROUT AFTER PIPE INSTALLATION. IF OPENING IS PROVIDED BY CORE DRILLING, RESULTING SMOOTH CONCRETE SURFACES SHALL BE ROUGHENED BEFORE FILLING WITH GROUT.

2. FOR ADDITIONAL REINFORCEMENT AROUND PIPE PENETRATIONS SEE STRUCTURAL SHEETS

1 / TYP — PIPE PENETRATIONS THROUGH CONCRETE/CMU WALLS AND FLOORS

NOT TO SCALE

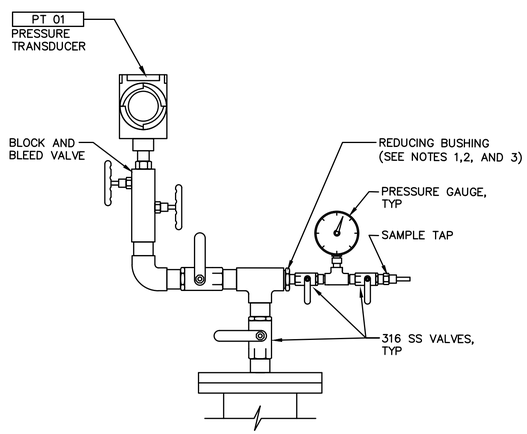

NOTES:

1. PIPING AND FITTINGS SHALL BE 316SS UNO.

2. CONTRACTOR SHALL PROVIDE ALL TRANSITION FITTINGS REQUIRED FOR A COMPLETE AND WORKABLE INSTALLATION.

2 / TYP — PRESSURE GAUGE AND TRANSMITTER DETAIL

NOT TO SCALE

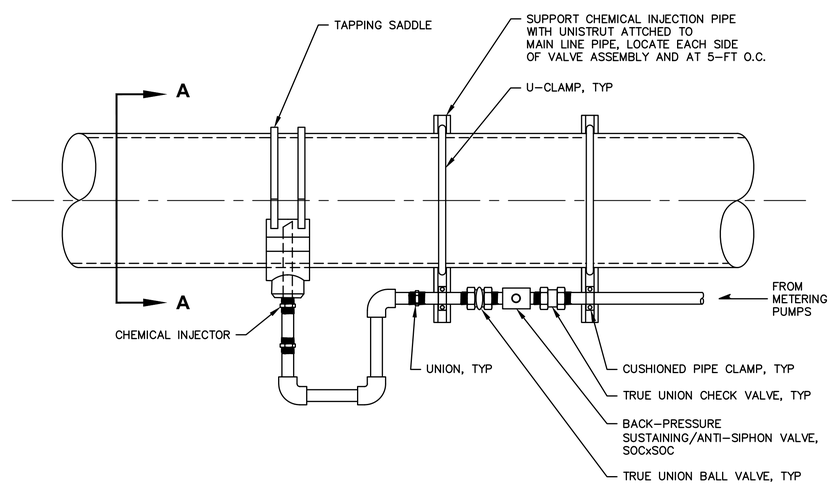

TYPICAL INSTALLATION

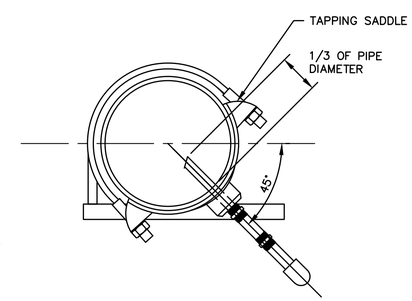

SECTION A-A

3 / TYP — HYPOCHLORITE INJECTION DETAIL

NOT TO SCALE

0 1" 2"

TWO INCHES AT FULL SCALE. IF NOT, SCALE ACCORDINGLY

Gray & Osborne, Inc.
CONSULTING ENGINEERS
1130 RAINIER AVENUE SOUTH, SUITE 300
SEATTLE, WASHINGTON 98144

DATE: SEPT 2022	
DRAWN: PGM	
CHECKED: KPS	
APPROVED: RLP	

No.	REVISION	DATE	APPD

CITY OF LACEY
THURSTON COUNTY WASHINGTON
BEACHCREST WELLFIELD pH IMPROVEMENTS
MECHANICAL DETAILS

SHEET: M-9
SHEET: 29 of 81
JOB NO.: 19520
DWG:M_DET

L:\LACEY\19520 pH Predesign and S17 Facilities Design\PLANSET\M-Sheets\M_DET.dwg, 9/21/2022 1:32 PM, PHILIP MARSHALL

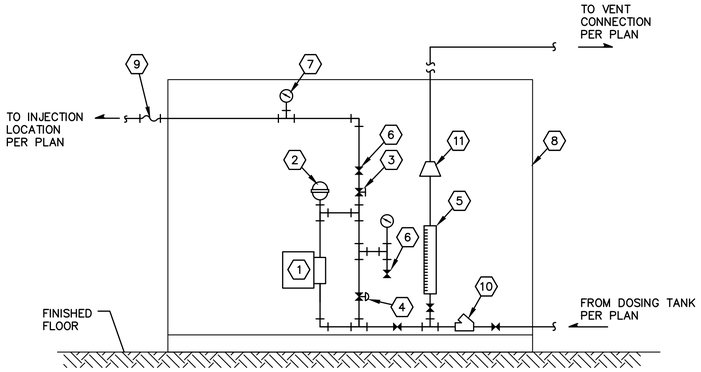

LEGEND:

1. CHEMICAL FEED PUMP
2. PULSATION DAMPENER
3. BACK PRESSURE VALVE
4. PRESSURE RELIEF VALVE
5. CALIBRATION COLUMN W/ VENT PIPING
6. ISOLATION VALVE
7. PRESSURE GAUGE
8. FREE STANDING PVC/HDPE SKID & BACKPLATE
9. FLEXIBLE CONNECTION
10. WYE STRAINER
11. TRANSITION FITTINGS, AS REQUIRED

NOTES:

1. FLEX CONNECTION AT HST 01 NOT SHOWN, SEE PLAN AND SPECIFICATIONS.
2. ALL PIPE AND VALVE MATERIALS SHALL BE SCH80 PVC UNO. CONNECTIONS SHALL BE WELDED UNO.

1 TYP METERING PUMP SKID

NOT TO SCALE

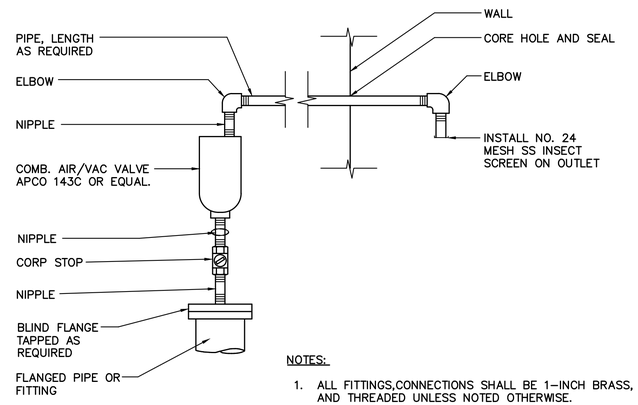

NOTES:

1. ALL FITTINGS,CONNECTIONS SHALL BE 1-INCH BRASS, AND THREADED UNLESS NOTED OTHERWISE.
2. SECURE MESH SCREEN W/ 2x 304SS SCREW CLAMPS.

2 TYP COMBINATION AIR VALVE

NOT TO SCALE

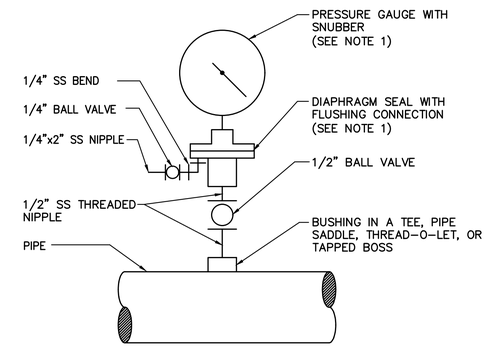

NOTE:

1. PRESSURE GAUGE FOR AIR OR POTABLE WATER SERVICE DOES NOT REQUIRE DIAPHRAGM SEAL. PROVIDE THESE GAUGES WITH SNUBBERS.

3 TYP PRESSURE GAUGE DETAIL

NOT TO SCALE

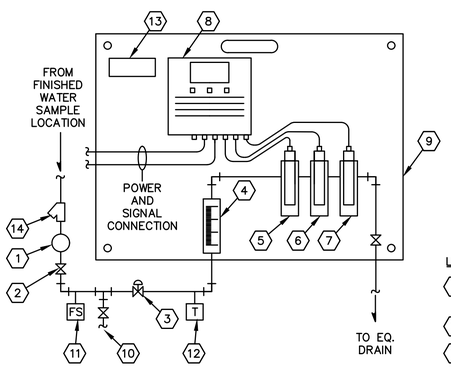

LEGEND:

1. PRESSURE REGULATOR VALVE W/GAUGE
2. ISOLATION VALVE, TYP
3. NEEDLE VALVE
4. FLOW MEASUREMENT MODUL
5. PH SENSOR W/FLOWCELL
6. CHLORINE SENSOR W/FLOWCELL
7. TEMPERATURE SENSOR W/FLOWCELL
8. CONTROLLER
9. HDPE MOUNTING PLATE
10. MANUAL SAMPLE TAP (SEE NOTE 1)
11. FLOW SWITCH FS 01
12. RESISTANCE TEMPERATURE DETECTOR RTD 01
13. ANALYZER NAMEPLATE
14. WYE STRAINER

NOTES:

1. MANUAL SAMPLE TAPS SHALL INCLUDE SMOOTH NOSE HOSE BIB
2. SEE SPECIFICATIONS FOR ADDITIONAL COMPONENT INFORMATION.

4 TYP CHLORINE ANALYZER

NOT TO SCALE

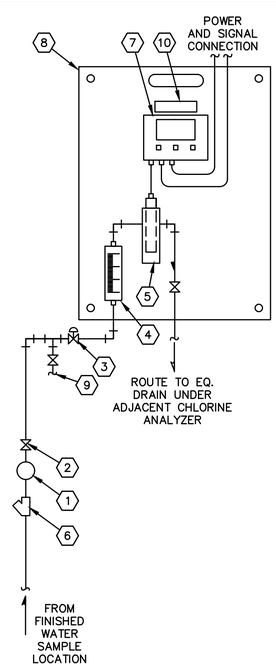

NOTES:

1. MANUAL SAMPLE TAPS SHALL BE INCLUDE SMOOTH HOSE BIB.
2. SEE SPECIFICATIONS FOR ADDITIONAL COMPONENT INFORMATION.

LEGEND:

1. PRESSURE REGULATOR VALVE W/ GAUGE
2. ISOLATION VALVE, TYP.
3. NEEDLE VALVE
4. FLOW MEASUREMENT MODULE
5. pH SENSOR W/FLOWCELL
6. WYE STRAINER
7. CONTROLLER
8. HDPE MOUNTING PLATE
9. MANUAL SAMPLE TAP (SEE NOTE 1)
10. ANALYZER NAMEPLATE

5 TYP pH ANALYZER

NOT TO SCALE

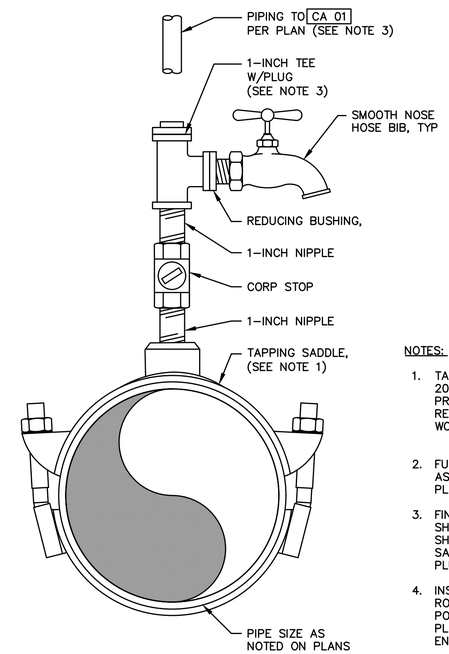

NOTES:

1. TAPPING SADDLE SHALL BE ROMAC 202NS, OR EQUAL WITH 1-INCH TAP. PROVIDE TRANSITION FITTINGS AS REQUIRED FOR A COMPLETE AND WORKABLE INSTALLATION.
2. FURNISH AND INSTALL COMPLETE ASSEMBLIES WHERE INDICATED ON THE PLANS.
3. FINISHED WATER SAMPLE CONNECTION SHALL INCLUDE PIPING TO CA 01 AS SHOWN ON THE PLAN. RAW WATER SAMPLE CONNECTION SHALL INCLUDE PLUG.
4. INSTALLATION FOR PHT 02 MUST BE ROTATED SO THAT SAMPLE TAP IS POINTED BELOW THE HORIZONTAL PLANE. COORDINATE WITH OWNER AND ENGINEER PRIOR TO INSTALLATION.

6 TYP SAMPLE CONNECTION DETAIL

NOT TO SCALE

0 1" 2"

TWO INCHES AT FULL SCALE. IF NOT, SCALE ACCORDINGLY

Gray & Osborne, Inc.
CONSULTING ENGINEERS
1130 RAINIER AVENUE SOUTH, SUITE 300
SEATTLE, WASHINGTON 98144

DATE: SEPT 2022	
DRAWN:	PGM
CHECKED:	KPS
APPROVED:	RLP

No.	REVISION	DATE	APPD

NEIL PHILLIP STEWART, STATE OF WASHINGTON, 9/21/22, REGISTERED PROFESSIONAL ENGINEER

ROBERT L. PORTER, STATE OF WASHINGTON, 9/21/22, REGISTERED PROFESSIONAL ENGINEER

CITY OF LACEY
THURSTON COUNTY WASHINGTON
BEACHCREST WELLFIELD pH IMPROVEMENTS
MECHANICAL DETAILS

SHEET: M-10
SHEET: 30 of 81
JOB NO.: 19520
DWG:M_DET

L:\LACEY\19520 pH Predesign and S17 Facilities Design\PLANSET\M-Sheets\M_DET.dwg, 9/21/2022 1:32 PM, PHILIP MARSHALL

HVAC DESIGN CRITERIA

OA VENTILATION

NONE: S15R WELL BUILDING IS CONSIDERED A NON-OCCUPIED EQUIPMENT ROOM.

DESIGN TEMPERATURES

WINTER AMBIENT TEMP:	17 °F
SUMMER AMBIENT TEMP:	85 °F
INTERIOR HEATING SETPOINT:	50 °F
INTERIOR COOLING SETPOINT:	90 °F

HEATING/COOLING

TREATMENT ROOM:

REQ'D HEATING LOAD:	16.7 MBH
TYPE:	ELECTRIC RESISTANCE
REQ'D CAPACITY:	4.9 KW
REQ'D COOLING LOAD:	9.7 MBH
TYPE:	VENTILATION
REQ'D AIR FLOW:	1,800 CFM @ 5 °F TEMP DELTA

ELECTRICAL ROOM:

REQ'D HEATING LOAD:	4.7 MBH
REQ'D COOLING LOAD:	13.8 MBH
TYPE:	SPLIT SYSTEM (HEAT PUMP/FAN COIL)

BLOWER ROOM:

REQ'D HEATING LOAD:	2.4 MBH
TYPE:	ELECTRICAL RESISTANCE
REQ'D CAPACITY:	0.7 KW
REQ'D COOLING LOAD:	N/A

HYPOCHLORITE ROOM:

SUPPLEMENTARY VENTILATION:	~ 6 ACH; 4 HR PER DAY 200 CFM
REQ'D HEATING LOAD:	9.6 MBH
TYPE:	ELECTRICAL RESISTANCE
REQ'D CAPACITY:	2.8 KW

CONTROL DESCRIPTION:

HEAT PUMP [HP 01] AND WALL MOUNTED FAN COIL [FC 01] PROVIDES HEATING AND COOLING FOR THE ELECTRICAL ROOM AND IS CONTROLLED BY THERMOSTAT [T 01].

EXHAUST FAN [EF 01] PROVIDES SUPPLEMENTARY VENTILATION TO THE HYPOCHLORITE ROOM TO PREVENT THE BUILD UP OF CORROSIVE GASSES AND IS CONTROLLED BY TIMER RELAY [C 01].

SUPPLY FAN [SF 01] PROVIDES COOLING VENTILATION TO THE TREATMENT ROOM AND IS CONTROLLED BY THERMOSTAT [T 02].

UNIT HEATERS [HT 01], [HT 02], [HT 03], AND [HT 04] EACH PROVIDE HEATING TO THE SPACES IN WHICH THEY ARE LOCATED AND ARE EACH CONTROLLED BY INTERNAL THERMOSTATS.

HVAC SYMBOLS

- RECTANGULAR DUCT (DIMENSION SHOWN X DIMENSION HIDDEN)
- TRANSITION, CONCENTRIC, 15° MAX
- TRANSITION, ECCENTRIC, 30° MAX
- TRANSITION, SQUARE TO ROUND
- STANDARD RADIUS ELBOW
- SQUARE THROAT ELBOW W/ TURNING VANES
- 45 DEGREE RECTANGLE-TO-ROUND BRANCH
- 45 DEGREE RECTANGULAR BRANCH
- MANUAL VOLUME DAMPER
- EXHAUST/RETURN/OA DUCT (TOWARD VIEWER)
- EXHAUST/RETURN/OA DUCT (AWAY FROM VIEWER)
- SUPPLY DUCT (TOWARD VIEWER)
- SUPPLY DUCT (AWAY FROM VIEWER)
- FLEXIBLE DUCT CONNECTION (TO AIR HANDLING EQUIPMENT)
- SECTION EXHAUST/RETURN/OA
- SECTION SUPPLY DUCT
- LOUVER
- THERMOSTAT, WALL MOUNTED WALL TYPE VARIES, SEE S-SHEETS FOR WALL TYPE
- ELECTRIC MOTOR
- FLOW DIRECTION, EXHAUST LOUVER OR SUPPLY DIFFUSER/GRILLE
- FLOW DIRECTION, INTAKE LOUVER OR EXHAUST/RETURN GRILLE

HVAC ABBREVIATIONS

A	AMPERE
ACH	AIR CHANGES PER HOUR
AFF	ABOVE FINISHED FLOOR
AFG	ABOVE FINISHED GRADE
AHJ	AUTHORITY HAVING JUSIDICTION
BDD	BACK DRAFT DAMPER
BLDG	BUILDING
BTU	BRITISH THERMAL UNIT
CA	COMPRESSED AIR
CAP	CAPACITY
CD	CEILING DIFFUSER
CFM	CUBIC FEET PER MINUTE
CLG	CEILING
DIA	DIAMETER
DN	DOWN
EA	EXHAUST AIR
ECM	ELECTRONICALLY COMMUTATED MOTOR
EF	EXHAUST FAN
°F	DEGREES FAHRENHEIT
FS	FLOW SWITCH
GPM	GALLONS PER MINUTE
HOA	HAND/OFF/AUTO
MA	MIXED AIR
MBH	1,000 BTU'S/HR
MCA	MINIMUM CIRCUIT AMPS
MFR	MANUFACTURER
MOCP	MAXIMUM OVER CURRENT PROTECTION
NA	NOT APPLICABLE
NC	NORMALLY CLOSED
NG	NATURAL GAS
NO	NORMALLY OPEN
OA	OUTSIDE AIR
POC	POINT OF CONNECTION
RA	RETURN AIR
SA	SUPPLY AIR
SP	STATIC PRESSURE
TEMP	TEMPERATURE
UNO	UNLESS NOTED OTHERWISE
V	VOLTS
VD	VOLUME DAMPER
VRF	VARIABLE REFRIGERANT FLOW
W	WATT
WC	WATER COLUMN
WP	WALL PENETRATION

HVAC GENERAL NOTES

1. MATERIALS, METHODS AND INSTALLATION SHALL COMPLY WITH THE CONTRACT SPECIFICATIONS AND WITH THE PROVISIONS OF THE 2018 INTERNATIONAL MECHANICAL CODE, 2018 INTERNATIONAL BUILDING CODE, 2018 INTERNATIONAL FIRE CODE AS AMENDED BY THE STATE OF WASHINGTON AND THE LOCAL AUTHORITY HAVING JURISDICTION.
2. THESE PLANS ARE SCHEMATIC AND DO NOT SHOW EXACT ROUTING OR EVERY OFFSET, WHICH MAY BE REQUIRED. THE HVAC CONTRACTOR IS TO COORDINATE WITH ALL OTHER TRADES AND IS TO VERIFY ALL CLEARANCES BEFORE COMMENCING WORK.
3. CONTRACTOR SHALL VERIFY THE DIMENSIONS WITH THE EQUIPMENT MANUFACTURER TO PROVIDE DUCT TRANSITIONS TO HVAC VENTILATORS, FANS, LOUVERS, OR SUPPLY/EXHAUST GRILLES TO MATCH THE INLET/OUTLET DIMENSIONS OF THE EQUIPMENT.
4. PROVIDE EARTHQUAKE RESTRAINT FOR HVAC EQUIPMENT IN ACCORDANCE WITH SMACNA RESTRAINT MANUAL AS REQUIRED BY 2018 INTERNATIONAL BUILDING CODE REQUIREMENTS.
5. CONSTRUCTION, SUPPORTS AND INSTALLATION SHALL BE INSTALLED AND COMPLY WITH THE 2018 INTERNATIONAL MECHANICAL CODE (IMC) AND WITH SMACNA HVAC DUCT CONSTRUCTION STANDARDS-METAL AND FLEXIBLE.
6. ALL DUCTWORK IS CLASSIFIED AS LOW PRESSURE.
7. ALL HVAC SYSTEMS SHALL BE BALANCED BY A LICENSED CONTRACTOR IN ACCORDANCE WITH ACCEPTED ENGINEERING STANDARDS AND SPECIFICATION.
8. AN AIR BARRIER TEST SHALL BE PERFORMED IN ACCORDANCE WITH THE WASHINGTON STATE ENERGY CODE AND ASTM E779.
9. LOCATE THERMOSTATS 5 FEET AFF. UNLESS OTHERWISE NOTED.
10. PROVIDE FLEXIBLE DUCT CONNECTIONS ON ALL DUCTWORK CONNECTING TO EQUIPMENT.
11. EQUIPMENT DRAIN PIPING SHALL MAINTAIN A MIN HORIZONTAL SLOPE IN THE DIRECTION OF DISCHARGE OF MIN -1/8 INCH VERTICAL PER 1 FOOT HORIZONTAL.
12. CONTRACTOR SHALL COORDINATE CEILING EQUIPMENT LOCATIONS WITH CEILING PLANS AND ELECTRICAL LIGHTING LAYOUT.
13. EQUIPMENT CONDENSATE DRAINS SHALL BE TRAPPED AS REQUIRED BY THE EQUIPMENT OR APPLIANCE MANUFACTURER.
14. REFRIGERANT PIPING SHALL BE INSTALLED WITH CLOSED CELL ELASTOMERIC INSULATION IN ACCORDANCE WITH SPECIFICATION 15700. INSULATION EXPOSED TO OUTSIDE CONDITIONS SHALL BE ENCLOSED BY A LINE-HIDE LINESET COVER SYSTEM.
15. BUILDING HVAC DOCUMENTS SUCH AS RECORDS, CALCULATIONS, COMPLIANCE FORMS, AND EQUIPMENT MANUALS SHALL BE SUPPLIED TO THE BUILDING OWNER.

HVAC EQUIPMENT & AIR DEVICE IDENTIFICATIONS

EQUIPMENT TYPE (SEE LIST BELOW) — POL XX — EQUIPMENT NUMBER (SEQUENTIAL LISTING)

AIR DEVICE TYPE (SEE LIST BELOW) — S-X / XXX — EQUIPMENT NUMBER (SEQUENTIAL LISTING); FLOWRATE AT AIR DEVICE

EQUIPMENT

C	CONTROLLER
EF	EXHAUST FAN
FC	FAN COIL
HP	HEAT PUMP
HT	HEATER
SF	SUPPLY FAN
T	THERMOSTAT

AIR DEVICE

E	EXHAUST GRILLE
LVR	LOUVER
R	RETURN GRILLE
S	SUPPLY DIFFUSER/GRILLE

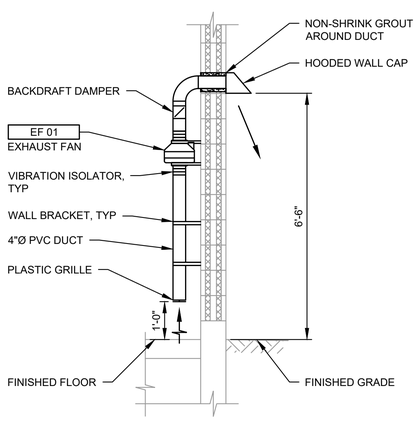

1 / H-3 **HYPOCHLORITE ROOM EXHAUST FAN DETAIL**
SCALE: 1/2"=1'-0"

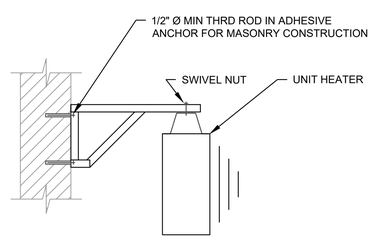

2 / H-3 **HEATER MOUNTING**
SCALE: 1"=1'-0"

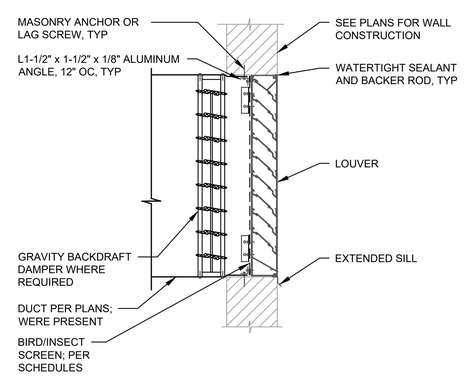

3 / H-3 **LOUVER DETAIL**
SCALE: 1"=1'-0"

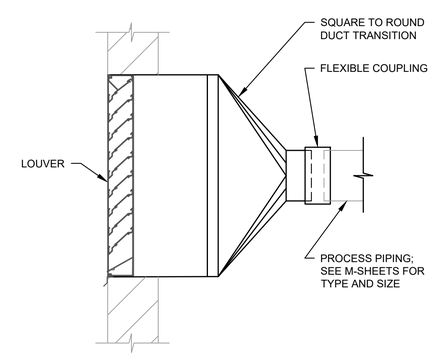

4 / H-3 **PROCESS PIPING CONNECTION DETAIL**
SCALE: 1"=1'-0"

0 1" 2"
TWO INCHES AT FULL SCALE. IF NOT, SCALE ACCORDINGLY

Gray & Osborne, Inc.
CONSULTING ENGINEERS
1130 RAINIER AVENUE SOUTH, SUITE 300
SEATTLE, WASHINGTON 98144

DATE: SEPT 2022	
DRAWN: ASD	
CHECKED: ASD	
APPROVED: AMP	

No.	REVISION	DATE	APPD

STEVEN DECKER — STATE OF WASHINGTON — REGISTERED PROFESSIONAL ENGINEER — 09/22/2022

AARON M. PEASE — STATE OF WASHINGTON — REGISTERED PROFESSIONAL ENGINEER — 09/22/2022

CITY OF LACEY
THURSTON COUNTY WASHINGTON
BEACHCREST WELLFIELD pH IMPROVEMENTS
HVAC NOTES AND DETAILS

SHEET: **H-1**
SHEET: **31 of 81**
JOB NO.: 19520
DWG:H_BLDG_PLN

L:\LACEY\19520 pH Predesign and S17 Facilities Design\PLANSET\H-Sheets\H_BLDG_PLN.dwg, 9/21/2022 1:34 PM, PHILIP MARSHALL

FAN SCHEDULE

BUILDING	ROOM NAME	UNIT NO.	TYPE	MANUFACTURER & MODEL NO.	HP, VOLTAGE, AND PHASE	CONTROLS	CFM AND STATIC PRESSURE	REMARKS
S15R BUILDING	HYPOCHLORITE ROOM	EF 01	PLASTIC INLINE EXHAUST FAN	FANTECH FR 140 OR EQUAL	62 W 115 V 1 Ø	C 01	200 CFM @ 0.2" WC	PROVIDE PLASTIC GRILLE, MOUNTING BRACKETS, VIBRATIONS ISOLATORS, BACKDRAFT DAMPER, DUCTWORK, AND EXTERNAL EXHAUST HOOD.
	TREATMENT ROOM	SF 01	INLINE SUPPLY FAN	GREENHECK SQ-140-VG OR EQUAL	3/4 HP 115 V 1 Ø	T 02	2,000 CFM @ 0.25" WC	PROVIDE THERMAL OVERLOAD, NEMA 4X DISCONNECT, ALUMINUM HOUSING, S.S. FASTENERS, S.S SHAFT, FILTER BOX & HI-PRO POLYESTER FINISH.

LOUVER SCHEDULE

BUILDING	ROOM NAME	LOUVER NO.	TYPE	MANUFACTURER & MODEL NO.	ROUGH OPENING SIZE (WxH)	MOUNTING HEIGHT	REMARKS
S15R BUILDING	TREATMENT ROOM	LVR 01	INTAKE LOUVER	GREENHECK ESD-635 OR EQUAL	32"x32"	BOTTOM 94" AFF	PROVIDE EXTENDED SILL, HYLAR/KYNAR FINISH, BACKDRAFT DAMPER W/ HI-PRO FINISH, INSECT SCREEN, AND CLIP ANGLES.
		LVR 02	EXHAUST LOUVER	GREENHECK ESD-635 OR EQUAL	32"x32"	BOTTOM 94" AFF	PROVIDE EXTENDED SILL, HYLAR/KYNAR FINISH, BACKDRAFT DAMPER W/ HI-PRO FINISH, BIRD SCREEN, AND CLIP ANGLES.
	BLOWER ROOM	LVR 03	INTAKE LOUVER	GREENHECK ESD-635 OR EQUAL	32"x32"	BOTTOM 62" AFF	PROVIDE EXTENDED SILL, HYLAR/KYNAR FINISH, BIRD SCREEN, AND CLIP ANGLES.

GRILLE/DIFFUSER SCHEDULE

BUILDING	ROOM NAME	DIFFUSER/ GRILLE NO.	TYPE	MANUFACTURER & MODEL NO.	SIZE (WxL)	REMARKS
S15R BUILDING	TREATMENT ROOM	1A	SUPPLY GRILLE	PRICE 95 OR EQUAL	18"x18"	PROVIDE DUCT MOUNTING, AND BAKED ENAMEL FINISH.

HEAT PUMP SCHEDULE

BUILDING	ROOM NAME	UNIT NO.	TYPE	MANUFACTURER & MODEL NO.	VOLTAGE, PHASE AND MCA	CONTROLS	STANDARD AIRFLOW	HEATING CAPACITY	COOLING CAPACITY	AHRI LISTED EFFICIENCY	REMARKS
S15R BUILDING	ELECTRICAL ROOM	HP 01	OUTDOOR HEAT PUMP	MITSUBISHI PUZ-A18NKA7 OR EQUAL	208 V 1 Ø 11 A	FC 01	~1,600 CFM	13.6 MBH @ 17 °F OAT	18.0 MBH @ 95 °F OAT	19.8 SEER 11.2 HSPF	PROVIDE INSULATED LINE SET, INSULATED DRAIN PIPE, LINE HIDE SET, AND WIND BAFFLE.
		FC 01	WALL MOUNTED FAN COIL	MITSUBISHI PKA-A18LA OR EQUAL	208 V 1 Ø 1 A	T 01	210-450 CFM				PROVIDE CONDENSATE PUMP AND MITSUBISHI REMOTE ADAPTER WIRING HARNESS (PART #PAC-725AD). LOCATE ABOVE DOOR.

NOTE: HEATING AND COOLING CAPACITIES ARE ASSUMING 70 °F AND 80 °F INDOOR TEMPERATURES RESPECTIVELY, PER THE MANUFACTURER

CONTROL SCHEDULE

BUILDING	ROOM NAME	UNIT NO.	TYPE	CONTROLLED EQUIPMENT	MANUFACTURER & MODEL NO.	HEAT SET POINT	COOL SET POINT	VOLTAGE AND PHASE	REMARKS
S15R BUILDING	ELECTRICAL ROOM	T 01	PROGRAMMABLE THERMOSTAT	FC 01	MITSUBISHI PAR-40MAAU OR EQUAL	50 °F	90 °F	12 VDC	
	TREATMENT ROOM	T 02	MODULATING THERMOSTAT	SF 01	GREENHECK TEMP/HUMIDITY CONTROL OR EQUAL	N/A	90 °F	CONTROL VOLTAGE	
	HYPOCHLORITE ROOM	C 01	TIMER CONTROLLER	EF 01	INTERMATIC T100 SERIES OR EQUAL	N/A	N/A	120 V 1 Ø	PROGRAM TO OPERATE FAN FOR TWO 2 HOUR PERIODS PER DAY.

HEATER SCHEDULE

BUILDING	ROOM NAME	UNIT NO.	TYPE	MANUFACTURER & MODEL NO.	KW OUTPUT	CONTROLS	VOLTAGE AND PHASE	MOUTING TYPE	REMARKS
S15R BUILDING	BLOWER ROOM	HT 01	UNIT HEATER	QMARK MUH OR EQUAL	3 KW	INTERNAL	480 V 3 Ø	WALL BRACKET	PROVIDE INTERNAL THERMOSTAT @ 50 °F, INTEGRAL DISCONNECT, MOUNT 9'-0" ABOVE FINISH FLOOR.
	HYPOCHLORITE ROOM	HT 02	UNIT HEATER	QMARK MUH OR EQUAL	3 KW	INTERNAL	480 V 3 Ø	WALL BRACKET	PROVIDE INTERNAL THERMOSTAT @ 50 °F, INTEGRAL DISCONNECT, MOUNT 9'-0" ABOVE FINISH FLOOR.
	TREATMENT ROOM	HT 03	UNIT HEATER	QMARK MUH OR EQUAL	3 KW	INTERNAL	480 V 3 Ø	WALL BRACKET	PROVIDE INTERNAL THERMOSTAT @ 50 °F, INTEGRAL DISCONNECT, MOUNT 9'-0" ABOVE FINISH FLOOR.
		HT 04	UNIT HEATER	QMARK MUH OR EQUAL	3 KW	INTERNAL	480 V 3 Ø	WALL BRACKET	PROVIDE INTERNAL THERMOSTAT @ 50 °F, INTEGRAL DISCONNECT, MOUNT 9'-0" ABOVE FINISH FLOOR.

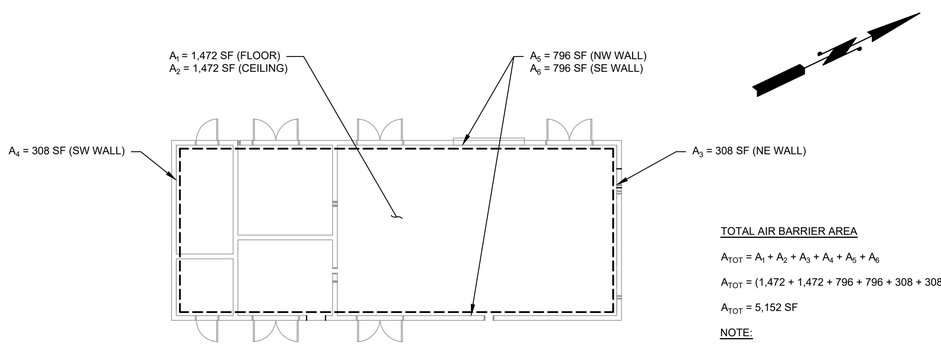

TOTAL AIR BARRIER AREA

$A_{TOT} = A_1 + A_2 + A_3 + A_4 + A_5 + A_6$

A_{TOT} = (1,472 + 1,472 + 796 + 796 + 308 + 308) SF

A_{TOT} = 5,152 SF

NOTE:

AN AIR BARRIER TEST SHALL BE PERFORMED IN ACCORDANCE WITH THE WASHINGTON STATE ENERGY CODE AND ASTM E779.

AIR BARRIER TEST DIAGRAM

SCALE: 3/32"=1'-0"

0 1" 2"

TWO INCHES AT FULL SCALE. IF NOT, SCALE ACCORDINGLY

Gray & Osborne, Inc.
CONSULTING ENGINEERS
1130 RAINIER AVENUE SOUTH, SUITE 300
SEATTLE, WASHINGTON 98144

DATE: SEPT 2022	DRAWN: ASD	CHECKED: ASD	APPROVED: AMP

No.	REVISION	DATE	APPD

ANDREW STEVEN BECKER — STATE OF WASHINGTON — 48375 — REGISTERED PROFESSIONAL ENGINEER — 09/22/2022

AARON M. PEASLEE — STATE OF WASHINGTON — 48205 — REGISTERED PROFESSIONAL ENGINEER — 09/22/2022

CITY OF LACEY
THURSTON COUNTY WASHINGTON
BEACHCREST WELLFIELD pH IMPROVEMENTS
HVAC EQUIPMENT SCHEDULES

SHEET: H-2
SHEET: 32 of 81
JOB NO.: 19520
DWG:H_BLDG_PLN

L:\LACEY\19520 pH Predesign and S17 Facilities Design\PLANSET\H-Sheets\H_BLDG_PLN.dwg, 9/21/2022 1:34 PM, PHILIP MARSHALL

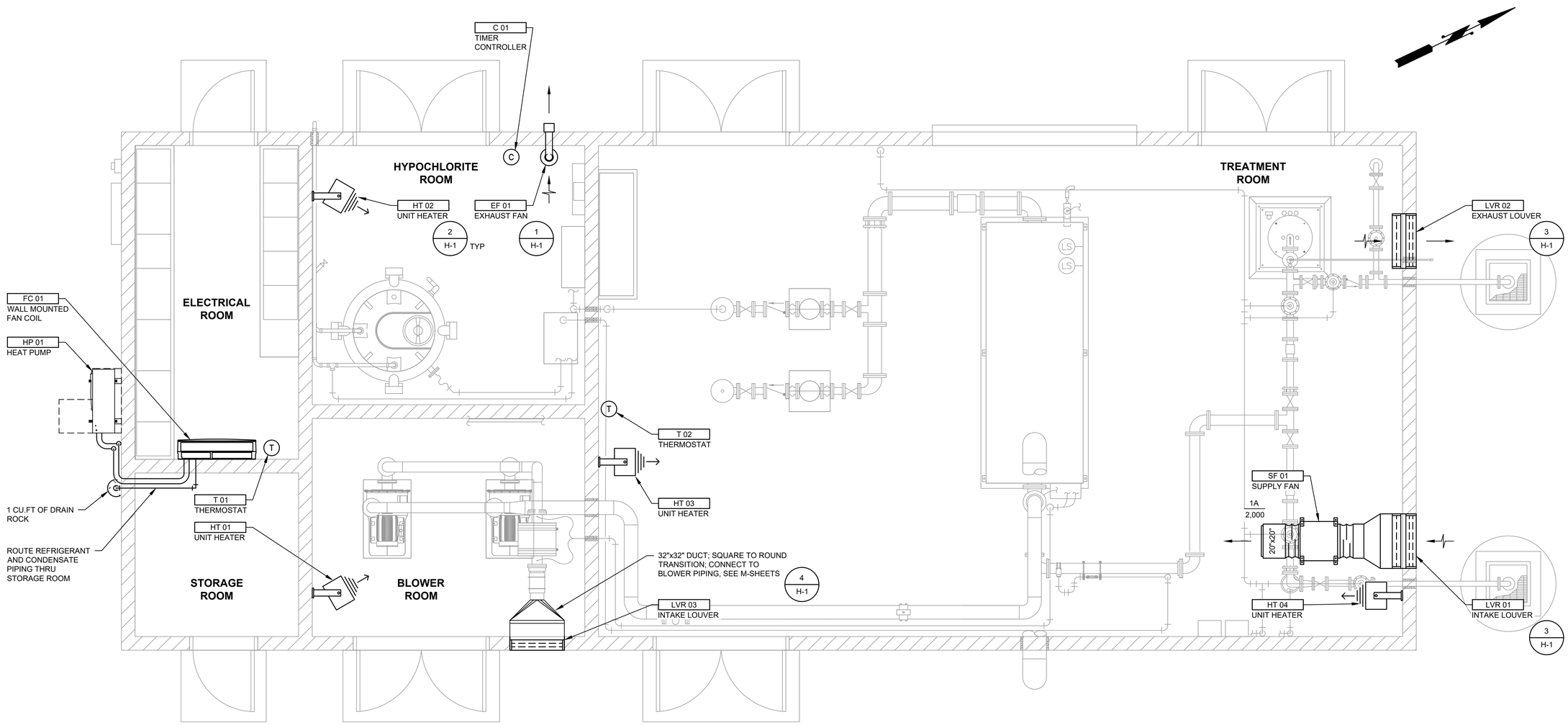

HVAC PLAN

SCALE: 3/8"=1'-0"

0 1" 2"
TWO INCHES AT FULL SCALE.
IF NOT, SCALE ACCORDINGLY

Gray & Osborne, Inc.
CONSULTING ENGINEERS
1130 RAINIER AVENUE SOUTH, SUITE 300
SEATTLE, WASHINGTON 98144

DATE: SEPT 2022	
DRAWN: ASD	
CHECKED: ASD	
APPROVED: AMP	

No.	REVISION	DATE	APPD

STEVEN DECKER WASHINGTON STATE REGISTERED PROFESSIONAL ENGINEER 27032 09/22/2022

AARON M. PEASE WASHINGTON STATE REGISTERED PROFESSIONAL ENGINEER 40876 09/21/2022

CITY OF LACEY
THURSTON COUNTY WASHINGTON
BEACHCREST WELLFIELD pH IMPROVEMENTS
HVAC FLOOR PLAN

SHEET: H-3
SHEET: 33 of 81
JOB NO.: 19520
DWG:H_BLDG_PLN

L:\LACEY\19520 pH Predesign and S17 Facilities Design\PLANSET\H-Sheets\H_BLDG_PLN.dwg, 9/21/2022 1:34 PM, PHILIP MARSHALL

WATER PIPING NOTES

1. ALL PLUMBING WORK SHALL CONFORM WITH THE SPECIFICATIONS AND WITH THE CURRENT EDITION PLUMBING CODE OR SHALL BE APPROVED BY THE LOCAL BUILDING OFFICIAL.
2. INSTALL EXPOSED SHUT OFF VALVE TO ISOLATE ALL PLUMBING FIXTURES.
3. USE WALL AND CEILING FLANGES AT ALL PENETRATIONS.

DRAINAGE PIPING NOTES

1. ALL PLUMBING WORK SHALL CONFORM WITH THE SPECIFICATIONS AND WITH THE CURRENT EDITION PLUMBING CODE OR SHALL BE APPROVED BY THE LOCAL BUILDING OFFICIAL.
2. ALL BURIED DRAINS SERVING FLOOR DRAINS AND OTHER PLUMBING FIXTURES UNDER SLAB SHALL BR CAST IRON SOIL PIPE. MINIMUM SLOPE AT 1/4"/FT. FOR PIPES < 3", AND AT 1/8"/FT. FOR PIPES ≥ 3".
3. ALL BENDS UNDER FLOOR TO BE 45° FITTINGS MAXIMUM.

PLUMBING SYMBOLS & ABBREVIATIONS

	SHUT OFF VALVE
	TEE UP
	TEE DOWN
	90° BEND UP
	90° BEND DOWN AND UP

DRAINAGE PIPING LEGEND

	CI	SEWER PIPE OR DRAIN PIPE
	FCO	FLOOR CLEAN OUT (FCO)
	FD	FLOOR DRAIN (FD)
	ED	EQUIPMENT DRAIN (ED)

NOTE: FOR ADDITIONAL ABBREVIATIONS & SYMBOLS SEE CORRESPONDING ELECTRICAL, STRUCTURAL, & MECHANICAL SHEETS.

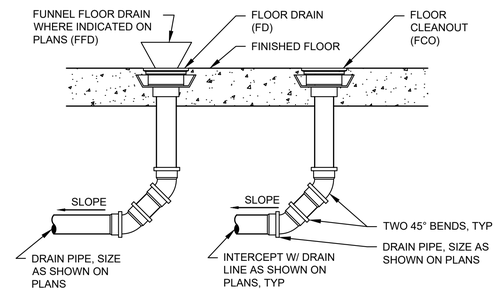

1 TYP **FLOOR DRAIN AND CLEANOUT DETAIL**
NOT TO SCALE

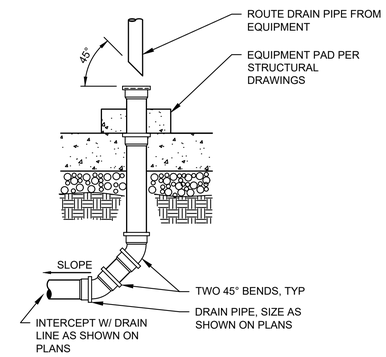

2 TYP **EQUIPMENT DRAIN DETAIL**
NOT TO SCALE

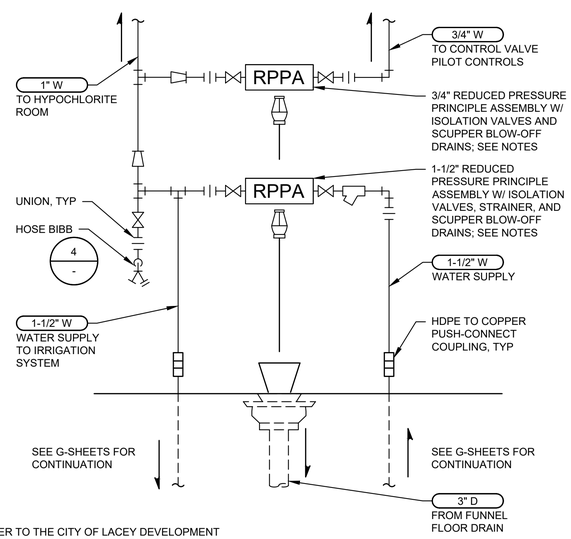

NOTES:

1. REFER TO THE CITY OF LACEY DEVELOPMENT GUIDELINES AND PUBLIC WORKS STANDARDS, SECTION 6.110, BACK-FLOW PREVENTION, FOR SELECTION AND INSTALLATION DETAILS.
2. THE RPPA INSTALLATION SHALL BE INSPECTED AND APPROVED BY A CITY OF LACEY CROSS-CONNECTION CONTROL SPECIALIST (CCS), PRIOR TO TESTING.
3. WHEN THE INSTALLATION HAS BEEN APPROVED BY THE LACEY CCS, THE BACKFLOW ASSEMBLY MUST PASS A FUNCTIONALITY TEST BY A WASHINGTON STATE CERTIFIED BAT (BACKFLOW ASSEMBLY TESTER) AS PER DOH STANDARDS.

3 P-2 **RPPA ELEVATION**
SCALE: 3/4"=1'-0"

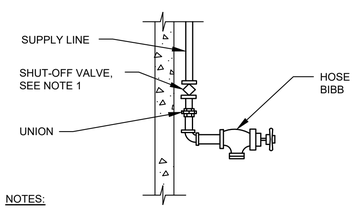

NOTES:

1. ALL HOSE BIBBS TO BE CONTROLLED BY INDIVIDUAL SHUT-OFF VALVES (BALL OR PLUG VALVES), EXCEPT WHERE INDIVIDUALLY CONTROLLED BRANCH MAIN SERVES HOSE BIBBS ONLY.
2. FOR SIZE AND LOCATION SEE DRAWINGS.
3. MOUNT HOSE BIB @ 5'-0" AFF.

4 - **HOSE BIB DETAIL**
SCALE: NTS

0 1" 2"
TWO INCHES AT FULL SCALE. IF NOT, SCALE ACCORDINGLY

Gray & Osborne, Inc.
CONSULTING ENGINEERS
1130 RAINIER AVENUE SOUTH, SUITE 300
SEATTLE, WASHINGTON 98144

DATE: SEPT 2022	DRAWN: ASD	CHECKED: ASD	APPROVED: AMP

No.	REVISION	DATE	APPD

STEVEN DECKER — STATE OF WASHINGTON — 40080 — REGISTERED PROFESSIONAL ENGINEER — 09/22/2022

AARON M. PEASE — STATE OF WASHINGTON — 40076 — REGISTERED PROFESSIONAL ENGINEER — 09/22/2022

CITY OF LACEY
THURSTON COUNTY WASHINGTON
BEACHCREST WELLFIELD pH IMPROVEMENTS
PLUMBING NOTES AND DETAILS

SHEET: **P-1**
SHEET: **34 of 81**
JOB NO.: 19520
DWG:P_BLDG_PLN

L:\LACEY\19520 pH Predesign and S17 Facilities Design\PLANSET\P-Sheets\P_BLDG_PLN.dwg, 9/21/2022 1:35 PM, PHILIP MARSHALL

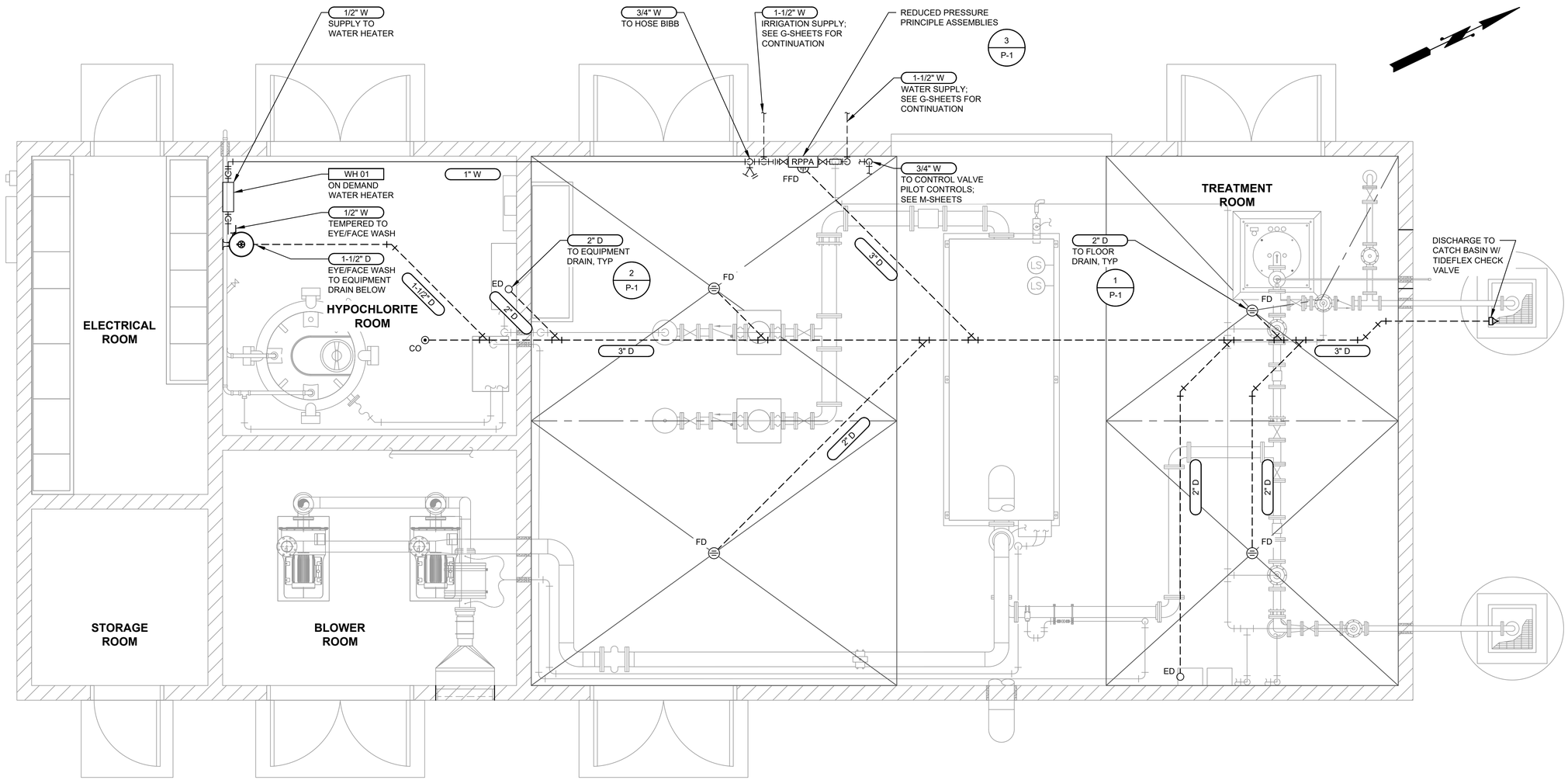

PLUMBING AND DRAINAGE PLAN

SCALE: 3/8"=1'-0"

DOMESTIC WATER HEATER SCHEDULE										
BUILDING	LOCATION	ID. NO.	TYPE	MFR & MODEL NO.	ELECTRICAL			MOUNTING	CAPACITY	REMARKS
					KW	VOLTS	PHASE			
S15R BUILDING	HYPOCHLORITE ROOM	WH 01	ON DEMAND	HAWS TWBS.EW.H OR EQUAL	20	480	3	WALL	34 DEGREES F @ 4 GPM	

0 1" 2"
TWO INCHES AT FULL SCALE.
IF NOT, SCALE ACCORDINGLY

Gray & Osborne, Inc.
CONSULTING ENGINEERS
1130 RAINIER AVENUE SOUTH, SUITE 300
SEATTLE, WASHINGTON 98144

DATE: SEPT 2022
DRAWN: ASD
CHECKED: ASD
APPROVED: AMP

No.	REVISION	DATE	APPD

STEVEN DECKER — STATE OF WASHINGTON — 40359 — REGISTERED PROFESSIONAL ENGINEER — 09/22/2022

AARON M. PEASE — STATE OF WASHINGTON — 40679 — REGISTERED PROFESSIONAL ENGINEER — 09/22/2022

CITY OF LACEY
THURSTON COUNTY WASHINGTON
BEACHCREST WELLFIELD pH IMPROVEMENTS
PLUMBING AND DRAINAGE PLAN

SHEET: P-2
SHEET: 35 of 81
JOB NO.: 19520
DWG:P_BLDG_PLN

L:\LACEY\19520 pH Predesign and S17 Facilities Design\PLANSET\P-Sheets\P_BLDG_PLN.dwg, 9/21/2022 1:36 PM, PHILIP MARSHALL

GENERAL STRUCTURAL NOTES

GENERAL
THE GENERAL CONTRACTOR SHALL VERIFY ALL DIMENSIONS AND SITE CONDITIONS BEFORE STARTING WORK. THE ENGINEER SHALL BE NOTIFIED OF ANY DISCREPANCY. USE DETAIL MARKED "TYPICAL" WHEREVER APPLICABLE. CHANGES, OMISSIONS OR SUBSTITUTIONS ARE NOT PERMITTED WITHOUT WRITTEN APPROVAL OF THE ENGINEER. REFER TO THE SPECIFICATIONS FOR FURTHER REQUIREMENTS. DO NOT SCALE THE DRAWINGS.

ALL MATERIALS AND WORKMANSHIP SHALL CONFORM TO THE 2018 EDITION OF THE INTERNATIONAL BUILDING CODE.

THE DESIGN, ADEQUACY AND SAFETY OF ERECTION BRACING, SHORING, TEMPORARY SUPPORTS, ETC., IS THE SOLE RESPONSIBILITY OF THE CONTRACTOR, AND HAS NOT BEEN CONSIDERED BY THE ENGINEER OF RECORD. THE CONTRACTOR IS RESPONSIBLE FOR THE STABILITY OF THE STRUCTURE PRIOR TO ITS COMPLETION. THE CONTRACTOR SHALL PROVIDE THE NECESSARY BRACING TO PROVIDE STABILITY PRIOR TO THE COMPLETION OF THE STRUCTURE.

THE GENERAL NOTES APPLY TO ALL STRUCTURES UNLESS NOTED OTHERWISE (U.N.O.). LOCATION AND SIZE OF ANCHOR BOLTS FOR SPECIFIC EQUIPMENT SHALL BE SPECIFIED BY THE VENDOR. CONTRACTOR SHALL COORDINATE LOCATIONS OF STRUCTURAL OPENINGS, PENETRATIONS AND EMBEDDED ITEMS WITH THE MECHANICAL, ELECTRICAL, PLUMBING AND VENTILATION SECTIONS OF THE DRAWINGS AND WITH SUPPLIERS AND SUBCONTRACTORS AS MAY BE REQUIRED.

SPECIAL INSPECTION & TESTING
SPECIAL INSPECTIONS SHALL MEET THE REQUIREMENTS OF IBC CHAPTER 17.
OBSERVE THE WORK ASSIGNED FOR CONFORMANCE WITH APPROVED DRAWINGS AND SPECIFICATIONS.

FURNISH INSPECTION REPORTS TO THE BUILDING OFFICIAL AND ENGINEER. DISCREPANCIES SHALL BE BROUGHT TO THE IMMEDIATE ATTENTION OF THE CONTRACTOR FOR CORRECTION; THEN, IF NOT CORRECTED, TO THE BUILDING OFFICIAL AND ENGINEER. SUBMIT A FINAL REPORT STATING THE WORK WAS IN CONFORMANCE WITH THE APPROVED DRAWINGS AND SPECIFICATIONS AND THE APPLICABLE WORKMANSHIP PROVISIONS OF IBC.

SPECIAL INSPECTION REQUIRED:
CONCRETE: IN ACCORDANCE WITH SECTION 1705.3 AND TABLE 1705.3
MASONRY: IN ACCORDANCE WITH SECTION 1705.4
WOOD: IN ACCORDANCE WITH SECTION 1705.5
SOIL: IN ACCORDANCE WITH SECTION 1705.6 AND TABLE 1705.6

SHOP DRAWINGS
SHOP DRAWINGS, WHERE REQUIRED, SHALL BE CHECKED AND APPROVED BY THE GENERAL CONTRACTOR PRIOR TO SUBMITTING FOR ENGINEER REVIEW. SHOP DRAWINGS SHALL BE SUBMITTED TO THE ENGINEER FOR REVIEW OF DESIGN INTENT, PRIOR TO FABRICATION. GENERAL CONTRACTOR IS RESPONSIBLE FOR VERIFICATION AND COORDINATION OF DIMENSIONS AND DETAILS FOR EACH SUBCONTRACTOR.

DESIGN LOADS
ROOF SNOW LOAD:
DESIGN SNOW LOAD,Ps..... 25 PSF

ROOF LIVE LOAD:, Lr..... 20 PSF
FLOOR LIVE LOAD:, Lf..... 125 PSF

WIND DESIGN DATA:
ULTIMATE WIND SPEED (3-SECOND GUST), Vult..... 115 MPH
NOMINAL WIND SPEED, Vasd..... 89.1 MPH
RISK CATEGORY..... IV
WIND EXPOSURE..... C

EARTHQUAKE DESIGN DATA
MAPPED SPECTRAL RESPONSE
ACCELERATIONS
Ss..... 1.399 g
S_1..... 0.503 g
SITE CLASS..... D
SPECTRAL RESPONSE COEFFICIENT
Sds..... 0.933 g
S_{d1}..... 0.603 g
SEISMIC IMPORTANCE FACTOR, Ie..... 1.5
RISK CATEGORY..... IV
SEISMIC DESIGN CATEGORY..... D
BASIC SEISMIC-FORCE-RESISTING SYSTEM(S)..... SPECIAL REINFORCED MASONRY SHEAR WALLS

ANALYSIS PROCEDURE USED..... EQUIVALENT LATERAL FORCE ANALYSIS

FOUNDATION DATA PER GEOTECHNICAL REPORT BY PACIFIC GROUNDWATER GROUP, DATED DECEMBER 16, 2019.

ALLOWABLE BEARING PRESSURE:.....2000 PSF

ABOVE ARE ASSUMED PER DATA PROVIDED,
CONTRACTOR MUST VERIFY IN FIELD.

EXTEND ALL EXTERIOR FOOTINGS 2'-0" MINIMUM BELOW FINISHED GRADE. UNO (UNLESS NOTED OTHERWISE), BOTTOM OF ALL FOOTINGS TO BEAR ON A MINIMUM OF 12" OF GRAVEL BORROW OR CRUSHED SURFACING BASE COURSE OVER UNDISTURBED SOIL. NO FOOTING SHALL BEAR HIGHER THAN 1 VERTICAL TO 1.5 HORIZONTAL SLOPE ABOVE ANY EXCAVATION, EXISTING OR PLANNED. CONTRACTOR SHALL PROVIDE TEMPORARY SHORING TO PREVENT MOVEMENT OF WALLS IF BACKFILL IS PLACED BEFORE FLOOR SYSTEM IS IN PLACE. THERE SHALL BE 95% COMPACTION (ASTM D1557 MODIFIED PROCTOR DENSITY) OF ALL BACKFILL SOIL UNDER SLABS ON GRADE.

MASONRY
SPECIFIED COMPRESSIVE STRENGTH OF MASONRY ASSEMBLY: f'm=1500 PSI.
CONCRETE MASONRY UNITS: ASTM C90, GRADE N-TYPE I, MEDIUM WEIGHT RUNNING BOND.
MORTAR: ASTM C270, TYPE S, MIN. COMPRESSIVE STRENGTH OF 1800 PSI AT 28 DAYS. GROUT: ASTM C476 WITH A MIN. COMPRESSIVE STRENGTH OF 2000 PSI AT 28 DAYS. FILL ALL CELLS CONTAINING REINFORCING WITH GROUT IN LIFTS NOT EXCEEDING 4'-0" IN HEIGHT. FILL OTHER CELLS WITH GROUT AS INDICATED ON DRAWINGS. ALL REINFORCEMENT SHALL BE IN PLACE PRIOR TO GROUTING WITH VERTICAL BARS HELD AT TOP, BOTTOM AND 192 DIAMETERS MAXIMUM ON CENTERS. CONTRACTOR SHALL PROVIDE TEMPORARY BRACING FOR MASONRY WALLS, AS REQUIRED, UNTIL CONNECTIONS TO FLOOR AND/OR ROOF DIAPHRAGMS ARE COMPLETED.

CAST-IN-PLACE CONCRETE
CONCRETE SHALL HAVE THE FOLLOWING PROPERTIES:
28-DAY STRENGTH f'c=4,000 PSI
AIR ENTRAINMENT: 5%-7%
MAXIMUM SLUMP: 3" FOR SLABS FOOTINGS, 4" FOR WALLS, COLUMNS AND BEAMS. CONSTRUCTION TO BE IN ACCORDANCE WITH ACI 318.

SUBMIT MIX DESIGN FOR REVIEW AND PROVIDE NOT LESS THAN 6 SACKS OF CEMENT PER CUBIC YARD FOR ALL CONCRETE WITH MAXIMUM W/C=0.45.

REINFORCING STEEL
WELDED WIRE FABRIC (W.W.F.): ASTM A82 AND A185
DEFORMED BARS: ASTM A615, GRADE 60 (GRADE 40 FOR #3).
UNLESS OTHERWISE NOTED ON THESE DRAWINGS, MINIMUM CONCRETE COVER FOR REINFORCING BARS SHALL BE AS FOLLOWS:
CONCRETE CAST AGAINST SOIL=3".
FORMED CONCRETE AGAINST SOIL=2".
WALLS, COLUMNS AND BEAMS EXPOSED TO WATER, SEWAGE & WEATHER=2".
WALLS, COLUMNS AND BEAMS DRY CONDITION=1 1/2".

PROVIDE 2-#5 MIN. U.N.O. TRIM BARS AROUND ALL OPENINGS IN CONCRETE WALLS OR SLAB EXTENDING 2'-6" PAST CORNERS, TYP. AT TIME OF CONCRETE PLACEMENT, REINFORCING SHALL BE FREE OF MUD, OIL, OR OTHER NONMETALLIC COATINGS THAT MAY DECREASE BOND.

WELDING OF REINFORCING BARS SHALL CONFORM TO ANSI/AWS D1.4.
WHERE PERMITTED, LOW HYDROGEN WELDING RODS SHALL BE USED FOR ALL WELDING OF REINFORCING BARS. SPECIAL INSPECTION IS REQUIRED FOR ALL FIELD WELDING.

SUBMIT SHOP DRAWINGS OF REINFORCING STEEL FOR REVIEW BY THE ENGINEER PRIOR TO FABRICATION. REINFORCING SHALL BE DETAILED IN ACCORDANCE WITH ACI 315 AND 318 (LATEST EDITION).

STRUCTURAL STEEL AND MISCELLANEOUS METALS
CHANNELS, ANGLES, PLATES, AND BARS: ASTM A36, Fy=36 KSI.

ALL BOLTS FOR CONNECTIONS IN SUBMERGED CONDITION SHALL BE: ASTM F593C OR F593D STAINLESS STEEL (SS) BOLTS. ALL OTHERS SHALL BE GALVANIZED ASTM A325-N BOLTS HIGH STRENGTH BOLTS (H.S.B.), U.N.O. AS ASTM A307 MACHINE BOLTS (M.B.). WHERE HIGH STRENGTH BOLTS ARE USED, THEY SHALL BE INSTALLED WITH LOAD INDICATOR DEVICES (LOAD INDICATOR WASHERS OR SNAP-OFF HEADS).
ADHESIVE ANCHORS: HILTI HIT-RE500 V3 OR APPROVED EQUAL, U.N.O. INSTALL PER MANUFACTURER'S RECOMMENDATIONS.

HEADED ANCHOR STUDS (H.A.S.): ASTM A108, Fy=50 KSI, END WELDED PER MANUFACTURER'S RECOMMENDATIONS.
ALL ANCHOR BOLTS AND THREADED RODS: ASTM F1554, U.N.O. ALL ANCHOR BOLTS MUST BE ACCURATELY PLACED IN THEIR FINAL LOCATION PRIOR TO POURING CONCRETE, "WET STICKING" OF ANCHOR BOLTS IS NOT ALLOWED.

WELDING ELECTRODES OR WIRES: AWS A5.1 OR A5.5, E70XX; AWS A5.17, E70S-X; AWS A5.20, E7XT-X.
FOR ALL SHOP WELDS AND FIELD WELDS OF ALL LATERAL RESISTING ELEMENTS, ELECTRODES SHALL BE E70 WITH A MINIMUM SPECIFIED CVN OF 20 FT-LBS AT -20 DEGREES FAHRENHEIT. ALL WELDS SHALL BE 3/16" MINIMUM U.N.O.

ERECTION AND FABRICATION IN ACCORDANCE WITH AISC "SPECIFICATION FOR STRUCTURAL STEEL BUILDINGS." WELDING SHALL CONFORM TO AWS "STRUCTURAL WELDING CODE - STEEL". ALL WELDING SHALL BE PERFORMED BY AWS/WABO CERTIFIED WELDERS.

ALL STEEL MEMBERS AND FASTENERS SHALL BE HOT-DIP GALVANIZED, UNO.

WOOD
ROOF SHEATHING SHALL BE 5/8" (NOMINAL) MIN. U.N.O. APA RATED SHEATHING 24/0, EXPOSURE 1, SIZED FOR SPACING. INSTALL PANELS WITH 1/4" SPACING AT END JOINTS AND 1/8" SPACING AT EDGE JOINTS MIN. INSTALL PLYWOOD SHEATHING WITH FACE GRAIN PERPENDICULAR TO SUPPORTS.

SAWN LUMBER: HEM-FIR #1 OR BETTER, U.N.O. WWPA GRADING RULES. ALL DIMENSIONS NOTED ARE NOMINAL. WOOD BEARING ON OR WITHIN 1" OF CONCRETE OR CMU OR WITHIN 6" OF EARTH SHALL BE TREATED WITH AN APPROVED PRESERVATIVE. ALL NAILS ARE TO BE "COMMON." ALL NAILS IN TREATED TIMBER SHALL BE GALVANIZED. ALL FRAMING CONNECTORS NOTED ARE PER SIMPSON STRONG TIE COMPANY INC. OR ENGINEER APPROVED EQUAL. SEE MANUFACTURER'S REQUIREMENTS.

TREATED LUMBER SHALL BE BRANDED WITH A QUALITY CONTROL AGENCY MARK BY AMERICAN WOOD PROTECTION ASSOCIATION.

FRAMING ANCHORS AND CONNECTORS: SIMPSON OR APPROVED EQUAL AS INDICATED ON DRAWINGS. INSTALL PER MANUFACTURER'S RECOMMENDATIONS. FOR NAILING NOT SHOWN ON DRAWINGS, USE IBC NAILING SCHEDULE, TABLE NO. 2304.9.1. ALL WOOD BEARING ON CONCRETE OR MASONRY, IF LESS THAN 4'-0" ABOVE GRADE, SHALL BE PRESSURE TREATED DOUGLAS FIR. STRUCTURAL MEMBERS SHALL NOT BE CUT FOR PIPES, ETC., UNLESS SPECIFICALLY NOTED OR DETAILED.

PREFABRICATED WOOD TRUSSES
ROOF TRUSSES SHALL BE DESIGNED BY THE CERTIFIED MANUFACTURER FOR THE SPANS AND CONDITIONS SHOWN ON THE DRAWINGS AND THE LOADS LISTED BELOW.
MAXIMUM TRUSS SPACING: 24" O.C.

TRUSS LOADING UNLESS NOTED OTHERWISE ON DRAWINGS:
TOP CHORD LIVE LOAD=25 PSF.
TOP CHORD DEAD LOAD=5 PSF.
BOTTOM CHORD LIVE LOAD=10 PSF.
BOTTOM CHORD DEAD LOAD PLUS SELF-WEIGHT=10 PSF.
TOP CHORD WIND UPLIFT LOAD=30 PSF.
PER IBC, UNIHABITABLE ATTICS SHALL BE DESIGNED FOR A LIVE LOAD OF 10 PSF.
ADDITIONAL LIVE LOAD: SNOW LOAD DUE TO DRIFTING SHALL BE INCLUDED AS SPECIFIED ON THE DRAWINGS.

TRUSSES TO BE FABRICATED BY A CERTIFIED MEMBER OF THE TRUSS PLATE INSTITUTE. DESIGN, FABRICATION AND ERECTION TO CONFORM TO THE TRUSS PLATE INSTITUTE STANDARDS. CONNECTOR PLATES SHALL BE ICC APPROVED WITH A MINIMUM SIZE OF 3"x5". ALL CHORD MEMBERS SHALL HAVE LUMBER GRADE STAMPS; ALL WEB MEMBERS SHALL HAVE GRADE STAMPS OR ALL WEB MEMBERS, FOR A GIVEN TRUSS, SHALL BE MADE FORM THE SAME LUMBER GRADE WITH AT LEAST 50% OF THE WEB MEMBERS BEARING A GRADE STAMP. TRUSS DESIGNS AND ERECTION PLANS SHALL BE BY A PROFESSIONAL ENGINEER REGISTERED IN THE STATE OF WASHINGTON. ERECTION PLANS SHALL SHOW TRUSS SPACING, TRUSS MARK NUMBERS (CORRESPONDING TO THE DESIGN CALCULATIONS), CONCENTRATED LOADS, PERMANENT INDIVIDUAL TRUSS MEMBER RESTRAINT PER IBC SECTION 2303.4.1.2 AS REQUIRED BY THE TRUSS DESIGN AND ERECTION BRACING. SHOP DRAWING SHALL INCLUDE, FOR EACH TYPE OF TRUSS, DIMENSIONS AND CONFIGURATIONS, NOMINAL LUMBER SIZE AND GRADE, SPECIFICATIONS FOR CONNECTOR PLATE USED, SIZE AND LOCATION OF EACH CONNECTOR AT EACH JOINT AND AMOUNT OF CAMBER IF REQUIRED. DESIGN CALCULATIONS, SHOP DRAWINGS AND ERECTION PLANS SHALL BE SUBMITTED FOR REVIEW BY THE ENGINEER PRIOR TO FABRICATION.

0 1" 2"
TWO INCHES AT FULL SCALE.
IF NOT, SCALE ACCORDINGLY

Gray & Osborne, Inc.
CONSULTING ENGINEERS
1130 RAINIER AVENUE SOUTH, SUITE 300
SEATTLE, WASHINGTON 98144

DATE: SEPT 2022
DRAWN: RAH
CHECKED: ZK
APPROVED: MJB

No.	REVISION	DATE	APPD

MYRON J. BASNEN
STATE OF WASHINGTON
STATE REGISTERED PROFESSIONAL ENGINEER
9/22/2022

CITY OF LACEY
THURSTON COUNTY WASHINGTON
BEACHCREST WELLFIELD pH IMPROVEMENTS
GENERAL STRUCTURAL NOTES

SHEET: S-1
SHEET: 36 of 81
JOB NO.: 19520
DWG:S_STND

L:\LACEY\19520 pH Predesign and S17 Facilities Design\PLANSET\S-Sheets\S_STND.dwg, 9/21/2022 1:36 PM, PHILIP MARSHALL

SPECIAL INSPECTION SCHEDULE

VERIFICATION AND INSPECTION	CI	PI	REMARKS/REFERENCES
CONCRETE:			
REINFORCING STEEL INCLUDING PLACEMENT	–	X	ACI 318: CH 20, 25.2, 25.3, 26.6.1–26.6.3
ANCHOR RODS, EMBEDDED BOLTS AND INSERTS	X	–	PRIOR TO AND DURING PLACEMENT OF CONCRETE
USE OF REQUIRED DESIGN MIX	–	X	ACI 318: CH. 19, 26.4.3, 26.4.4
CONCRETE SLUMP, AIR CONTENT, TEMPERATURE AND TEST SPECIMENS	X	–	WHILE MAKING SPECIMENS FOR STRENGTH TESTS
CONCRETE AND SHOTCRETE PLACEMENT	X	–	ACI 318: 26.5
CONCRETE CURING	–	X	ACI 318: 26.5.3–26.5.5
CONCRETE FORMWORK FOR SHAPE, LOCATIONS AND DIMENSIONS	–	X	ACI 318: 26.11.1.2(6)
MASONRY:			
PROVISIONS OF CONSTRUCTION DOCUMENTS AND SUBMITTALS	–	X	
VERIFICATION OF F'm and F'aac	–	X	PRIOR TO CONSTRUCTION
SLUMP FLOW AND VSI	X	–	
SITE–PREPARED MORTAR AND MORTAR JOINTS	–	X	BEGINS & PRIOR CONSTRUCTION
LOCATION OF REINFORCEMENT, CONNECTORS, AND ANCHORAGES	–	X	AS MASONRY CONSTRUCTION BEGINS
SIZE AND LOCATION OF STRUCTURAL ELEMENTS	–	X	DURING CONSTRUCTION
ANCHOR TYPE, SIZE AND LOCATION	–	X	DURING CONSTRUCTION
SIZE, GRADE AND TYPE OF REINFORCEMENT, BOLTS AND ANCHORAGES	–	X	DURING/PRIOR CONSTRUCTION
HOT/COLD WEATHER CONSTRUCTION	–	X	DURING CONSTRUCTION
GROUT SPACE	–	X	PRIOR TO GROUTING
SOILS:			
VERIFY DESIGN BEARING CAPACITY	–	X	
VERIFY EXCAVATIONS	–	X	
CLASSIFICATION AND TESTING OF COMPACTED FILL MATERIALS	–	X	
USE OF MATERIALS, DENSITIES AND LIFT THICKNESSES	X	–	DURING PLACEMENT AND COMPACTION
OBSERVE SUBGRADE AND SITE PREPARED PROPERLY	–	X	PRIOR TO PLACEMENT OF COMPACTED FILL
WOOD:			
TYPE AND SPACING OF STRUCTURAL PANEL NAILING	–	X	IBC 1705.11.3
TYPE AND INSTALLATION OF TRUSS SEISMIC TIES	–	X	

INSPECTION SCHEDULE NOTES

1. ITEMS MARKED WITH AN "X" REQUIRE INSPECTION BY A SPECIAL INSPECTOR APPROVED BY THE BUILDING OFFICIAL.
2. ITEMS MARKED "NA" ARE NOT APPLICABLE TO THIS PROJECT.
3. CI = CONTINUOUS INSPECTION DURING PROGRESS OF WORK BY SPECIAL INSPECTOR.
4. PI = PERIODIC INSPECTION BY SPECIAL INSPECTOR AS REQUIRED TO CONFIRM CONFORMANCE OF WORK.
5. TESTING AND INSPECTION REPORTS SHALL BE SUBMITTED TO THE ENGINEER, BUILDING OFFICIAL AND CONTRACTOR.
6. CONTRACTOR SHALL COORDINATE AND SCHEDULE SPECIAL INSPECTION WITH THE OWNER'S DESIGNATED TESTING AGENCY.

SUPPLEMENTAL STRUCTURAL ABBREVIATIONS:

ABV	ABOVE	FRM'G	FRAMING	STIRR	STIRRUP
AFF	ABOVE FINISH FLOOR	FS	FAR SIDE	STRUC	STRUCTURE(AL)
ADD'L	ADDITIONAL	FTG	FOOTING	SYM	SYMMETRICAL
ADJ	ADJACENT	GA	GAUGE	T	TOP
AL	ALUMINUM	GB	GRADE BEAM	T&G	TONGUE AND GROOVE
APPRX	APPROXIMATE	GLB	GLUE–LAMINATED BEAM	TMPRY	TEMPORARY
ARCH	ARCHITECTURAL	HAS	HEADER ANCHOR STUDS	TN	TOE NAIL
@	AT	HDR	HEADER	TO	TOP OF
BEL	BELOW	HF	HEM–FIR	TOS	TOP OF SLAB
BF	BRACED FRAME	HGR	HANGER	TRANS	TRANSVERSE
BM	BEAM	HSB	HIGH STRENGTH BOLT (A325 UNO)	TYP	TYPICAL
BN	BOUNDRY NAIL	HSS	HOLLOW STRUCTURAL STEEL	UNO	UNLESS NOTED OTHERWISE
BNDRY	BOUNDRY	IBC	INTERNATIONAL BUILDING CODE	VFY	VERIFY
BO	BOTTOM OF	IF	INSIDE FACE	WHS	WELDED HEADED STUD
BOS	BOTTOM OF SLAB	INT	INTERIOR	WP	WORK POINT
BOT	BOTTOM	JST	JOIST	WS	WESTERN SPECIES
BRDG	BRIDGE(ING)	K	KIPS (1000 POUNDS)	WTS	WELDED THREADED STUD
BRG	BEARING	LAT	LATERAL	X–STG	EXTRA STRONG
CAM	CAMBER(ED)	LDGR	LEDGER	XX–STG	DOUBLE EXTRA STRONG
CANT	CANTILEVER(ED)	LLH	LONG LEG HORIZONTAL		
CDF	CONTROLLED DENSITY FILL	LLV	LONG LEG VERTICAL		
CG	CENTER OF GRAVITY	LS	LAG SCREW		
CIP	CAST IN PLACE	LSL	LAMINATED STRAND LUMBER		
CJ	CONTROL JOINT	LT WT	LIGHT WEIGHT		
CJP	COMPLETE JOINT PENETRATION	LVL	LAMINATED VENEER LUMBER		
COL	COLUMN	MAS	MASONRY		
CONST	CONSTRUCTION	MAT'L	MATERIAL		
CONT	CONTINUOUS	MB	MACHINE BOLT (A307)		
CTSK	COUNTERSINK	MFR	MANUFACTURER		
D	DEPTH	MRF	MOMENT RESISTING FRAME		
d	PENNY (NAILS)	MTL	METAL		
DBL	DOUBLE	(N)	NEW MEMBER		
DF	DOUGLAS FIR	NS	NEAR SIDE		
DIAG	DIAGONAL	OH	OVERHANG		
DIAPH	DIAPHRAGM	ORNT	ORIENTATE (ION)		
do	DITTO (DO OVER)	PAR	PARALLEL		
DWG	DRAWING	P/C	PRECAST CONCRETE		
DWL	DOWEL	PERP	PERPENDICULAR		
EA	EACH	PSL	PARALLEL STRAND LUMBER		
EF	EACH FACE	PT	PRESSURE TREAT(ED)		
EJ	EXPANSION JOINT	P/T	POST TENSIONED		
EMBD	EMBED(MENT)	QTY	QUANTITY		
EN	EDGE NAIL	REF	REFERENCE		
ENG	ENGINEER	REINF	REINFORCEMENT		
EQ	EQUAL	SHT	SHEET		
ES	EACH SIDE	SHTG	SHEATHING		
EXIST	EXISTING MEMBER	SIM	SIMILAR		
EXT	EXTERIOR	SKW	SKEW(ED)		
FFE	FINISHED FLOOR ELEVATION	SPC	SPACING		
FN	FACE NAIL	SS	STAINLESS STEEL		
FND	FOUNDATION	STGR	STAGGER		
FO	FACE OF	STIFF	STIFFENER		

STRUCTURAL LEGEND

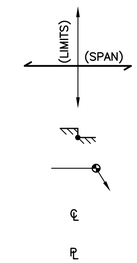

GRATING OR STRUCTURAL SPAN

DIFFERENCE IN ELEVATIONS

ELEVATION TARGET (REF.)

CENTERLINE

PLATE

0 1" 2"
TWO INCHES AT FULL SCALE.
IF NOT, SCALE ACCORDINGLY

Gray & Osborne, Inc.
CONSULTING ENGINEERS
1130 RAINIER AVENUE SOUTH, SUITE 300
SEATTLE, WASHINGTON 98144

DATE: SEPT 2022
DRAWN: RAH
CHECKED: ZK
APPROVED: MJB

No.	REVISION	DATE	APPD

9/22/2022

CITY OF LACEY
THURSTON COUNTY WASHINGTON
BEACHCREST WELLFIELD pH IMPROVEMENTS
SPECIAL INSPECTION SCHEDULE, SUPPLEMENTAL STRUCTURAL ABBREVIATIONS, AND STRUCTURAL LEGEND

SHEET: S-2
SHEET: 37 of 81
JOB NO.: 19520
DWG:S_STND

L:\LACEY\19520 pH Predesign and S17 Facilities Design\PLANSET\S-Sheets\S_STND.dwg, 9/21/2022 1:36 PM, PHILIP MARSHALL

REINF	LAP
#4	2'–4"
#5	3'–0"
#6	3'–6"
#7	4'–3"
#8	4'–10"
#9	5'–3"
#10	6'–6"
#11	8'–0"

1 / TYP **TYP LAP SCHEDULE**
NOT TO SCALE

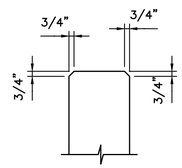

2 / TYP **TYP CHAMFER DETAIL**
NOT TO SCALE

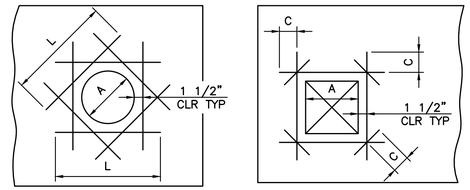

TYPE I **TYPE II**

	TYPE I		TYPE II	
OPENING SIZE (A)	MINIMUM BAR LENGTH (L)	BAR SIZE	(C)	BAR SIZE
0" – 12"	3' – 9"	#5	1' – 0'	MATCH VERTICAL BARS OR LARGEST BAR IN SLABS OR WALKWAYS
13" – 18"	4' – 9"	#6	1' – 3'	
19" – 24"	6' – 9"	MATCH VERTICAL BARS OR LARGEST BAR IN SLABS OR WALKWAYS	2' – 6'	
25" – 36"	7' – 9"		2' – 6'	
36"→	8' – 9"		2' – 6'	

NOTE:

ALL BARS, EACH FACE. USE THESE BAR SIZES UNLESS OTHERWISE NOTED.

3 / TYP **TYP PENETRATION REINFORCING DETAIL**
NOT TO SCALE

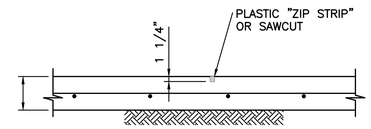

CONTROL JOINT

4 / TYP **TYP SLAB JOINT DETAIL**
NOT TO SCALE

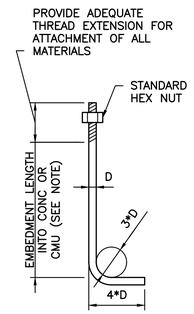

BOLT DIA. "D"	MINIMUM EMBEDMENT	
	ANCHOR BOLTS IN HORIZ. SURFACE	ANCHOR BOLTS IN VERT. SURFACE
1/2"	8"	7"
5/8"	8"	7"
3/4"	12"	7"
7/8"	12"	8"
1"	14"	9"
1 1/8"	14"	10"

NOTE:

ANCHOR BOLT EMBEDMENT IN VERTICAL SURFACE APPLIES TO CONCRETE ONLY.

5 / TYP **TYP ANCHOR BOLT DETAIL**
NOT TO SCALE

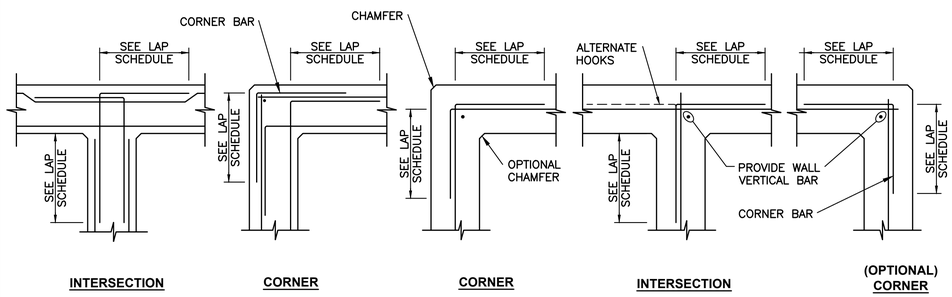

DOUBLE CURTAIN **SINGLE CURTAIN**

6 / TYP **TYP REINFORCING @ WALL INTERSECTION DETAIL**
NOT TO SCALE

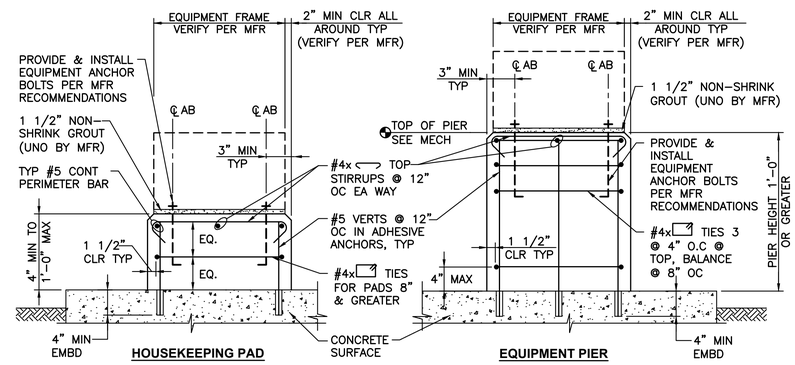

7 / TYP **TYP HOUSEKEEPING PAD & EQUIPMENT PIER DETAILS**
NOT TO SCALE

NOTES:

1. CHAMFER ALL EXPOSED CORNERS OF HOUSEKEEPING PADS AND EQUIPMENT PIERS.

2. FOR PIER HEIGHT LESS THAN 1'–0" SEE HOUSEKEEPING PAD DETAIL

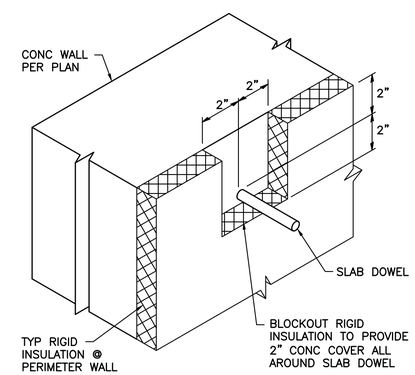

8 / TYP **TYP CONCRETE COVER @ SLAB REINF & INSULATION DETAIL**
NOT TO SCALE

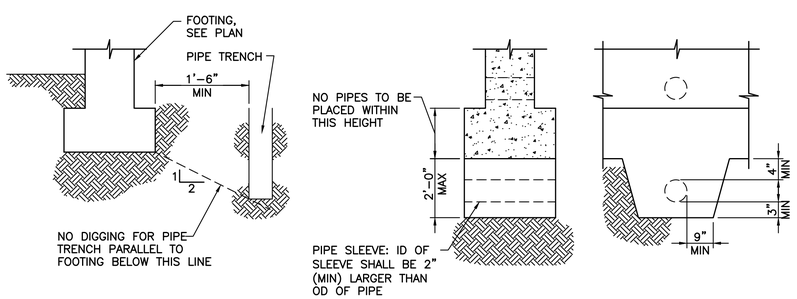

NOTES:

1. SEE NOTES ON FOUNDATION PLAN FOR ADDITIONAL INFORMATION.

2. PIPE & CONDUIT MUST RUN PERPENDICULAR THRU FOUNDATION WALL.

9 / TYP **TYP FTG @ PIPE OR CONDUIT DETAIL**
NOT TO SCALE

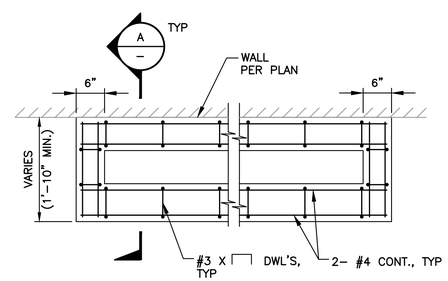

REINFORCEMENT PLACEMENT PLAN
NOT TO SCALE

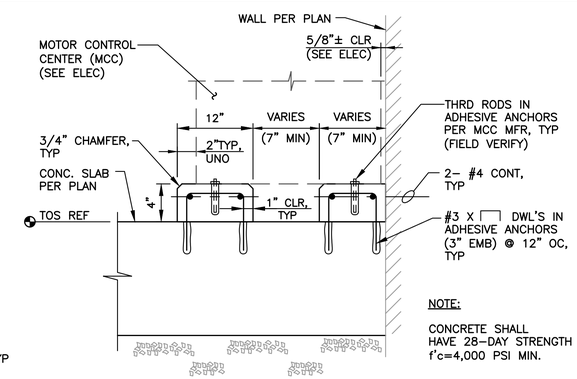

NOTE:

CONCRETE SHALL
HAVE 28–DAY STRENGTH
f'c=4,000 PSI MIN.

A / – **SECTION**
NOT TO SCALE

10 / TYP **TYP MCC HOUSEKEEPING PAD DETAIL**
NOT TO SCALE

0 1" 2"
TWO INCHES AT FULL SCALE.
IF NOT, SCALE ACCORDINGLY

Gray & Osborne, Inc.
CONSULTING ENGINEERS
1130 RAINIER AVENUE SOUTH, SUITE 300
SEATTLE, WASHINGTON 98144

DATE: SEPT 2022
DRAWN: RAH
CHECKED: ZK
APPROVED: MJB

No.	REVISION	DATE	APPD

MARTIN J. BASSEN
STATE OF WASHINGTON
45878
REGISTERED PROFESSIONAL ENGINEER
9/22/2022

CITY OF LACEY
THURSTON COUNTY WASHINGTON
BEACHCREST WELLFIELD pH IMPROVEMENTS
TYPICAL DETAILS

SHEET: S-3
SHEET: 38 of 81
JOB NO.: 19520
DWG:S_STND

L:\LACEY\19520 pH Predesign and S17 Facilities Design\PLANSET\S-Sheets\S_STND.dwg, 9/21/2022 1:36 PM, PHILIP MARSHALL

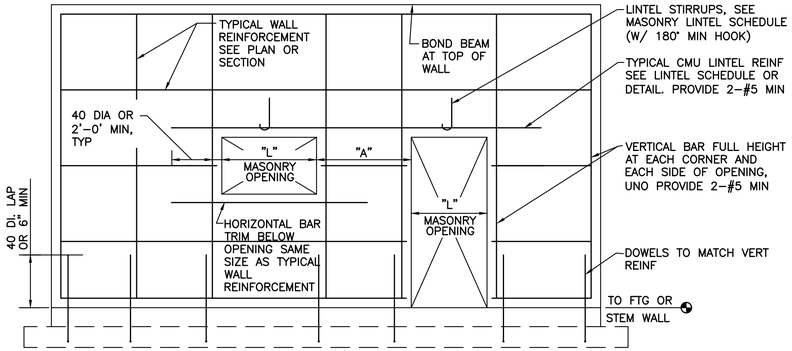

NOTES:

1. WHERE DISTANCE "A" IS BETWEEN 1'-4" AND 2'-0", PROVIDE #3 TIES AT 8" OC FULL HEIGHT OF THE SMALLER OF THE TWO OPENINGS.
2. DISTANCE "A" SHALL NOT BE LESS THAN 1'-4".
3. PROVIDE CONTINUOUS BOND BEAM W/2-#5 MIN AT ALL LEDGERS, UNO
4. SEE CMU WALL CONTROL JOINT DETAIL AND PLAN FOR LOCATION.

1 / TYP **TYPICAL CMU WALL REINFORCEMENT PLACEMENT**
NOT TO SCALE

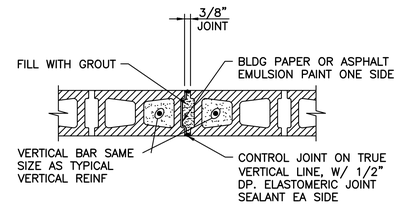

PLAN

NOTES:

1. BOND BEAM BARS TO BE CONTINUOUS THROUGH JOINT.
2. MAXIMUM SPACING: 30'-0" OC UNLESS NOTED OTHERWISE.
3. MASONRY CONTROL JOINT SHALL NOT BE LOCATED CLOSER THAN 5'-0" TO JAMB.

2 / TYP **TYP CMU WALL CONTROL JOINT DETAIL**
NOT TO SCALE

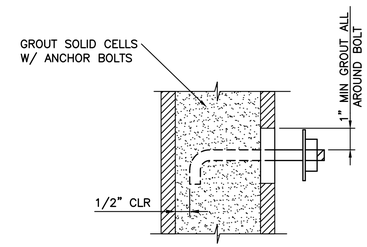

3 / TYP **TYP CMU WALL ANCHOR BOLT DETAIL**
NOT TO SCALE

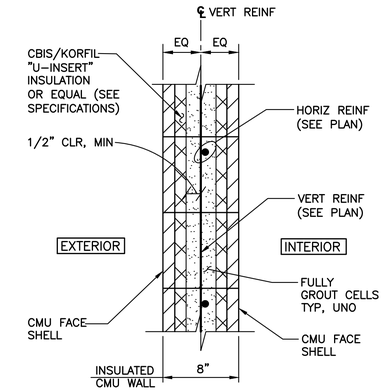

4 / TYP **TYPICAL 8" INSULATED CMU WALL DETAIL**
SCALE:1 1/2"=1'-0"

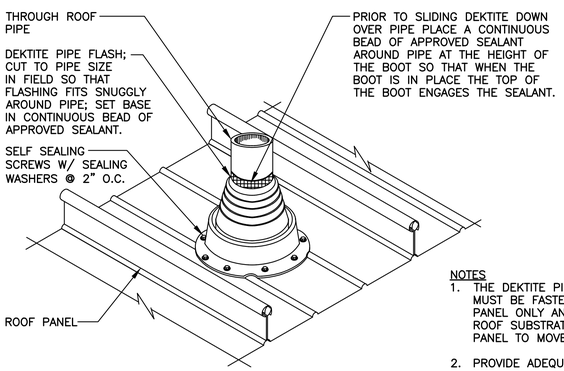

NOTES

1. THE DEKTITE PIPE FLASHING MUST BE FASTENED TO THE PANEL ONLY AND NOT INTO THE ROOF SUBSTRATE TO ALLOW TO PANEL TO MOVE THERMALLY.
2. PROVIDE ADEQUATE CLEARANCE BETWEEN THE PIPE AND PANEL.

5 / TYP **TYP PIPE PENETRATION THROUGH ROOF DETAIL**
NOT TO SCALE

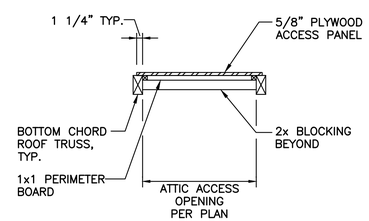

6 / TYP **TYPICAL ATTIC ACCESS DETAIL**
SCALE: 3/4"=1'-0"

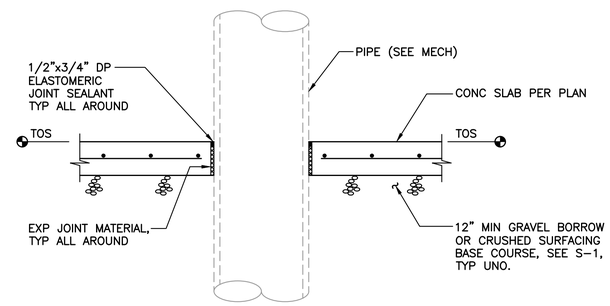

7 / TYP **TYPICAL PIPE PENETRATION DETAIL**
NOT TO SCALE

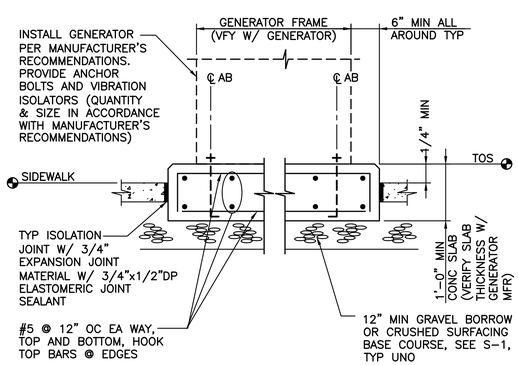

8 / TYP **TYP GENERATOR PAD DETAIL**
NOT TO SCALE

0 1" 2"
TWO INCHES AT FULL SCALE. IF NOT, SCALE ACCORDINGLY

Gray & Osborne, Inc.
CONSULTING ENGINEERS
1130 RAINIER AVENUE SOUTH, SUITE 300
SEATTLE, WASHINGTON 98144

DATE: SEPT 2022	DRAWN: RAH
CHECKED: ZK	APPROVED: MJB

No.	REVISION	DATE	APPD

MARTIN J. BASHEN — STATE OF WASHINGTON — 46538 — REGISTERED PROFESSIONAL ENGINEER — 9/22/2022

CITY OF LACEY
THURSTON COUNTY WASHINGTON
BEACHCREST WELLFIELD pH IMPROVEMENTS
TYPICAL DETAILS

SHEET: **S-4**
SHEET: **39 of 81**
JOB NO.: 19520
DWG:S_STND

L:\LACEY\19520 pH Predesign and S17 Facilities Design\PLANSET\S-Sheets\S_STND.dwg, 9/21/2022 1:36 PM, PHILIP MARSHALL

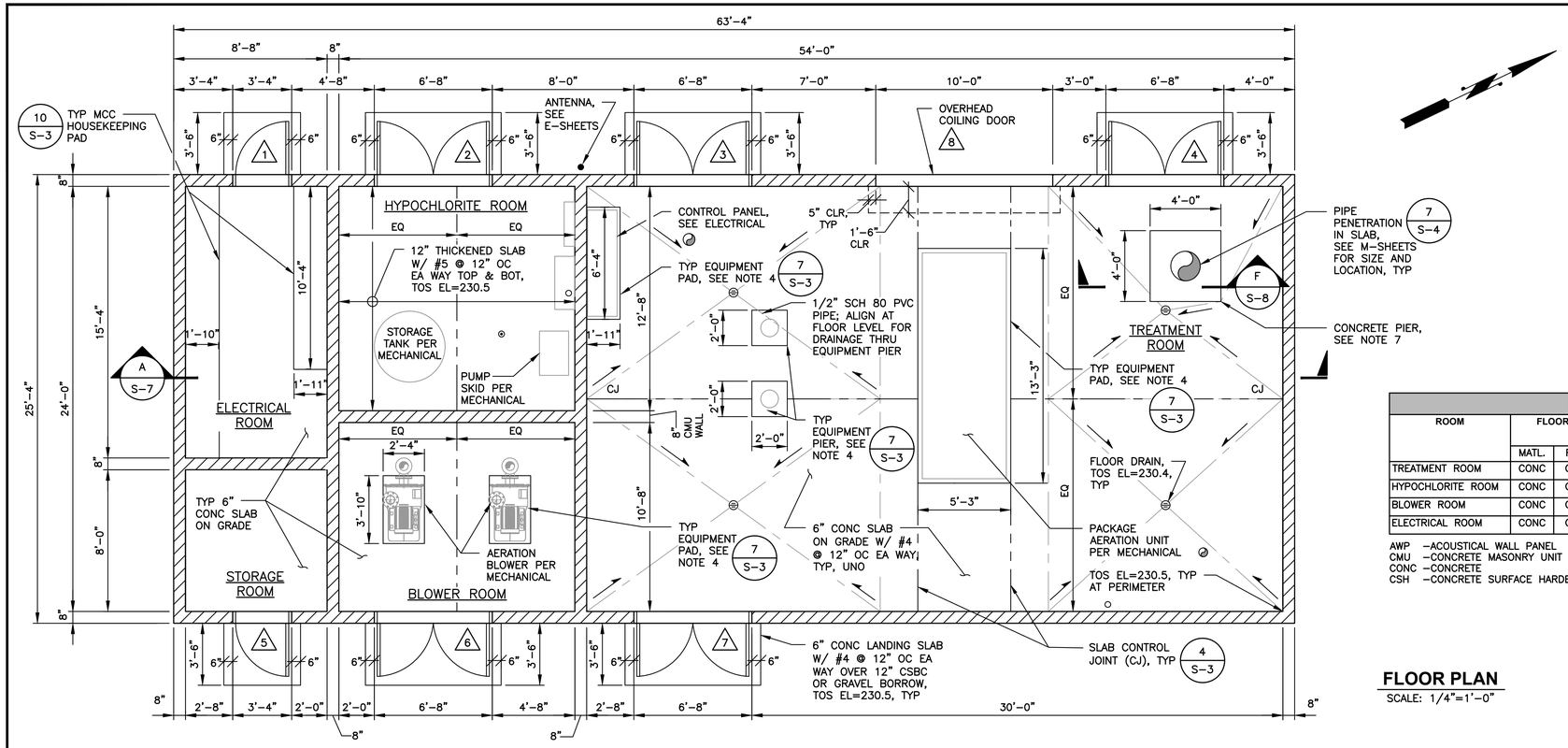

FLOOR PLAN

SCALE: 1/4"=1'-0"

ROOM MATERIAL AND FINISH SCHEDULE												
ROOM	FLOOR		WALLS								CEILING	
			NORTH		SOUTH		EAST		WEST			
	MATL.	FIN.	MATL.	FIN.	MATL.	FIN.	MATL.	FIN.	MATL.	FIN.	MATL.	FIN.
TREATMENT ROOM	CONC	CSH	CMU	PTS	CMU	PTS	CMU	PTS	CMU	PTS	GWBM	PTS
HYPOCHLORITE ROOM	CONC	CSH	CMU	PTS	CMU	PTS	CMU	PTS	CMU	PTS	GWBM	PTS
BLOWER ROOM	CONC	CSH	CMU	AWP	CMU	AWP	CMU	AWP	CMU	AWP	GWBM	AWP
ELECTRICAL ROOM	CONC	CSH	CMU	PTS	CMU	PTS	CMU	PTS	CMU	PTS	GWBM	PTS

AWP –ACOUSTICAL WALL PANEL
CMU –CONCRETE MASONRY UNIT
CONC –CONCRETE
CSH –CONCRETE SURFACE HARDENER
GWBM –GYPSUM WALLBOARD, MOISTURE RESISTANT
PTS –PAINT TO SPECIFICATIONS

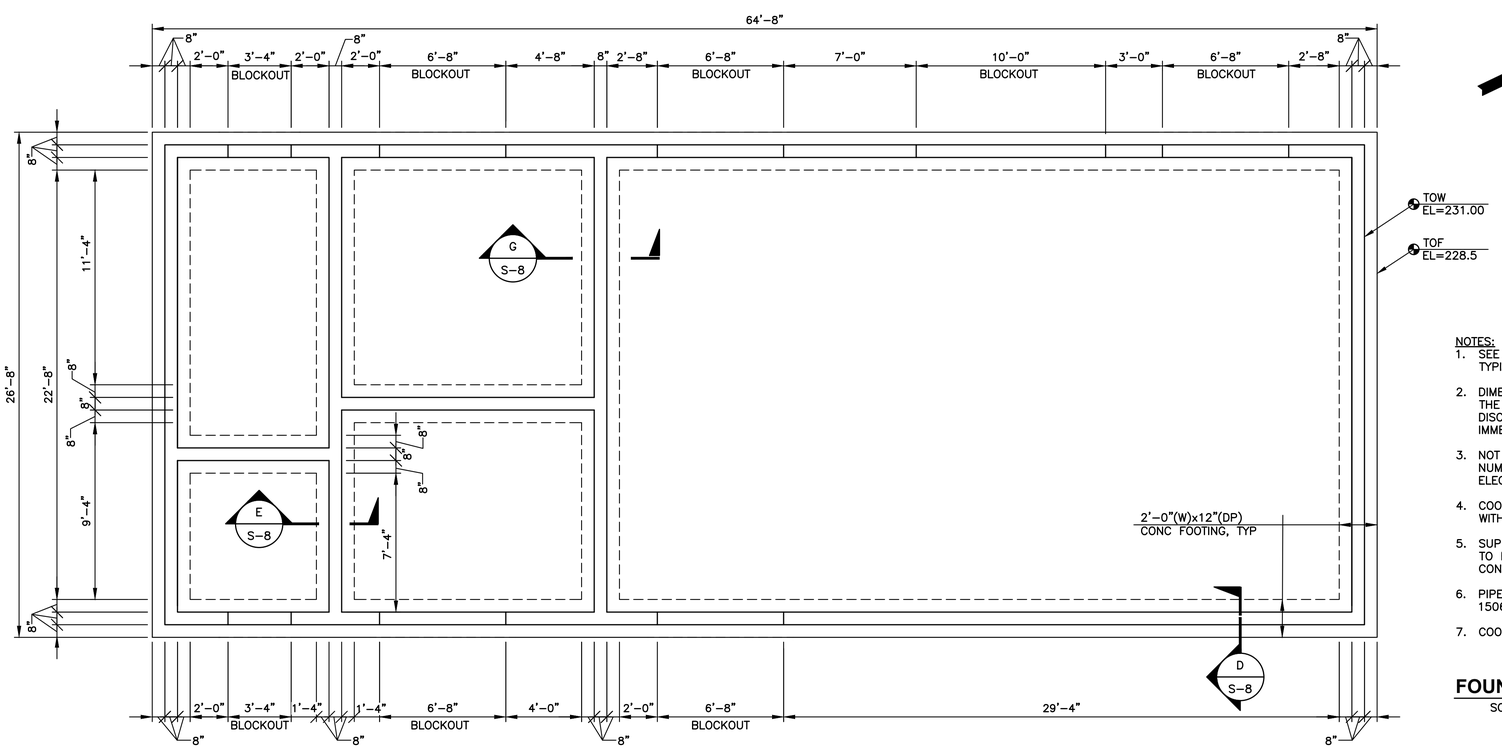

NOTES:

1. SEE SHEETS S-1 THROUGH S-4 FOR GENERAL STRUCTURAL NOTES AND TYPICAL DETAILS.
2. DIMENSIONS SHOWN ON THE STRUCTURAL PLANS SHALL BE VERIFIED BY THE CONTRACTOR PRIOR TO THE START OF CONSTRUCTION. ANY DISCREPANCIES SHALL BE BROUGHT TO THE ATTENTION OF THE ENGINEER IMMEDIATELY.
3. NOT ALL PENETRATIONS MAY BE SHOWN. CONTRACTOR SHALL VERIFY NUMBER, SIZE AND LOCATIONS OF ALL OPENINGS WITH MECHANICAL, ELECTRICAL, AND HVAC DRAWINGS.
4. COORDINATE THICKNESS AND DIMENSIONS OF THE CONCRETE PADS/PIERS WITH THE EQUIPMENT ANCHORAGE DETAILS FROM THE MANUFACTURER.
5. SUPPORTS AND BRACES FOR MECHANICAL PIPES MAY NOT BE ATTACHED TO ROOF STRUCTURE. THEY SHALL BE ATTACHED TO CMU WALL OR CONCRETE FLOOR.
6. PIPE SUPPORTS SHALL BE DESIGNED BY CONTRACTOR. SEE SECTION 15066 OF THE SPECIFICATIONS.
7. COORDINATE PIER LOCATION WITH M-SHEETS.

FOUNDATION PLAN

SCALE: 1/4"=1'-0"

0 1" 2"
TWO INCHES AT FULL SCALE. IF NOT, SCALE ACCORDINGLY

Gray & Osborne, Inc.
CONSULTING ENGINEERS
1130 RAINIER AVENUE SOUTH, SUITE 300
SEATTLE, WASHINGTON 98144

DATE: SEPT 2022
DRAWN: RAH
CHECKED: ZK
APPROVED: MJB

No.	REVISION	DATE	APPD

MYRON J. BASNEN — STATE OF WASHINGTON — REGISTERED PROFESSIONAL ENGINEER — 9/22/2022

CITY OF LACEY
THURSTON COUNTY WASHINGTON
BEACHCREST WELLFIELD pH IMPROVEMENTS
FOUNDATION AND FLOOR PLANS

SHEET: S-5
SHEET: 40 of 81
JOB NO.: 19520
DWG:S_BLDG_PLNS

L:\LACEY\19520 pH Predesign and S17 Facilities Design\PLANSET\S-Sheets\S_BLDG_PLNS.dwg, 9/21/2022 1:37 PM, PHILIP MARSHALL

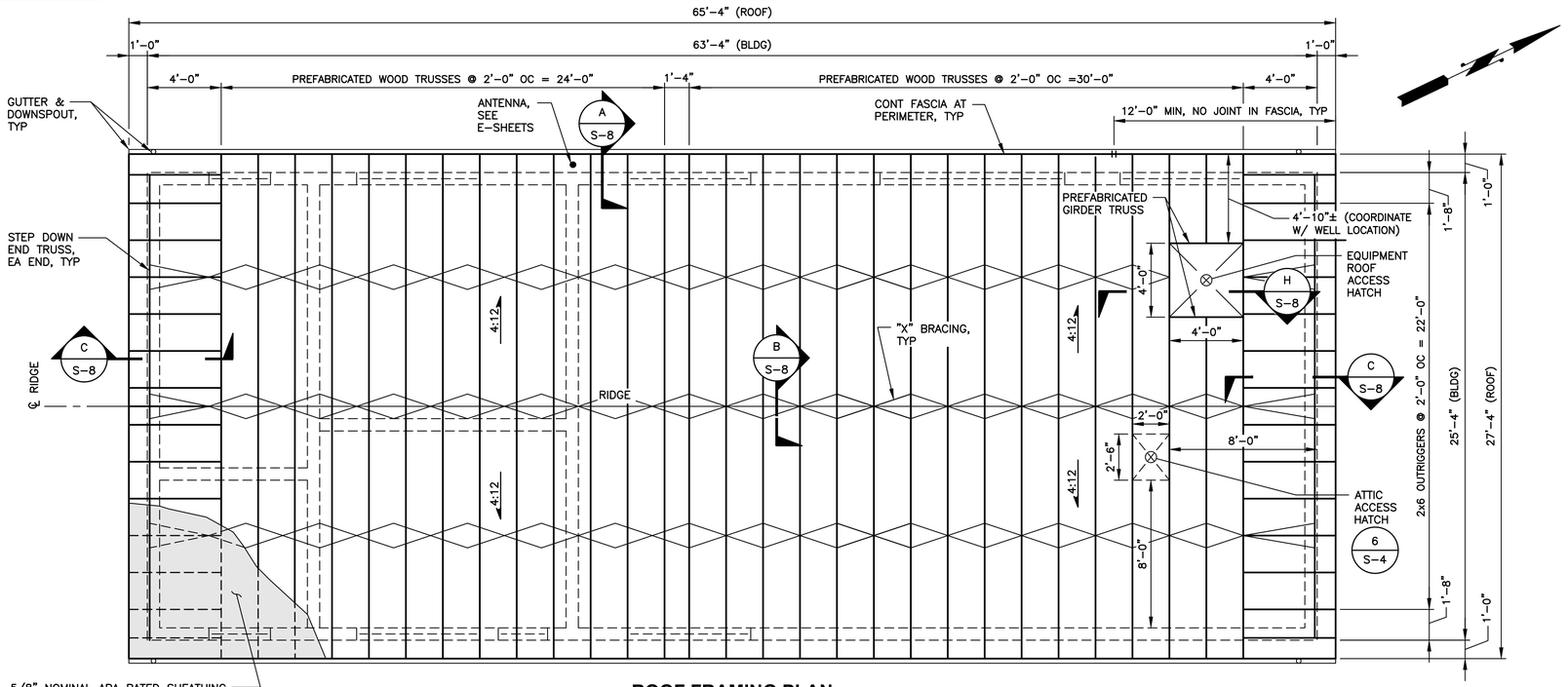

ROOF FRAMING PLAN

SCALE: 1/4"=1'-0"

5/8" NOMINAL APA RATED SHEATHING (24/0), EXPOSURE 1, W/ 10d @ 4" OC AT DIAPHRAGM BOUNDARIES, 6" OC @ SUPPORTED PANEL EDGES, AND 12" OC AT INTERMEDIATE SUPPORTS. PROVIDE SOLID 2x BLOCKING AT UNSUPPORTED PANEL EDGES.

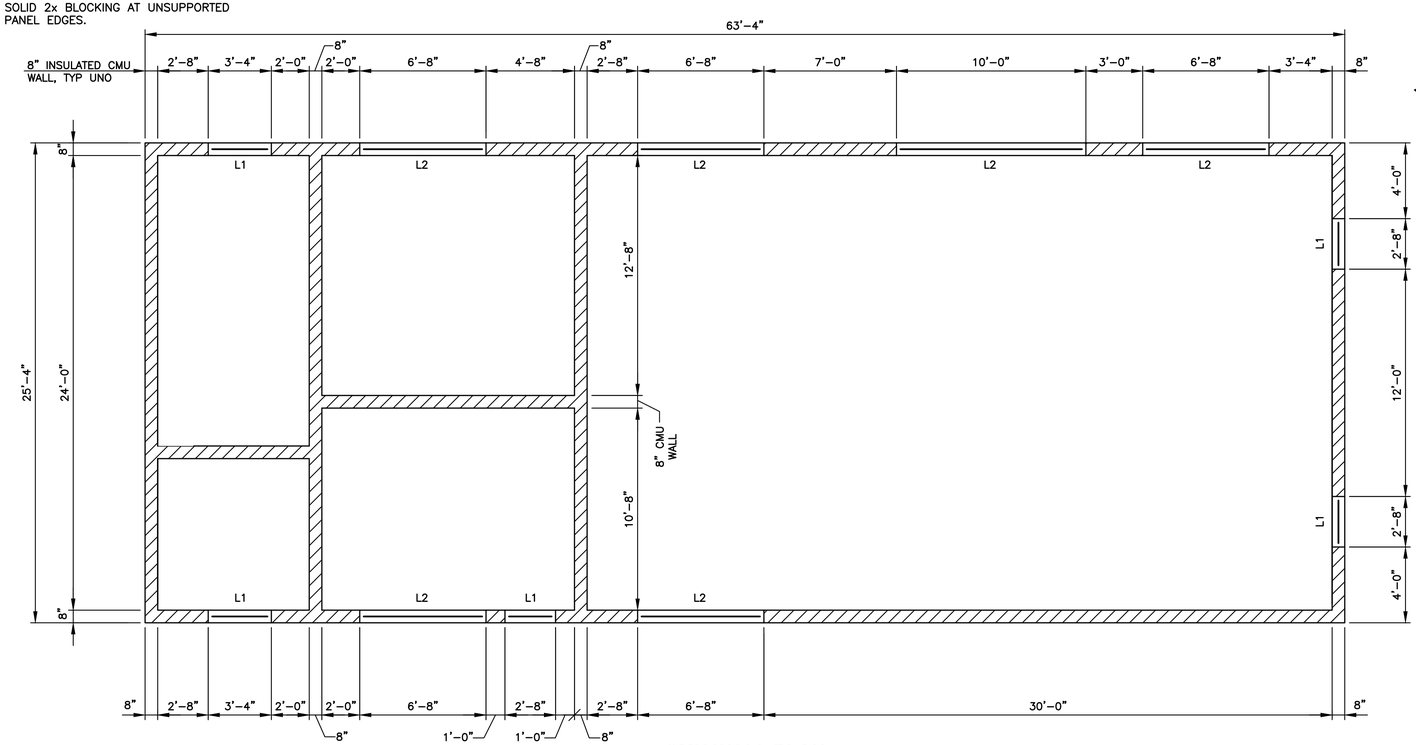

CMU WALL PLAN

SCALE: 1/4"=1'-0"

NOTES:

1. SEE SHEETS S-1 THROUGH S-4 FOR GENERAL STRUCTURAL NOTES AND TYPICAL DETAILS.
2. DIMENSIONS SHOWN ON THE STRUCTURAL PLANS SHALL BE VERIFIED BY THE CONTRACTOR PRIOR TO THE START OF CONSTRUCTION. ANY DISCREPANCIES SHALL BE BROUGHT TO THE ATTENTION OF THE ENGINEER IMMEDIATELY.
3. NOT ALL PENETRATIONS MAY BE SHOWN. CONTRACTOR SHALL VERIFY NUMBER, SIZE AND LOCATIONS OF ALL OPENINGS WITH MECHANICAL, ELECTRICAL, AND HVAC DRAWINGS.
4. SUPPORTS AND BRACES FOR MECHANICAL PIPES MAY NOT BE ATTACHED TO ROOF STRUCTURE. THEY SHALL BE ATTACHED TO CMU WALL OR CONCRETE FLOOR.

LINTEL SCHEDULE

MARK	"H" (LINTEL HT)	"B" (REINF)	MASONRY OPENINGS
L1	16" HT	#5 BOT ONLY	LESS THAN 6'-8"
L2	24" HT	#5 TOP & BOT	6'-8" AND 10'-0"

LX DENOTES CMU LINTEL TYPE. SEE TYP CMU WALL LINTEL SCHEDULE & DETAIL ON THIS SHEET.

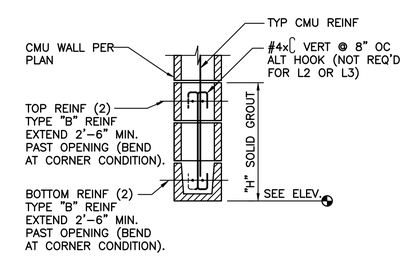

TYPICAL CMU WALL LINTEL SCHEDULE & DETAIL

1 / TYP

SCALE: 3/4"=1'-0"

0 1" 2"

TWO INCHES AT FULL SCALE. IF NOT, SCALE ACCORDINGLY

Gray & Osborne, Inc.
CONSULTING ENGINEERS
1130 RAINIER AVENUE SOUTH, SUITE 300
SEATTLE, WASHINGTON 98144

DATE: SEPT 2022
DRAWN: RAH
CHECKED: ZK
APPROVED: MJB

No.	REVISION	DATE	APPD

MYRON J. BASSEN — STATE OF WASHINGTON — REGISTERED PROFESSIONAL ENGINEER — 9/22/2022

CITY OF LACEY
THURSTON COUNTY WASHINGTON
BEACHCREST WELLFIELD pH IMPROVEMENTS
CMU WALL AND ROOF FRAMING PLANS

SHEET: S-6
SHEET: 41 of 81
JOB NO.: 19520
DWG:S_BLDG_PLNS

L:\LACEY\19520 pH Predesign and S17 Facilities Design\PLANSET\S-Sheets\S_BLDG_PLNS.dwg, 9/21/2022 1:37 PM, PHILIP MARSHALL

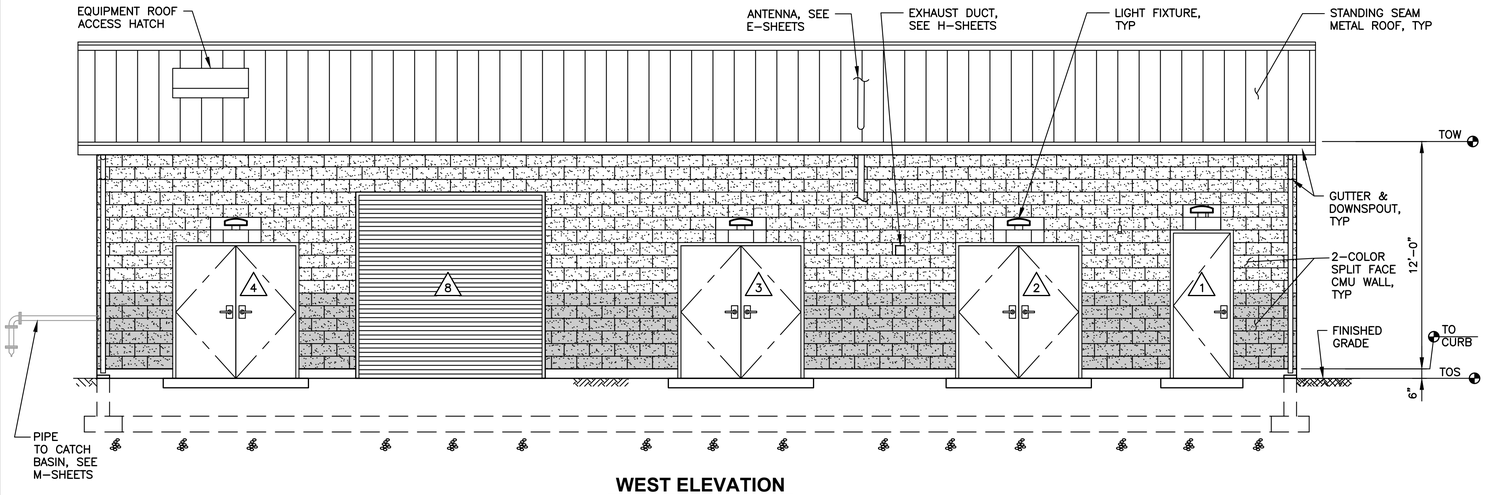

WEST ELEVATION

SCALE: 1/4"=1'-0"

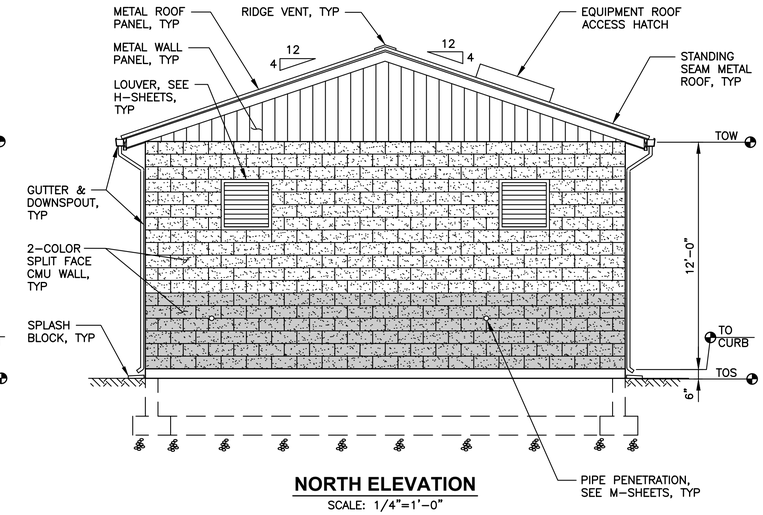

NORTH ELEVATION

SCALE: 1/4"=1'-0"

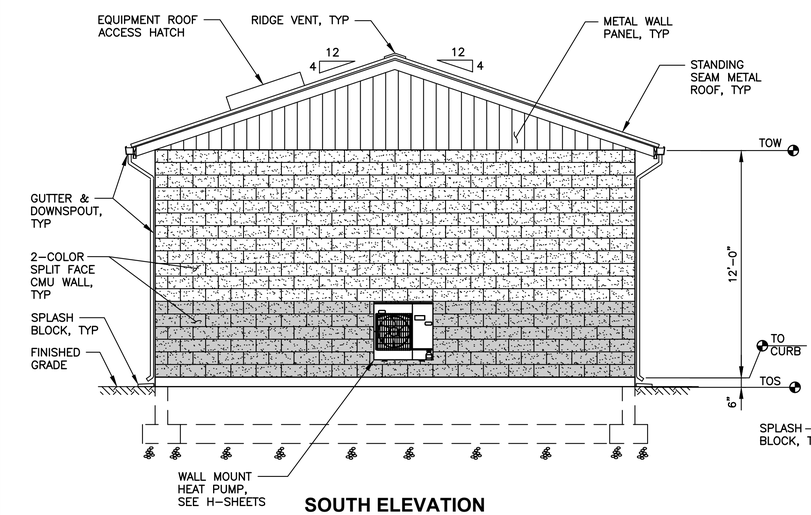

SOUTH ELEVATION

SCALE: 1/4"=1'-0"

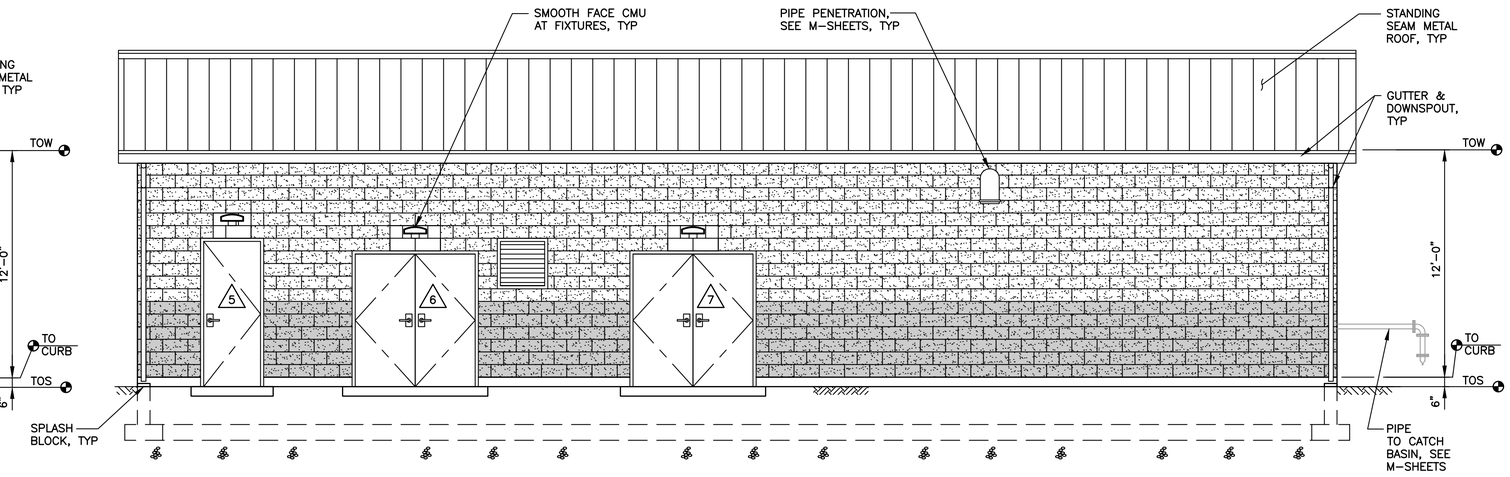

EAST ELEVATION

SCALE: 1/4"=1'-0"

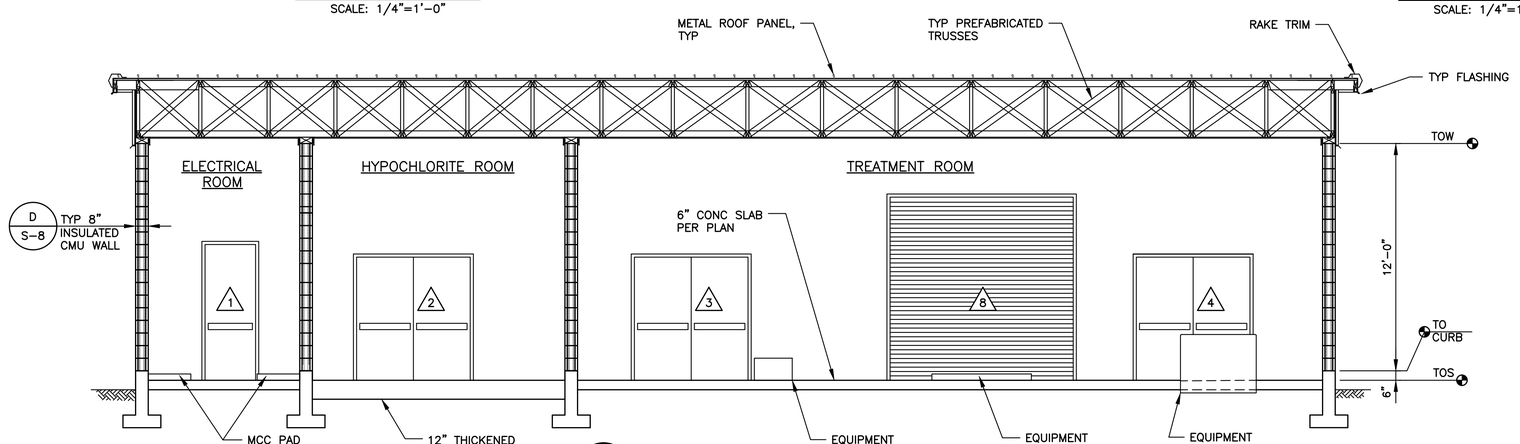

A
S-5

SECTION

SCALE: 1/4"=1'-0"

NOTES:

1. PIPING NOT SHOWN FOR CLARITY, SEE M-SHEETS.
2. SUPPORTS AND BRACES FOR MECHANICAL PIPES MAY NOT BE ATTACHED TO ROOF STRUCTURE. THEY SHALL BE ATTACHED TO CMU WALL OR CONCRETE FLOOR.
3. NOT ALL PENETRATIONS MAY BE SHOWN. CONTRACTOR SHALL VERIFY NUMBER, SIZE AND LOCATIONS OF ALL OPENINGS WITH MECHANICAL, ELECTRICAL, AND HVAC DRAWINGS.

0 1" 2"

TWO INCHES AT FULL SCALE. IF NOT, SCALE ACCORDINGLY

Gray & Osborne, Inc.
CONSULTING ENGINEERS
1130 RAINIER AVENUE SOUTH, SUITE 300
SEATTLE, WASHINGTON 98144

DATE: SEPT 2022	
DRAWN:	RAH
CHECKED:	ZK
APPROVED:	MJB

No.	REVISION	DATE	APPD

MIRON J. BASHEN
STATE OF WASHINGTON
PROFESSIONAL ENGINEER
9/22/2022

CITY OF LACEY
THURSTON COUNTY WASHINGTON
BEACHCREST WELLFIELD pH IMPROVEMENTS
ELEVATIONS

SHEET: S-7

JOB NO.: 19520

DWG:S_BLDG_PLNS

L:\LACEY\19520 pH Predesign and S17 Facilities Design\PLANSET\S-Sheets\S_BLDG_PLNS.dwg, 9/21/2022 1:37 PM, PHILIP MARSHALL

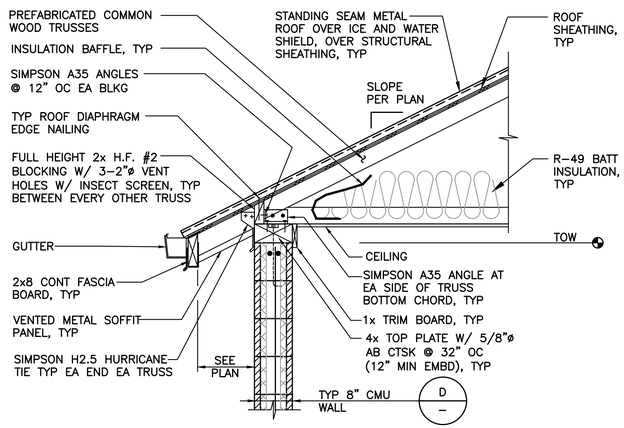

A / S-6 **SECTION**
SCALE: 3/4"=1'-0"

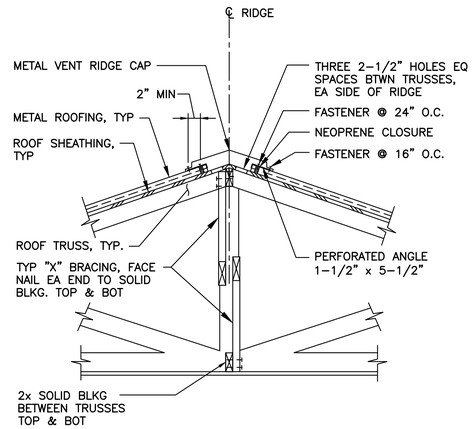

B / S-6 **SECTION**
SCALE: 3/4"=1'-0"

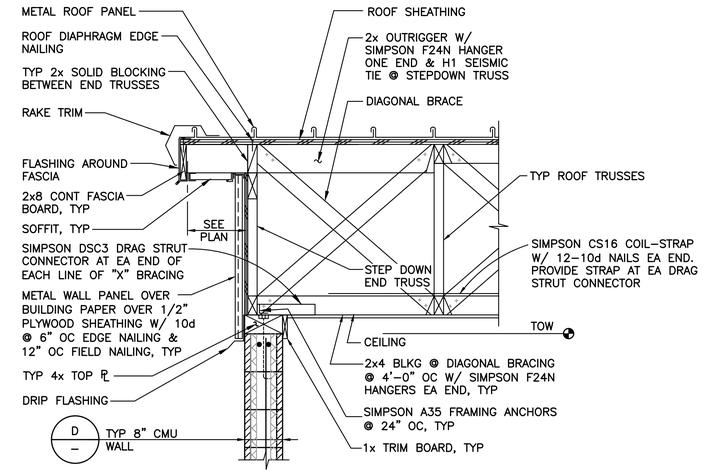

C / S-6 **SECTION**
SCALE: 3/4"=1'-0"

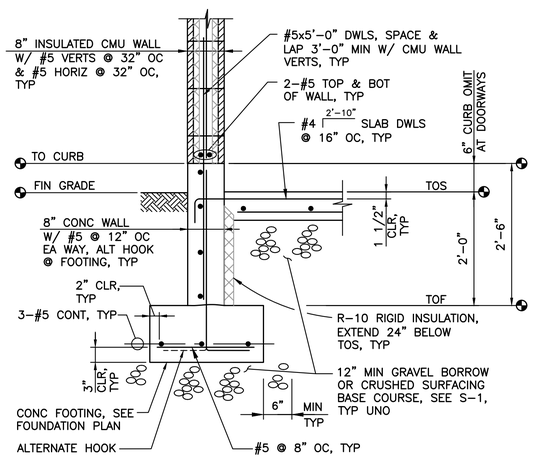

D / S-5 **SECTION**
SCALE: 3/4"=1'-0"

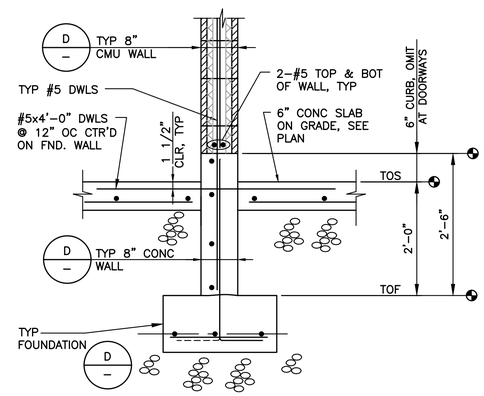

E / S-5 **SECTION**
SCALE: 3/4"=1'-0"

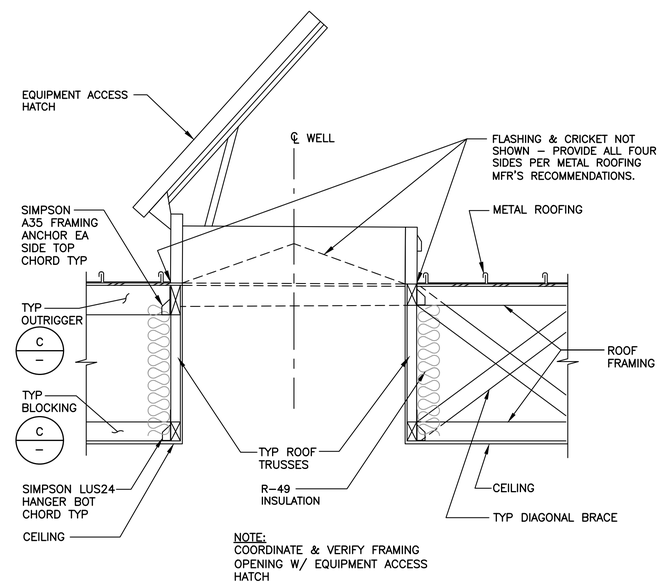

H / S-6 **SECTION**
SCALE: 3/4"=1'-0"

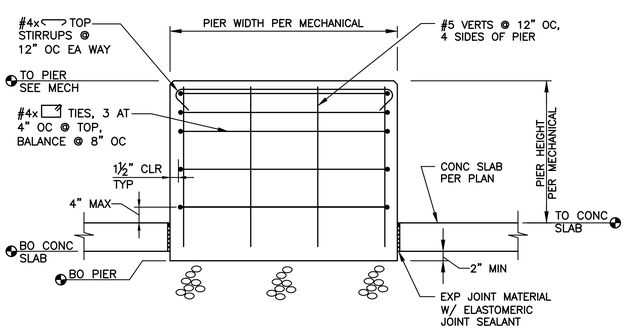

F / S-5 **SECTION**
SCALE: 3/4"=1'-0"

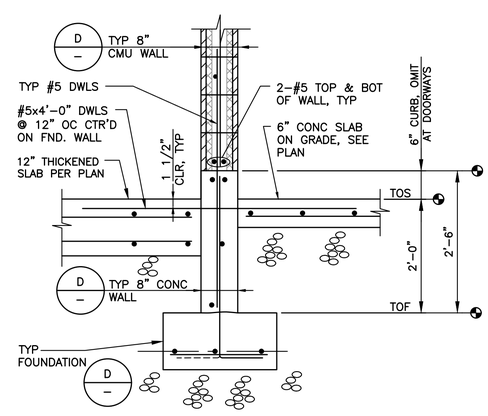

G / S-5 **SECTION**
SCALE: 3/4"=1'-0"

0 1" 2"
TWO INCHES AT FULL SCALE. IF NOT, SCALE ACCORDINGLY

Gray & Osborne, Inc.
CONSULTING ENGINEERS
1130 RAINIER AVENUE SOUTH, SUITE 300
SEATTLE, WASHINGTON 98144

DATE: SEPT 2022	
DRAWN: RAH	
CHECKED: ZK	
APPROVED: MJB	

No.	REVISION	DATE	APPD

MYRON J. BASDEN, STATE OF WASHINGTON, REGISTERED PROFESSIONAL ENGINEER
9/22/2022

CITY OF LACEY
THURSTON COUNTY WASHINGTON
BEACHCREST WELLFIELD pH IMPROVEMENTS
DETAILS

SHEET: **S-8**
SHEET: **43 of 81**
JOB NO.: 19520
DWG:S_BLDG_PLNS

L:\LACEY\19520 pH Predesign and S17 Facilities Design\PLANSET\S-Sheets\S_BLDG_PLNS.dwg, 9/21/2022 1:37 PM, PHILIP MARSHALL

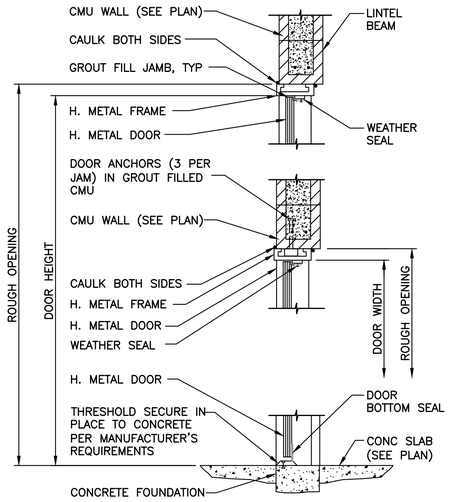

1 TYP **TYP DOOR DETAIL**
NTS

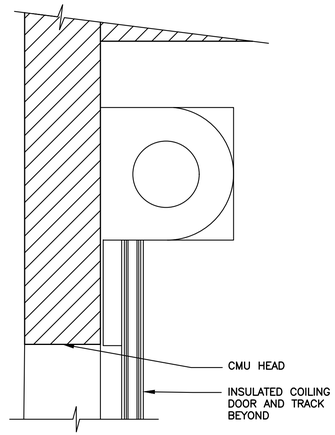

2 TYP **COILING DOOR HEAD**
SCALE: 1 1/2"=1'-0"

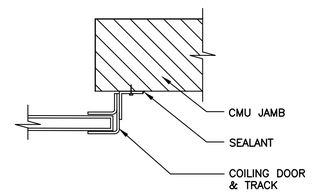

3 TYP **COILING DOOR JAMB**
SCALE: 1 1/2"=1'-0"

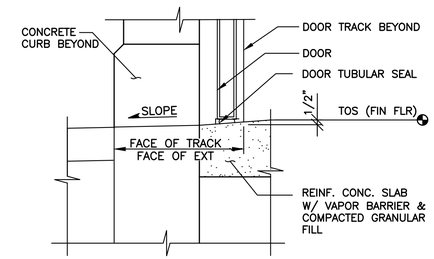

4 TYP **COILING DOOR THRESHOLD**
SCALE: 1 1/2"=1'-0"

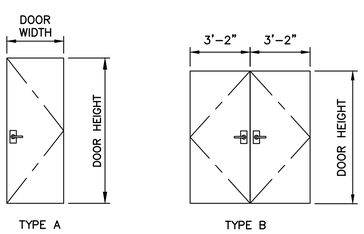

DOOR TYPE
NTS

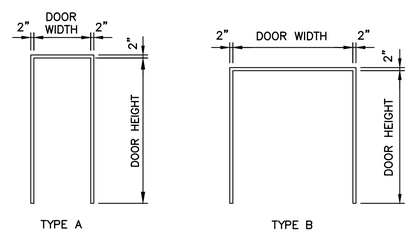

DOOR FRAME TYPE
NTS

DOOR SCHEDULE

NO.	MATERIAL & TYPE	DOOR SIZE: WIDTH x HEIGHT x THICKNESS	DOOR TYPE	FRAME TYPE	FRAME GAUGE	FINISH	HARDWARE GROUP	INSTALLATION FACTOR
1	HOLLOW METAL INSULATED	3'-0" x 7'-8" x 1 3/4"	A	A	16	PTS	2	U=0.35
2	HOLLOW METAL INSULATED	6'-4" x 7'-0" x 1 3/4"	B	B	16	PTS	1	U=0.35
3	HOLLOW METAL INSULATED	6'-4" x 7'-0" x 1 3/4"	B	B	16	PTS	1	U=0.35
4	HOLLOW METAL INSULATED	6'-4" x 7'-0" x 1 3/4"	B	B	16	PTS	1	U=0.35
5	HOLLOW METAL INSULATED	3'-0" x 7'-8" x 1 3/4"	A	A	16	PTS	2	U=0.35
6	HOLLOW METAL INSULATED	6'-4" x 7'-0" x 1 3/4"	B	B	16	PTS	1	U=0.35
7	HOLLOW METAL INSULATED	6'-4" x 7'-0" x 1 3/4"	B	B	16	PTS	1	U=0.35
8	OVERHEAD COILING DOOR	10'-0" x 9'-8"	N/A	BY MFG	BY MFG	FAC	3	R=7.7

PTS – PAINT TO SPECIFICATIONS
FAC – FACTORY

0 1" 2"
TWO INCHES AT FULL SCALE.
IF NOT, SCALE ACCORDINGLY

Gray & Osborne, Inc.
CONSULTING ENGINEERS
1130 RAINIER AVENUE SOUTH, SUITE 300
SEATTLE, WASHINGTON 98144

DATE: SEPT 2022
DRAWN: RAH
CHECKED: ZK
APPROVED: MJB

No.	REVISION	DATE	APPD

MITCHELL J. BASHEN
STATE OF WASHINGTON
48358
REGISTERED PROFESSIONAL ENGINEER
9/22/2022

CITY OF LACEY
THURSTON COUNTY WASHINGTON
BEACHCREST WELLFIELD pH IMPROVEMENTS
DETAILS

SHEET: S-9
SHEET: 44 of 81
JOB NO.: 19520
DWG:S_BLDG_PLNS

L:\LACEY\19520 pH Predesign and S17 Facilities Design\PLANSET\S-Sheets\S_BLDG_PLNS.dwg, 9/21/2022 1:37 PM, PHILIP MARSHALL

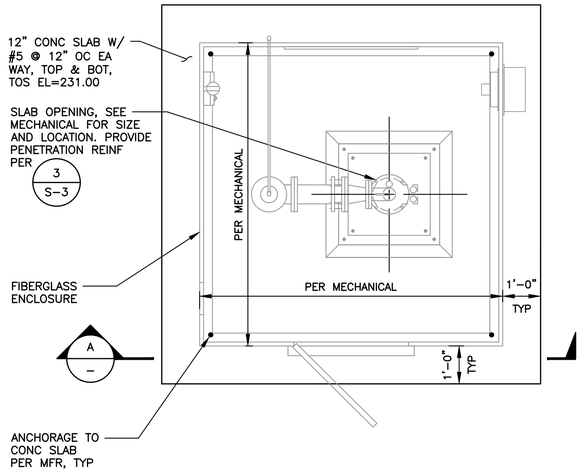

S16 BUILDING CONCRETE PAD PLAN

SCALE: 1/2"=1'-0"

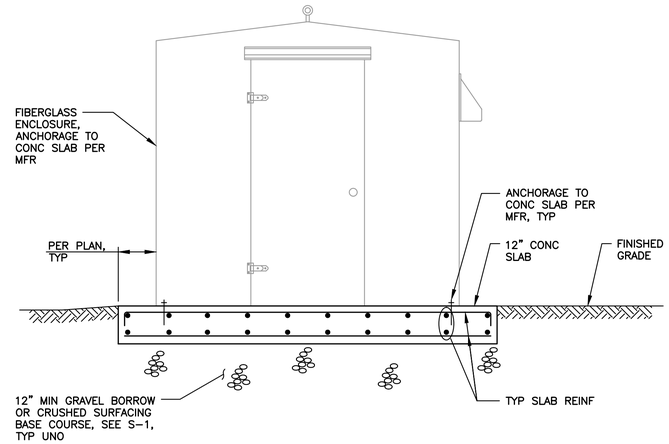

A
–

SECTION

SCALE: 1/2"=1'-0"

0 1" 2"

TWO INCHES AT FULL SCALE.
IF NOT, SCALE ACCORDINGLY

Gray & Osborne, Inc.
CONSULTING ENGINEERS
1130 RAINIER AVENUE SOUTH, SUITE 300
SEATTLE, WASHINGTON 98144

DATE: SEPT 2022	
DRAWN:	RAH
CHECKED:	ZK
APPROVED:	MJB

No.	REVISION	DATE	APPD

MYRON J. BASDEN
STATE OF WASHINGTON
STATE REGISTERED
PROFESSIONAL ENGINEER
9/22/2022

CITY OF LACEY
THURSTON COUNTY WASHINGTON
BEACHCREST WELLFIELD pH IMPROVEMENTS
S16 BUILDING CONCRETE PAD PLAN AND SECTION

SHEET: **S-10**
SHEET: **45 of 81**
JOB NO.: 19520
DWG:S_BLDG_PLNS

L:\LACEY\19520 pH Predesign and S17 Facilities Design\PLANSET\S-Sheets\S_BLDG_PLNS.dwg, 9/21/2022 1:37 PM, PHILIP MARSHALL

ABBREVIATIONS

A	AMPERE (AMP)
AC	ALTERNATING CURRENT
AF	BREAKER FRAME SIZE (IN AMPS)
AI	ANALOG INPUT
AIC	AMPERES–INTERRUPTING CAPACITY
AL	ALUMINUM
AM	AMMETER
AO	ANALOG OUTPUT
AT	BREAKER TRIP (SETTING IN AMPS)
ATS	AUTOMATIC TRANSFER SWITCH
AWG	AMERICAN WIRE GAUGE
BATT	BATTERY
BKR	BREAKER
CP	CONTROL PANEL
CPT	CONTROL POWER TRANSFORMER
CST	CONTROL STATION
CT	CURRENT TRANSFORMER
CU	COPPER
DC	DIRECT CURRENT
DI	DISCRETE INPUT
DIST	DISTRIBUTION
DO	DISCRETE OUTPUT
DTWV	DISCHARGE–TO–WASTE VALVE
EIOM	EXTENDED I/O MODULE
ETC	ELAPSED TIME/COUNTER METER
ETM	ELAPSED TIME METER
ENCL	ENCLOSURE
EXIST	EXISTING
FDR	FEEDER
FLA	FULL LOAD AMPS
FU	FUSE
FVNR	FULL VOLTAGE NON REVERSING
FVR	FULL VOLTAGE REVERSING
FY	FLOW COMPUTATION
G	GROUND CONDUCTOR
GEC	GROUNDING ELECTRODE CONDUCTOR
GFCI	GROUND FAULT CIRCUIT INTERRUPTER
GND	GROUND
H	HORN
HA	HAND–AUTO
HIM	HUMAN INTERFACE MODULE
HMI	HUMAN MACHINE INTERFACE
HOA	HAND–OFF–AUTO
HOR	HAND–OFF–REMOTE
HP	HORSEPOWER
JCXXX	JUNCTION BOX, CONTROL
JPXXX	JUNCTION BOX, POWER
JSXXX	JUNCTION BOX, SIGNAL
kA	KILOAMPERES
kAIC	KILOAMPERES–INTERRUPTING CAPACITY
KCM	THOUSAND CIRCULAR MILLS
kV	KILOVOLT
kVA	KILOVOLT–AMPERE
kVAh	KILOVOLT–AMPERE HOUR
kVAR	KILOVAR (REACTIVE KILOVOLT–AMPERE)
KVArh	KILOVAR–HOUR
kW	KILOWATT
kWh	KILOWATT–HOUR
LA	LIGHTNING ARRESTOR
LAN	LOCAL AREA NETWORK
LFMC	LIQUIDTIGHT FLEXIBLE METAL CONDUIT
LINE	POWER LINE/POWER BLOCK
LV	LOW VOLTAGE
M	MAGNETIC CONTACTOR
mA	MILLIAMPERES
MCC	MOTOR CONTROL CENTER
MCM	THOUSAND CIRCULAR MILLS
MCP	MOTOR CIRCUIT PROTECTOR
MOV	METAL OXIDE VARISTOR
MS	MOTOR STARTER
MSDS	MOTOR SAFETY DISCONNECT SWITCH
MTS	MANUAL TRANSFER SWITCH
MTU	MASTER TELEMETRY UNIT
mV	MILLIVOLT
MW	MEGAWATT
N	NEUTRAL CONDUCTOR
NEC	NATIONAL ELECTRICAL CODE
NEMA	NATIONAL ELECTRIC MANUFACTURERS ASSOC.
NESC	NATIONAL ELECTRICAL SAFETY CODE
NFPA	NATIONAL FIRE PROTECTION AGENCY
OCPD	OVERCURRENT PROTECTION DEVICE
OE	OVERHEAD ELECTRIC
OIU	OPERATOR INTERFACE UNIT
OL	OVERLOAD, THERMAL
OLR	OVERLOAD RELAY
P	POLE
PF	POWER FACTOR
PH	PHASE
PLC	PROGRAMMABLE LOGIC CONTROL
PMR	PHASE MONITOR RELAY
PMU	POWER MONITOR UNIT
POT	POTENTIOMETER
PT	POTENTIAL TRANSFORMER
PVC	POLYVINYL CHLORIDE CONDUIT
PVC–RGS	PVC COATED RGS
RGS	RIGID GALVANIZED STEEL CONDUIT
RVSS	REDUCED–VOLTAGE SOFT START
RTU	REMOTE TELEMETRY UNIT
s	SECOND
SHD	SHIELDED
SPD	SURGE PROTECTION DEVICE
SS	STAINLESS STEEL
SUSE	SUITABLE FOR USE AS A SERVICE ENTRANCE
TB	TERMINAL BLOCK
TDAD	TIME DELAY AFTER DE–ENERGIZATION
TDAE	TIME DELAY AFTER ENERGIZATION
TQS	TORQUE SWITCH
TP	TWISTED PAIR
TSP	TWISTED SHIELDED PAIR
TST	TWISTED SHIELDED TRIAD
TT	TWISTED TRIAD
T/M	THERMAL MAGNETIC
UPS	UNINTERRUPTIBLE POWER SUPPLY
V	VOLT
VA	VOLT–AMPERE
VFD	VARIABLE FREQUENCY DRIVE
VMR	VOLTAGE MONITORING RELAY
W	WATT
WAN	WIDE AREA NETWORK
Wh	WATT–HOUR
WP	WEATHER PROOF
XFMR	POWER TRANSFORMER

SYMBOL LEGEND

PLAN SYMBOLS

- CONDUIT DOWN
- CONDUIT UP
- CONDUIT STUB UP/END CAP
- DISCONNECT SWITCH
- FUSED DISCONNECT SWITCH
- COMMUNICATION OUTLET
- TELEPHONE OUTLET
- SPECIAL OUTLET
- SIMPLEX RECEPTACLE
- DUPLEX RECEPTACLE
- DUPLEX RECEPTACLE (HIDDEN)
- QUAD RECEPTACLE
- QUAD RECEPTACLE (HIDDEN)
- FLOOR MOUNTED RECEPTACLE
- SINGLE OR DUAL — LED LIGHT POLES
- #12/#10 AWG GROUND CONDUCTOR
- #12/#10 AWG NEUTRAL CONDUCTOR
- #12/#10 AWG BRANCH CONDUCTOR
- CROSSMARKS INDICATE QUANTITY AND USE OF CONDUCTORS
- S_X LIGHT SWITCH, X = 3 = 3–WAY K = KEY 4 = 4–WAY M = MOTION
- SEAL OFF
- (X) MOTOR X = HORSE POWER
- (XX) XX= CV CHECK VALVE
  - FE FLOW ELEMENT
  - FI FLOW INDICATOR
  - FIT FLOW INDICATOR/TRANSMITTER
  - FS FLOW SWITCH
  - FT FLOW TRANSMITTER
  - HD HEAT DETECTOR
  - IS INTRUSION SWITCH
  - J JUNCTION BOX
  - L LIMIT SWITCH
  - LE LEVEL ELEMENT
  - LI LEVEL INDICATOR
  - LIT LEVEL INDICATOR/TRANSMITTER
  - LS LEVEL SWITCH/FLOAT
  - LT LEVEL TRANSDUCER
  - MDT MOTION DETECTOR
  - MFM MAGNETIC FLOW METER
  - MOV MOTOR OPERATOR VALVE
  - PC PHOTO CELL
  - PE PRESSURE ELEMENT
  - PI PRESSURE INDICATOR
  - PIT PRESSURE INDICATOR TRANSMITTER
  - PS PRESSURE SWITCH
  - PT PRESSURE TRANSMITTER
  - SD SMOKE DETECTOR
  - SV SOLENOID VALVE
  - T THERMOSTAT

ELEMENTARY WIRING DIAGRAM SYMBOLS

- CONNECTION POINT
- TERMINAL POINT
- SCREW TERMINAL
- MOUNTED ON OUTER DOOR
- MOUNTED ON INNER DOOR
- LOCKABLE DEVICE
- NC CONTACT
- NC CONTACTOR
- NO CONTACT
- NO CONTACTOR
- SS — SOLID STATE CONTACTOR
- (ALT) — ALTERNATING RELAY
- (CR) — CONTROL RELAY
- (C) — CONTACTOR
- (C) BP — "BYPASS" CONTACTOR
- (C) IC — "ISOLATION" CONTACTOR
- (C) SS — SOLID STATE CONTACT RELAY
- (M) — MOTOR RELAY
- (TR) — TIME DELAY RELAY (TDAE)
- (TR) — TIME DELAY RELAY (TDAD)
- LIGHT EMITTING DIODE OR DIODE
- (X) — LIGHT FIXTURE X = REFERENCE LIGHTING SCHEDULE IF APPLICABLE
- L (X) — "PUSH TO TEST" LED PILOT LIGHT A = AMBER B = BLUE G = GREEN R = RED W = WHITE
- OFF ON XO OR OFF ON DX — SELECTOR SWITCHES
- HAND AUTO OFF XOO OXO OOX OR HAND OFF AUTO XOO DOX — HAND–OFF–AUTO SWITCHES
- OFF ON RESET XOO OOX — ON–OFF–RESET SWITCH

ONE LINE SYMBOLS

- CAPACITOR
- REACTOR/CHOKE
- M — CIRCUIT BREAKER, MAGNETIC ONLY
- T/M — CIRCUIT BREAKER, THERMAL–MAGNETIC
- CONNECTION POINT
- CONTACTOR
- CURRENT TRANSFORMER
- FUSE
- FUSIBLE DISCONNECT
- AM — ANALOG AMMETER
- THERMAL OVERLOAD RELAY
- GROUND EQUIPMENT/CHASSIS
- S/N — SOLID NEUTRAL
- TRANSFORMER

GENERAL SYMBOLS

- XXXXX — CONDUIT
- XX XXXX XX — TAG LABEL
- GFCI — GFCI PANELBOARD CIRCUIT
- X — AREA ID TAG
- DEMOLITION (DEMO)
- INTRINSICALLY SAFE AREA
- CLEARANCE AREA

LINETYPES

- EXPOSED CONDUIT
- UNDERGROUND (BURIED) CONDUIT
- GROUNDING ELECTRODE CONDUCTORS
- EMBEDDED CONDUIT (WALLS, CONCRETE, ETC.)

NOTE: UNLESS NOTED OTHERWISE.

NOTE:
THIS IS A GENERAL LEDGER SHEET. ALL SYMBOLS MAY NOT APPLY.

GENERAL ELECTRICAL NOTES:

SITE AND BUILDING PLANS:

1. CONDUIT ROUTING IS SHOWN SCHEMATICALLY. ACTUAL ROUTING MAY BE MORE DIRECT AND IS LEFT TO THE CONTRACTOR FOLLOWING SPECIFICATIONS 16130. NON–ELECTRICAL BURIED PIPING HAS ROUTING PRIORITY OVER ELECTRICAL BURIALS.
2. ALL TRENCHING SHALL BE PER ELECTRICAL TRENCHING DETAIL, REFERENCE ED–SHEETS.
3. THE CONTRACTOR SHALL PROTECT EXISTING UTILITIES.
4. THROUGHOUT THIS DOCUMENT, THE TERMS "DEMO", "DEMOLISH", AND "REMOVE" MEAN TO REMOVE, THEN WASTEHAUL OR RETURN TO THE OWNER, PER THE OWNER'S DIRECTION.

GENERAL CONTROL PANEL NOTES:

1. UNLESS SPECIFICALLY NOTED OTHERWISE ON THE CONTROL PANEL DETAILS, THE FOLLOWING NOTES APPLY.

   1.1 ALL ENCLOSURES SHALL BE PROVIDED WITH AN ENGRAVED NAMEPLATE CORRESPONDING TO THE ASSOCIATED TAG ID NUMBER AND TAG DESCRIPTION.

   TAG DESCRIPTION — 1/4" TEXT
   [TAG NUMBER] — 3/16" TEXT
   POWER FED BY CKT XXXX — 3/16" TEXT

   NOTE: MOTOR STARTER NAMEPLATES SHALL BE BLACK WITH WHITE LETTERING, REFERENCE MCC PANEL DOOR NAMEPLATE SCHEDULE.

   1.2 WHERE PANELS CONTAIN POWER FROM MULTIPLE SOURCES, PROVIDE A YELLOW SAFETY STICKER, APPROXIMATELY 2" x 3", AS SHOWN BELOW.

   CAUTION
   THIS DEVICE IS POWERED FROM SEVERAL SOURCES
   THE DISCONNECT SWITCH WILL NOT SHUT OFF ALL SOURCES OF ELECTRICAL ENERGY

INDOOR INSTALLATIONS:

1. ALL EXPOSED PORTIONS OF CONDUITS FROM UNDERGROUND SHALL BE RGS. ALL OVERHEAD CONDUITS SHALL BE RGS.
2. EXCEPT FOR INSTRUMENTATION, NON LINEAR CIRCUITS, AND INTRINSICALLY SAFE CIRCUITS ALL PORTIONS OF CONDUITS IN THE ATTIC SHALL BE RGS.
3. PANELS MOUNTED ON INTERIOR WALLS SHALL BE SUPPORTED TO THE WALL WITH 1/2–INCH (MINIMUM) GALVANIZED UNISTRUT.

PULLBOX/VAULT/OUTDOOR INSTALLATIONS:

1. ALL MOUNTING FASTENERS (NUTS, BOLTS SCREWS, WASHERS, ETC.) SHALL BE 316 STAINLESS STEEL.
2. ALL MOUNTING BRACKETS AND BRACING SHALL BE 316L STAINLESS STEEL.
3. ALL EXPOSED PORTIONS OF CONDUITS SHALL BE PVC–COATED RGS UNLESS SPECIFICALLY NOTED OTHERWISE.
4. ALL CONNECTIONS INTO ENCLOSURES SHALL BE WATERTIGHT, MADE INTO THE BOTTOM OF THE PANELS, USING MYERS–TYPE HUBS. REFERENCE SPECIFICATION 16130.
5. PANELS MOUNTED ON VERTICAL WALLS SHALL BE SUPPORTED TO THE WALL WITH 1/2–INCH (MINIMUM) 316L STAINLESS STEEL UNISTRUT.
6. ENCLOSURE SHALL INCLUDE WELDED MOUNTING TABS. HOLES SHALL NOT BE DRILLED THROUGH ENCLOSURE SURFACES FOR MOUNTING PURPOSE.

CABLE AND CONDUIT NOTES:

1. REFERENCE SPECIFICATION 16120 FOR CONDUCTORS, INSTRUMENTATION, COMMUNICATION, AND OTHER SPECIAL CABLES AND CONDUCTORS.
2. REFERENCE SPECIFICATION 16130 FOR RACEWAYS, BOXES, AND JUNCTION BOX TYPES, AND HANDHOLE, PULLBOX, AND VAULT CONDUIT INSTALLATION METHODS.
3. CONDUIT NUMBERS ARE FORMATTED AS:

   TAANN(S) WHERE: T = TYPE (P=POWER; C=CONTROL; S=SIGNAL/INSTRUMENTATION)
   AA= AREA NUMBER (01–99)
   NN= CONDUIT NUMBER WITHIN THE AREA (01–99)
   S = SPARE CONDUIT (~ "TILDE") (IF APPLICABLE)

   P0319~ = AREA 03 POWER CONDUIT NO. 19, SPARE
   C0112 = AREA 01 CONTROL CONDUIT NO. 12
   S0521~ = AREA 05 INSTRUMENTATION CONDUIT NO. 21, SPARE

4. CABLE AND CONDUIT SCHEDULES:

   4.1. THE CABLE AND CONDUIT SCHEDULE PROVIDES CONDUIT NUMBER, SOURCE, DESTINATION, AND SIZE AS WELL AS CONDUCTOR AND CABLE REQUIREMENTS. REFERENCE SPECIFICATION 16130 FOR CONDUIT COMPOSITION AND COATING.

   4.2. CONDUITS MARKED WITH "* n" (WHERE n = 1, 2, OR 3) SHALL BE 100% CONTINUOUS PER SPECIFICATION 16130.

   SPECIFICALLY, CONDUITS MARKED WITH:

   "* 1" DENOTE NON LINEAR POWER CIRCUITS. IF THESE CONDUITS ENTER A PULLBOX, THEN THEY MUST CONNECT TO A "TYPE 1" J–BOX INSIDE THE PULLBOX.

   "* 2" NOT USED.

   "* 3" DENOTE INSTRUMENTATION CIRCUITS THAT ARE NOT INTRINSICALLY SAFE. IF THESE CONDUITS ENTER A PULLBOX, THEN THEY MUST CONNECT TO A "TYPE 3" J–BOX INSIDE THE PULLBOX.

5. REGARDLESS OF THE TYPE OF CONDUIT BEING ROUTED TO A MOTOR OR INSTRUMENT, THE LAST 18 INCHES OF THE CONDUIT CONNECTING TO THE MOTOR OR INSTRUMENT SHALL BE LFMC.

READING ELECTRICAL SHEETS:

ELEMENTARY DIAGRAMS:

1. ELEMENTARY DIAGRAMS ARE SHOWN IN LADDER LOGIC FORM WITH LINE NUMBERS FORMATTED AS:

   SS.LL WHERE SS = SHEET NUMBER AND LL = LINE NUMBER

2. RELAY COIL "TYPES" ARE INDICATED INSIDE THE COIL SYMBOL AS PER THE SYMBOL SCHEDULE ON THIS SHEET. THE COIL NUMBER IS OF THE FORMAT:

   TTSS.LL.AA WHERE TT = RELAY TYPE (PER SYMBOL SCHEDULE)
   SS.LL = AS DESCRIBED ABOVE
   AA = ASSOCIATION WITH A DRIVE, CONTROLLER, CONTROL PANEL, ETC.

3. RELAY CONTACTS ARE NUMBERED IN ASSOCIATION WITH THEIR COILS FOLLOWED BY "–X" WHERE X IS THE CONTACT POLE NUMBER.

   EXAMPLE: RELAY CONTACTS FOR A DPDT RELAY

POLE NUMBER	N.O. CONTACT REFERENCE	N.C. CONTACT REFERENCE
1:	12.40	NA\
2:	13.04	13.05\

   LINE NUMBER
   SHEET NUMBER

   N.O. = NORMALLY OPEN CONTACT
   N.C. = NORMALLY CLOSED CONTACT.

4. CONTACTS AND ANALOG SIGNALS CONNECTED TO PLC I/O ARE FORMATTED AS:

   *RR:SS:CC WHERE * DENOTES A PLC I/O CONNECTION
   RR = PLC RACK NUMBER
   SS = RACK SLOT NUMBER
   CC = SLOT CHANNEL NUMBER

   *TT:CC WHERE * DENOTES A PLC I/O CONNECTION
   TT = I/O TYPE:
   AI = ANALOG INPUT
   AO = ANALOG OUTPUT
   DI = DIGITAL INPUT
   DO = DIGITAL OUTPUT
   CC = EMBEDDED CHANNEL NUMBER

PANELBOARD CIRCUIT ASSIGNMENTS:

1. LIGHTING FIXTURES AND RECEPTACLES ARE SHOWN WITH THEIR PANELBOARD CIRCUIT BREAKER NUMBER FOLLOWING THE FORMAT BELOW:

   PANELBOARD TAG (EX: [01 PB 02])
   CKT 02–02, 04, 06
   3rd CIRCUIT BREAKER POSITION NUMBER (3 POLE)
   2nd CIRCUIT BREAKER POSITION NUMBER (2 POLE)
   1st CIRCUIT BREAKER POSITION NUMBER

PLCS:

1. REFERENCE CONTROL PANEL SPECIFICATION 16940.
2. WIRE ALL PLC ANALOG AND DIGITAL INPUTS AND OUTPUTS, WHETHER ASSIGNED OR SPARE, TO TERMINAL GROUPS PER SPECIFICATION.
3. ALL PLC DIGITAL OUTPUTS SHALL BE BUFFERED THROUGH INTERPOSING RELAYS. SPARE OUTPUTS, AND OUTPUTS ASSIGNED OUTSIDE THE PANEL, SHALL BE CONNECTED TO A FUSED TERMINAL PAIR.
4. N.O. OR N.C. CONTACTS FORMATTED AS *RR:SS:CC ARE DERIVED FROM PLC DIGITAL OUTPUT BUFFER RELAYS. THE RELAY CONTACT INDICATOR *RR:SS:CC INDICATES THE RELAY'S ASSOCIATED PLC DIGITAL OUTPUT RACK, SLOT, AND CHANNEL.

CONNECTIONS TO ELECTRICAL DEVICES IN VAULTS:

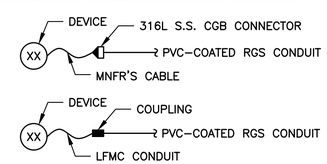

1. REFERENCE SPECIFICATION 16130.

ELECTRICAL WORK SUMMARY:

THIS SUMMARY OF ELECTRICAL WORK IS INCLUDED AS A COURTESY AND IS INTENDED TO PROVIDE A GENERAL UNDERSTANDING OF ELECTRICAL DESIGN INTENT AND MAJOR ELECTRICAL CONSTRUCTION TASKS. IT IS NOT PROVIDED AS A COMPLETE LIST OF WORK AND SHALL NOT BE USED FOR BIDDING PURPOSES. REFER TO ALL PLANS AND SPECIFICATIONS.

1. THE SITE EXISTING ELECTRICAL EQUIPMENT, CONDUITS, AND CONDUCTORS WILL BE DEMOLISHED AND REPLACED WITH NEW.
2. TEMPORARY ELECTRICAL POWER WILL BE REQUIRED DURING DEMOLITION AND CONSTRUCTION.
3. PROVIDE TEMPORARY POWER FOR AMP POLE DURING CONSTRUCTION AT ALL TIMES.

Gray & Osborne, Inc.
CONSULTING ENGINEERS
1130 RAINIER AVENUE SOUTH, SUITE 300
SEATTLE, WASHINGTON 98144

DATE: SEPT 2022	DRAWN: PEB
CHECKED: PAM	APPROVED: MBS

No.	REVISION	DATE	APPD

MICHAEL B. STEENEY — STATE OF WASHINGTON — 47202 — REGISTERED PROFESSIONAL ENGINEER — 9-26-22

CITY OF LACEY
THURSTON COUNTY WASHINGTON
BEACHCREST WELLFIELD pH IMPROVEMENTS
ELECTRICAL SYMBOLS, ABBREVIATIONS AND WORK SUMMARY

SHEET: E-1
SHEET: 46 of 81
JOB NO.: 19520
DWG:E_SYM_ABBR

L:\LACEY\19520 pH Predesign and S17 Facilities Design\PLANSET\E-Sheets\E_SYM_ABBR.dwg, 9/26/2022 1:19 PM, LIZ BATES

SHEET LIST

SHEET	SHEET DESCRIPTION
E-1	ELECTRICAL SYMBOLS, ABBREVIATIONS AND WORK SUMMARY
E-2	SHEET LIST AND TAG LIST
E-3	ELECTRICAL SITE PLAN
E-4	ONELINE DIAGRAM
E-5	ONELINE DIAGRAM
E-6	GROUNDING ONELINE DIAGRAM
E-7A	BUILDING S15R, SOUTH – POWER, CONTROL AND INSTRUMENTATION PLAN
E-7B	BUILDING S15R, NORTH – POWER, CONTROL AND INSTRUMENTATION PLAN
E-8	BUILDING S15R LIGHTING AND RECEPTACLE PLAN
E-9	BUILDING S15R HVAC, FIRE AND SECURITY PLAN
E-10	S16 ELECTRICAL PLAN AND DETAILS
E-11	[PB 01] SCHEDULE, SPECIFICATIONS AND LOAD DISTRIBUTION
E-12	MCCN AND MCCS ELEVATIONS
E-13	MOTOR STARTER NOTES
E-14A	MOTOR STARTER ELEMENTARY WIRING DIAGRAM
E-14B	MOTOR STARTER ELEMENTARY WIRING DIAGRAM
E-15A	MOTOR STARTER ELEMENTARY WIRING DIAGRAM
E-15B	MOTOR STARTER ELEMENTARY WIRING DIAGRAM
E-16	[CP 01] CONTROL PANEL EXTERIOR ELEVATION
E-17	[CP 01] CONTROL PANEL INTERIOR ELEVATION
E-18	CONTROL PANEL ELEMENTARY WIRING DIAGRAM
E-19	CONTROL PANEL ELEMENTARY WIRING DIAGRAM
E-20	CONTROL PANEL ELEMENTARY WIRING DIAGRAM
E-21	ANALOG LOOP DIAGRAM
E-22	ANALOG LOOP DIAGRAM
E-23	ANALOG LOOP DIAGRAM
E-24	ANALOG LOOP DIAGRAM
E-25	PLC I/O TABLES
E-26	PLC I/O TABLES
E-27	NETWORK DIAGRAM
EC-1	CABLE AND CONDUIT SCHEDULES
EC-2	CABLE AND CONDUIT SCHEDULES
ED-1	ELECTRICAL DETAILS
ED-2	ELECTRICAL DETAILS
ED-3	ELECTRICAL DETAILS
ED-4	ELECTRICAL DETAILS

DEVICE TAG LIST

TAG ID#	TAG DESCRIPTION	VINTAGE
AER 01	PACKAGE AERATION UNIT	NEW
AFM 01	AIRFLOW METER	NEW
AKP 01	ACCESS KEYPAD, ENTRANCE MOTORIZED GATE OPERATOR NO. 1	NEW
AML 01	ACCESS MAGNETIC LOCK, ENTRANCE MOTORIZED GATE OPERATOR NO. 1	NEW
AML 02	ACCESS MAGNETIC LOCK, EXIT MOTORIZED GATE OPERATOR NO. 2	NEW
ATS 01	AUTOMATIC TRANSFER SWITCH	NEW
B 01	AERATION BLOWER NO. 1	NEW
B 02	AERATION BLOWER NO. 2	NEW
BLDG 01	WELL S15R BUILDING	NEW
BLDG 02	S16 ENCLOSURE	NEW
BP 01	BOOSTER PUMP NO. 1	NEW
BP 02	BOOSTER PUMP NO. 2	NEW
C 01	CONTROL TIMER, EXHAUST FAN NO. 1	NEW
CA 01	CHLORINE ANALYZER	NEW
CEP 01	COMMUNICATION EQUIPMENT POLE NO. 1	EXISTING
CEP 02	COMMUNICATION EQUIPMENT POLE NO. 2	EXISTING
CMOD 01	LTE CELLULAR MODEM [CMOD 01] AND LIGHTNING PROTECTION	NEW
CP 01	CONTROL PANEL, MAIN	NEW
CP 02	CONTROL PANEL, EXTERIOR LIGHTING	NEW
CREC 01	CONVENIENCE RECEPTACLE AND ETHERNET PORT	NEW
CS 01	CONTROL STATION, INDOOR, ROLLUP DOOR OPERATOR SYSTEM	NEW
CS 02	CONTROL STATION, OUTDOOR, ROLLUP DOOR OPERATOR SYSTEM	NEW
CTE 01	CURRENT TRANSFORMER ENCLOSURE	NEW
DP 01	DIFFERENTIAL PRESSURE GAUGE, BLOWER FILTER	NEW

DEVICE TAG LIST

TAG ID#	TAG DESCRIPTION	VINTAGE
EF 01	EXHAUST FAN NO. 1	NEW
ES 01	ETHERNET SWITCH	NEW
ES 02	ETHERNET SWITCH	NEW
FC 01	FAN COIL, WALL MOUNTED, HEAT PUMP	NEW
FIT 01	FLOW INDICATING TRANSMITTER, WELL PUMP S15R MAGNETIC FLOW METER NO. 1	NEW
FIT 02	FLOW INDICATING TRANSMITTER, WELL PUMP S16 MAGNETIC FLOW METER NO. 2	NEW
FIT 03	FLOW INDICATING TRANSMITTER, PACKAGE AERATION UNIT MAGNETIC FLOW METER NO. 3	NEW
FIT 05	FLOW INDICATING TRANSMITTER, AIRFLOW METER	NEW
FM 01	MAGNETIC FLOW METER NO. 1, WELL PUMP S15R	NEW
FM 02	MAGNETIC FLOW METER NO. 2, WELL PUMP S16	NEW
FM 03	MAGNETIC FLOW METER NO. 3, PACKAGE AERATION UNIT	NEW
FS 01	FLOW SWITCH, [CA 01]	NEW
GADP 01	AUXILIARY DEVICE PANEL, AUXILIARY GENERATOR	NEW
GCB 01	CIRCUIT BREAKER, MAIN, AUXILIARY GENERATOR	NEW
GCB 02	CIRCUIT BREAKER, LOAD BANK, AUXILIARY GENERATOR	NEW
GCP 01	CONTROL PANEL, AUXILIARY GENERATOR	NEW
GEN 01	GENERATOR, AUXILIARY	NEW
GLB 01	LOAD BANK, AUXILIARY GENERATOR	NEW
GO 01	MOTORIZED GATE OPERATOR NO. 1, ENTRANCE	NEW
GO 02	MOTORIZED GATE OPERATOR NO. 2, EXIT	NEW
HCV 01	CONTROL VALVE, DISCHARGE TO WASTE, WELL S15R	NEW
HCV 02	CONTROL VALVE, WELL S15R TREATMENT	NEW
HCV 03	CONTROL VALVE, DISCHARGE TO WASTE, WELL S16	NEW
HCV 04	CONTROL VALVE, WELL S16 TREATMENT	NEW
HOA 01	HAND OFF AUTO SELECTOR SWITCH, WELL PUMP S15R	NEW
HOA 02	HAND OFF AUTO SELECTOR SWITCH, WELL PUMP S16	NEW
HOA 03	HAND OFF AUTO SELECTOR SWITCH, AERATION BLOWER NO. 1	NEW
HOA 04	HAND OFF AUTO SELECTOR SWITCH, AERATION BLOWER NO. 2	NEW
HOA 05	HAND OFF AUTO SELECTOR SWITCH, BOOSTER PUMP NO. 1	NEW
HOA 06	HAND OFF AUTO SELECTOR SWITCH, BOOSTER PUMP NO. 2	NEW
HOA 07	HAND OFF AUTO SELECTOR SWITCH, CHEMICAL METERING PUMP NO. 1	NEW
HP 01	HEAT PUMP	NEW
HST 01	HYPOCHLORITE STORAGE TANK	NEW
HT 01	HEATER NO. 1, 3KW	NEW
HT 02	HEATER NO. 2, 3KW	NEW
HT 03	HEATER NO. 3, 3KW	NEW
HT 04	HEATER NO. 4, 3KW	NEW
ISW 01	INTRUSION SWITCH, WEST DOOR, ELECTRICAL ROOM	NEW
ISW 02	INTRUSION SWITCH, EAST DOOR, STORAGE ROOM	NEW
ISW 03	INTRUSION SWITCH, HYPOCHLORITE ROOM	NEW
ISW 04	INTRUSION SWITCH, BLOWER ROOM	NEW
ISW 05	INTRUSION SWITCH, SOUTHWEST, TREATMENT ROOM	NEW
ISW 06	INTRUSION SWITCH, ROLL UP DOOR, TREATMENT ROOM	NEW
ISW 07	INTRUSION SWITCH, NORTHWEST, TREATMENT ROOM	NEW
ISW 08	INTRUSION SWITCH, SOUTHEAST, TREATMENT ROOM	NEW
ISW 09	INTRUSION SWITCH, S16 WELL BUILDING	NEW
L 01	LIMIT SWITCH, DISCHARGE TO WASTE, WELL S15R FLOW CONTROL VALVE	NEW
L 02	LIMIT SWITCH, WELL S15R TREATMENT CONTROL VALVE	NEW
L 03	LIMIT SWITCH, DISCHARGE TO WASTE, WELL S16 FLOW CONTROL VALVE	NEW
L 04	LIMIT SWITCH, WELL S16 TREATMENT CONTROL VALVE	NEW
LS 01	LEVEL SENSOR, LOW LEVEL, PACKAGE AERATION UNIT	NEW
LS 02	LEVEL SENSOR, HIGH LEVEL, PACKAGE AERATION UNIT	NEW
MB 01	METER BASE	NEW
MCB 01	MCC CIRCUIT BREAKER, MAIN	NEW
MCB 02	MCC CIRCUIT BREAKER, TRANSFORMER 45 KVA	NEW
MCB 03	MCC CIRCUIT BREAKER, NORTH WALL MOTOR CONTROL CENTER	NEW
MCB 04	MCC CIRCUIT BREAKER, 3KW HEATER NO. 1	NEW
MCB 05	MCC CIRCUIT BREAKER, 3KW HEATER NO. 2	NEW
MCB 06	MCC CIRCUIT BREAKER, 3KW HEATER NO. 3	NEW
MCB 07	MCC CIRCUIT BREAKER, 3KW HEATER NO. 4	NEW
MCB 08	MCC CIRCUIT BREAKER, [WH 01] WATER HEATER 20KW	NEW
MCB 09	MCC CIRCUIT BREAKER, SPARE	NEW
MCCN 01	MOTOR CONTROL CENTER, NORTH WALL	NEW
MCCS 01	MOTOR CONTROL CENTER, SOUTH WALL	NEW
MLUG 01	MCC LUGS, NORTH WALL MOTOR CONTROL CENTER	NEW
MP 01	METERING PUMP NO. 1	NEW
MS 01	MOTOR STARTER, WELL PUMP S15R	NEW
MS 02	MOTOR STARTER, WELL PUMP S16	NEW
MS 03	MOTOR STARTER, AERATION BLOWER NO. 1	NEW
MS 04	MOTOR STARTER, AERATION BLOWER NO. 2	NEW
MS 05	MOTOR STARTER, BOOSTER PUMP NO. 1	NEW
MS 06	MOTOR STARTER, BOOSTER PUMP NO. 2	NEW
MSDS 01	MOTOR SAFETY DISCONNECT SWITCH, WELL PUMP S15R	NEW
MSDS 02	MOTOR SAFETY DISCONNECT SWITCH, WELL PUMP S16	NEW
MSDS 03	MOTOR SAFETY DISCONNECT SWITCH, AERATION BLOWER NO. 1	NEW
MSDS 04	MOTOR SAFETY DISCONNECT SWITCH, AERATION BLOWER NO. 2	NEW

DEVICE TAG LIST

TAG ID#	TAG DESCRIPTION	VINTAGE
MSDS 05	MOTOR SAFETY DISCONNECT SWITCH, BOOSTER PUMP NO. 1	NEW
MSDS 06	MOTOR SAFETY DISCONNECT SWITCH, BOOSTER PUMP NO. 2	NEW
MSDS 07	MOTOR SAFETY DISCONNECT SWITCH, [WH 01]	NEW
MTR 01	MOTOR, WELL PUMP S15R	NEW
MTR 02	MOTOR, WELL PUMP S16	NEW
MTR 03	MOTOR, AERATION BLOWER NO. 1	NEW
MTR 04	MOTOR, AERATION BLOWER NO. 2	NEW
MTR 05	MOTOR, BOOSTER PUMP NO. 1	NEW
MTR 06	MOTOR, BOOSTER PUMP NO. 2	NEW
OIU 01	OPERATOR INTERFACE UNIT	NEW
PB 01	PANELBOARD 208/120V, WELL S15R BUILDING	NEW
PB 02	PANELBOARD 208/120V, S16 ENCLOSURE	NEW
PC 01	PHOTO CELL	NEW
PE 01	PHOTO EYE, ROLLUP DOOR OPERATOR SYSTEM	NEW
PE 02	PHOTO EYE, ROLLUP DOOR OPERATOR SYSTEM	NEW
PE 03	ENTRANCE GATE PHOTO EYE NO. 1, ENTRANCE MOTORIZED GATE OPERATOR NO. 1	NEW
PE 04	ENTRANCE GATE PHOTO EYE NO. 2, ENTRANCE MOTORIZED GATE OPERATOR NO. 1	NEW
PE 05	EXIT GATE PHOTO EYE NO. 1, EXIT MOTORIZED GATE OPERATOR NO. 2	NEW
PE 06	EXIT GATE PHOTO EYE NO. 2, EXIT MOTORIZED GATE OPERATOR NO. 2	NEW
PFLT 03	PASSIVE FILTER, AERATION BLOWER NO. 1	NEW
PFLT 04	PASSIVE FILTER, AERATION BLOWER NO. 2	NEW
PFLT 05	PASSIVE FILTER, BOOSTER PUMP NO. 1	NEW
PFLT 06	PASSIVE FILTER, BOOSTER PUMP NO. 2	NEW
PG 01	PRESSURE GAUGE, BLOWER AIR PRESSURE	NEW
PH 01	PH ANALYZER TRANSMITTER POST, PACKAGE AERATION UNIT	NEW
PH 02	PH ANALYZER TRANSMITTER, PRE, PACKAGE AERATION UNIT	NEW
PH 03	PH ANALYZER TRANSMITTER, PRE, PACKAGE AERATION UNIT	NEW
PLC 01	PROGRAMMABLE LOGIC CONTROLLER	NEW
PMU 01	POWER MONITORING UNIT	NEW
PS 01	POWER SUPPLY NO. 1, PROCESS 24 VDC, PRIMARY	NEW
PS 02	POWER SUPPLY NO. 2, PROCESS 12 VDC	NEW
PT 01	PRESSURE TRANSMITTER, SYSTEM DISCHARGE	NEW
RAD 01	UHF RADIO/MODEM [RAD 01] AND LIGHTNING PROTECTION	NEW
RDOS 01	ROLLUP DOOR OPERATOR SYSTEM	NEW
RTD 01	RTD, ANALYZER SAMPLE WATER LINE	NEW
SE 01	SENSING EDGE, [GO 01]	NEW
SE 02	SENSING EDGE, [GO 01]	NEW
SE 03	SENSING EDGE, [GO 01]	NEW
SE 04	SENSING EDGE, [GO 02]	NEW
SE 05	SENSING EDGE, [GO 02]	NEW
SE 06	SENSING EDGE, [GO 02]	NEW
SD 01	SMOKE DETECTOR, WEST, ELECTRICAL ROOM	NEW
SD 02	SMOKE DETECTOR, EAST, ELECTRICAL ROOM	NEW
SD 03	SMOKE DETECTOR, HYPOCHLORITE ROOM	NEW
SD 04	SMOKE DETECTOR, BLOWER ROOM	NEW
SD 05	SMOKE DETECTOR, SOUTH, TREATMENT ROOM	NEW
SD 06	SMOKE DETECTOR, NORTH, TREATMENT ROOM	NEW
SD 07	SMOKE DETECTOR, S16 WELL BUILDING	NEW
SDS 01	SAFETY DISCONNECT SWITCH, HEAT PUMP	NEW
SDS 02	SAFETY DISCONNECT SWITCH	NEW
SDS 03	SAFETY DISCONNECT SWITCH, SUPPLY FAN	NEW
SF 01	SUPPLY FAN	NEW
SL 01	SAFETY LOOP NO. 1, EXIT MOTORIZED GATE OPERATOR NO. 2	NEW
SL 02	SAFETY LOOP NO. 2, EXIT MOTORIZED GATE OPERATOR NO. 2	NEW
SL 03	SAFETY LOOP NO. 3, ENTRANCE MOTORIZED GATE OPERATOR NO. 1	NEW
SL 04	SAFETY LOOP NO. 4, ENTRANCE MOTORIZED GATE OPERATOR NO. 1	NEW
SLT 01	LEVEL TRANSMITTER, WELL S15R	NEW
SLT 02	LEVEL TRANSMITTER, WELL S16	NEW
SLT 03	LEVEL TRANSMITTER, AERATION TREATMENT SYSTEM	NEW
SPD 01	SURGE PROTECTIVE DEVICE	NEW
SPD 02	SURGE PROTECTIVE DEVICE	NEW
SV 01	SOLENOID VALVE, DISCHARGE TO WASTE, WELL S15R FLOW CONTROL VALVE	NEW
SV 02	SOLENOID VALVE, WELL S15R TREATMENT CONTROL VALVE	NEW
SV 03	SOLENOID VALVE, DISCHARGE TO WASTE, WELL S16 FLOW CONTROL VALVE	NEW
SV 04	SOLENOID VALVE, WELL S16 TREATMENT CONTROL VALVE	NEW
SV 05	SOLENOID VALVE, pH	NEW
SV 06	SOLENOID VALVE, pH	NEW
T 01	THERMOSTAT NO. 1	NEW
T 02	THERMOSTAT NO. 2, SUPPLY FAN	NEW
ULS 01	ULTRASONIC LEVEL SENSOR NO. 1, HYPOCHLORITE STORAGE TANK	NEW
UPS 01	UNINTERRUPTIBLE POWER SUPPLY	NEW
UPSE 01	UNINTERRUPTIBLE POWER SUPPLY ENCLOSURE	NEW
UT 01	UTILITY TRANSFORMER	EXISTING
WH 01	WATER HEATER, INSTANT 20KW	NEW
WP S15R	WELL PUMP S15R	NEW
WP S16	WELL PUMP S16	NEW
XFMR 01	TRANSFORMER 45 KVA	NEW

Gray & Osborne, Inc.
CONSULTING ENGINEERS
1130 RAINIER AVENUE SOUTH, SUITE 300
SEATTLE, WASHINGTON 98144

DATE: SEPT 2022
DRAWN: PEB
CHECKED: PAM
APPROVED: MBS

No.	REVISION	DATE	APPD

MICHAEL B. SWEENEY — STATE OF WASHINGTON — 22-26-22

CITY OF LACEY
THURSTON COUNTY WASHINGTON
BEACHCREST WELLFIELD pH IMPROVEMENTS
SHEET LIST AND TAG LIST

SHEET: E-2
SHEET: 47 of 81

JOB NO.: 19520
DWG:E_SYM_ABBR

L:\LACEY\19520 pH Predesign and S17 Facilities Design\PLANSET\E-Sheets\E_SYM_ABBR.dwg, 9/26/2022 1:19 PM, LIZ BATES

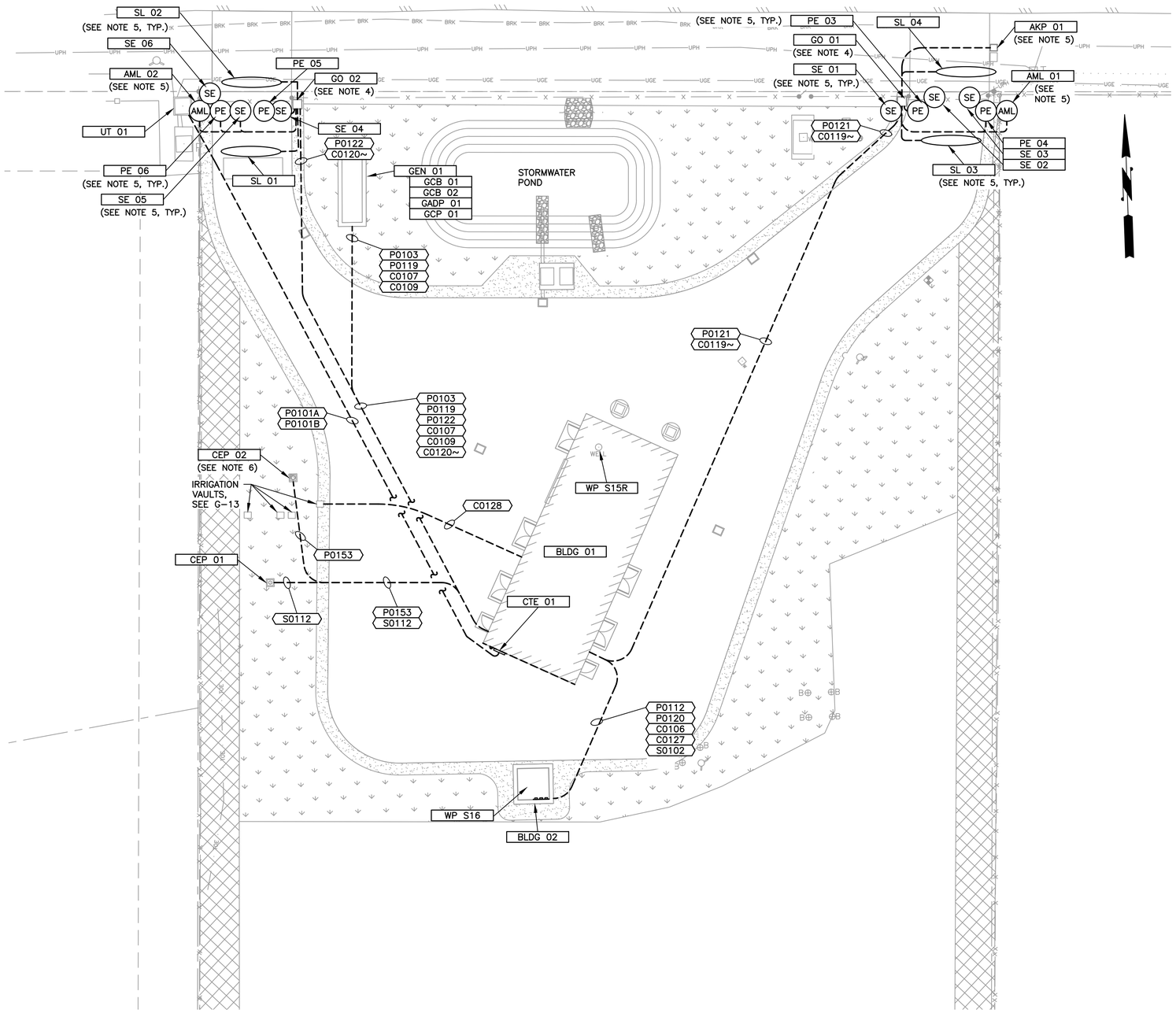

ELECTRICAL SITE PLAN

SCALE: 1"=15'"

NOTES:

1. SEE NOTES ON E-1.
2. ELECTRICAL DEMOLITION IS NOT SHOWN ON THE ELECTRICAL DRAWINGS. SEE GENERAL AND MECHANICAL DRAWINGS FOR ELECTRICAL DEMOLITION.
3. ALL EXISTING ELECTRICAL EQUIPMENT, CONDUIT, CONDUCTORS, AND CABLES SHALL BE DEMOLISHED UNLESS NOTED OTHERWISE.
4. PROVIDE AND INSTALL 3/4" X 10' COPPER CLAD GROUND ROD AND #6 AWG BARE COPPER CONDUCTOR AND CONNECT TO EACH MOTORIZED GATE OPERATOR PER MANUFACTURER'S DOCUMENTATION. PROVIDE AND INSTALL 120V, 30A, NEMA 4 DISCONNECT PER MANUFACTURER'S DOCUMENTATION AND EXTEND CIRCUIT TO MOTORIZED GATE OPERATOR. CONDUIT NUMBERS ARE NOT PROVIDED FOR MOTORIZED GATE OPERATOR ANCILLARY EQUIPMENT. PROVIDE CONDUITS PER THE SPECIFICATIONS, 3/4" MINIMUM, AND CONDUCTORS/CABLES PER MANUFACTURER'S DOCUMENTATION.
5. PROVIDE AND INSTALL MANUFACTURER'S RECOMMENDED CABLE BETWEEN THE MOTORIZED GATE OPERATOR AND THE FOLLOWING ASSOCIATED COMPONENTS PER THE MANUFACTURER'S DOCUMENTATION:
   5.1. 4X PHOTO EYE SAFETY SENSORS (TWO AT ENTRANCE, TWO AT EXIT),
   5.2. 4X PROXIMITY SENSORS, (TWO AT ENTRANCE, TWO AT EXIT),
   5.3. 1X ACCESS KEYPAD (ONE AT ENTRANCE),
   5.4. 6X SENSING EDGES (THREE AT ENTRANCE, THREE AT EXIT),
   5.5. 2X MAGNETIC LOCKS (ONE AT ENTRANCE, ONE AT EXIT),
   5.5. THE FIRE ACCESS GATE SWITCH.
6. POWER CIRCUIT TO [CEP 02] SHALL REMAIN POWERED AT ALL TIMES. CONTRACTOR SHALL PROVIDE AND INSTALL NEMA 4 RECEPTACLE WITH IN-SERVICE WEATHERPROOF COVER, COORDINATE MOUNTING HEIGHT WITH THE OWNER.

0 1" 2"
TWO INCHES AT FULL SCALE.
IF NOT, SCALE ACCORDINGLY

Gray & Osborne, Inc.
CONSULTING ENGINEERS
1130 RAINIER AVENUE SOUTH, SUITE 300
SEATTLE, WASHINGTON 98144

DATE: SEPT 2022	
DRAWN:	PEB
CHECKED:	PAM
APPROVED:	MBS

No.	REVISION	DATE	APPD

MICHAEL B. SWEENEY
STATE OF WASHINGTON
40509
PROFESSIONAL ENGINEER
9-26-22

CITY OF LACEY
THURSTON COUNTY WASHINGTON
BEACHCREST WELLFIELD pH IMPROVEMENTS
ELECTRICAL SITE PLAN

SHEET: E-3
SHEET: 48 of 81
JOB NO.: 19520
DWG:E_SP

L:\LACEY\19520 pH Predesign and S17 Facilities Design\PLANSET\E-Sheets\E_SP.dwg, 9/26/2022 1:20 PM, LIZ BATES

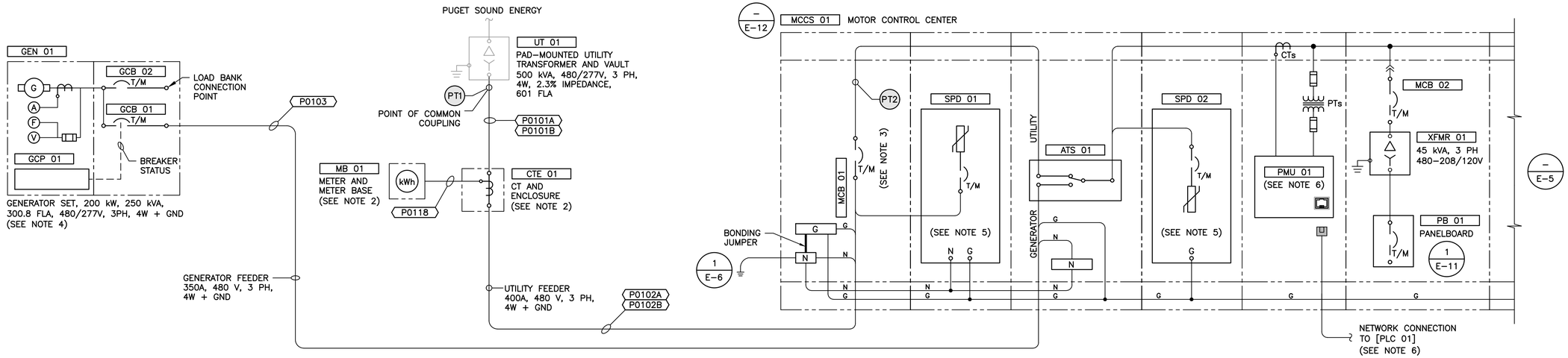

1 ONE LINE DIAGRAM

NOT TO SCALE

POWER DEVICE SIZING

TAG NUMBER	RATED VOLTAGE	OPERATING VOLTAGE	POLES/ PHASES	AMPACITY	MIN. INTERRUPT AND WITHSTAND RATING	ENCLOSURE TYPE
ATS 01	600 V	480 V	3	400 A	42 kAIC	IN [MCCS 01]
CTE 01	600 V	480 V	3	NA	NA	NEMA 3R, 304 SS
GCB 01, 02	600 V	480 V	3	350 AT, 400 AF	25 kAIC	IN [GEN 01]
MCB 01	600 V	480 V	3	400 AT, 400 AF	42 kAIC	IN [MCCS 01]
MCB 02	600 V	480 V	3	50 AT, 125 AF	42 kAIC	IN [MCCS 01]
MCB 03	600 V	480 V	3	400 AT, 400 AF	42 kAIC	IN [MCCS 01]
MCB 04, 05, 06, 07, 09	600 V	480 V	3	20 AT, 125 AF	42 kAIC	IN [MCCS 01]
MCB 08	600 V	480 V	3	40 AT, 125 AF	42 kAIC	IN [MCCS 01]
MS 01, 02, 03, 04, 05, 06	REFERENCE MOTOR STARTER NOTES ON SHEET E-13					
[MCCN 01] AND [MCCS 01]	REFERENCE MCC SPECIFICATIONS ON SHEET E-12					

BOLTED FAULT TABLE

FAULT POINT	3PH SHORT CIRCUIT VALUES
PT1	33.6 kAIC
PT2	20.6 kAIC

(SEE NOTE 7)

MCC [MCCN 01] AND [MCCS 01] LOAD SUMMARY

(CALCULATIONS BASED ON 480 V) — D.F. = DEMAND FACTOR

LOAD DESCRIPTION	CONNECTED LOADS			UTILITY LOAD DEMAND		GENERATOR LOADS	
	STARTER	HP	kVA	D.F.	kVA	D.F	kVA
[MTR 01], MOTOR, WELL PUMP S15R	RVSS	15.0	16.7	100%	16.7	100%	16.7
[MTR 02], MOTOR, WELL PUMP S16	RVSS	15.0	16.7	100%	16.7	100%	16.7
[MTR 03], MOTOR, AERATION BLOWER NO. 1	VFD	15.0	16.7	100%	16.7	100%	16.7
[MTR 04], MOTOR, AERATION BLOWER NO. 2	VFD	15.0	16.7	0%	0.0	0%	0.0
[MTR 05], MOTOR, BOOSTER PUMP NO. 1	VFD	40.0	41.4	100%	41.4	100%	41.4
[MTR 06], MOTOR, BOOSTER PUMP NO. 2	VFD	40.0	41.4	0%	0.0	0%	0.0
[HT 01], HEATER NO. 1			3.0	100%	3.0	100%	3.0
[HT 02], HEATER NO. 2			3.0	100%	3.0	100%	3.0
[HT 03], HEATER NO. 3			3.0	100%	3.0	100%	3.0
[HT 04], HEATER NO. 4			3.0	100%	3.0	100%	3.0
[WH 01], WATER HEATER (20KW)			20	100%	20	100%	20
[XFMR 01], TRANSFORMER 45KW			45.0	80%	36.0	80%	36.0
TOTAL kVA:			226.8		159.6		159.6
RESULTING AMPACITY AT 480 VAC, 3 PH:			272.8		192.0		192.0
SYSTEM SIZED AT: 400 A							

NOTES:

1. SEE NOTES ON E-1.
2. METER IS PROVIDED BY THE POWER UTILITY COMPANY. METER BASE SHALL BE 304 STAINLESS STEEL PROVIDED BY THE CONTRACTOR PER POWER UTILITY COMPANY'S SPECIFICATIONS.
3. MAIN CIRCUIT BREAKER [MCB 01] SHALL BE SUSE RATED WITH AN AUXILIARY CONTACT THAT OPENS WHEN THE BREAKER IS IN ITS OPEN/TRIPPED POSITION.
4. GENERATOR CIRCUIT BREAKER [GCB 01] SHALL BE PROVIDED WITH A LOCKABLE HANDLE AND AN AUXILIARY CONTACT THAT OPENS WHEN THE BREAKER IS IN ITS OPEN/TRIPPED POSITION. THIS CIRCUIT SHALL BE PREWIRED BY THE GENERATOR MANUFACTURER TO THE GENERATOR CONTROL PANEL [GCP 01] IN LFMC CONDUIT.
5. [SPD 01] SHALL BE 240 kA PER PHASE/120 kA PER MODE, FULL MODE, WITH NEUTRAL AND WITHOUT FILTER. [SPD 02] SHALL BE 240 kA PER PHASE/120 kA PER MODE, FULL MODE, WITHOUT NEUTRAL AND WITH FILTER. BOTH UNITS SHALL INCLUDE INTERNAL DISCONNECT/OVERCURRENT PROTECTION AND FORM A CONTACTS THAT CLOSE WHEN THE UNITS ARE FAULTED.
6. POWER MONITOR UNIT [PMU 01] SHALL COMMUNICATE WITH [PLC 01] OVER A NETWORK. THE CONTRACTOR SHALL PROVIDE NECESSARY COMMUNICATION CARDS, INTERFACES, CONNECTORS, AND CABLES TO PROVIDE COMMUNICATION BETWEEN THE PMU AND PLC. [PMU 01] SHALL INCLUDE A FROM A CONTACT THAT CLOSES ON ANY POWER FAULT.
7. THREE PHASE SHORT CIRCUIT BOLTED FAULT CALCULATIONS ARE BASED ON INFINITE UTILITY CONTRIBUTION, +10% VARIANCE IN UTILITY VOLTAGE, -10% VARIANCE IN TRANSFORMER IMPEDANCE, AND A 500 KVA TRANSFORMER WITH 2.3% ASSUMED IMPEDANCE. FAULT CALCULATIONS ALSO INCLUDE 1,618 AIC MOTOR REGENERATIVE CONTRIBUTION FROM THE PUMP MOTORS ADDED TO EACH FAULT POINT.

Gray & Osborne, Inc.
CONSULTING ENGINEERS
1130 RAINIER AVENUE SOUTH, SUITE 300
SEATTLE, WASHINGTON 98144

DATE: SEPT 2022 | DRAWN: PEB | CHECKED: PAM | APPROVED: MBS

No.	REVISION	DATE	APPD

MICHAEL B. STEARNEY — STATE OF WASHINGTON — REGISTERED PROFESSIONAL ENGINEER — 45260 — 9-26-22

CITY OF LACEY
THURSTON COUNTY WASHINGTON
BEACHCREST WELLFIELD pH IMPROVEMENTS
ONELINE DIAGRAM

SHEET: E-4
SHEET: 49 of 81
JOB NO.: 19520
DWG:E_OLD

L:\LACEY\19520 pH Predesign and S17 Facilities Design\PLANSET\E-Sheets\E_OLD.dwg, 9/26/2022 1:21 PM, LIZ BATES

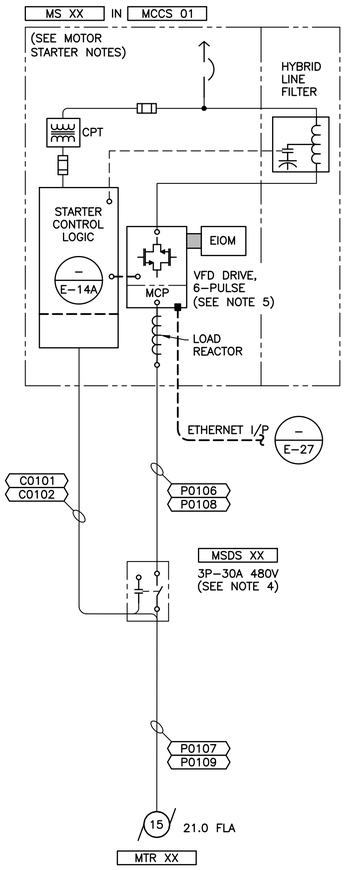

1 — **ONE LINE DIAGRAM**
NOT TO SCALE

[XX = 03] = AERATION BLOWER NO. 1
[XX = 04] = AERATION BLOWER NO. 2

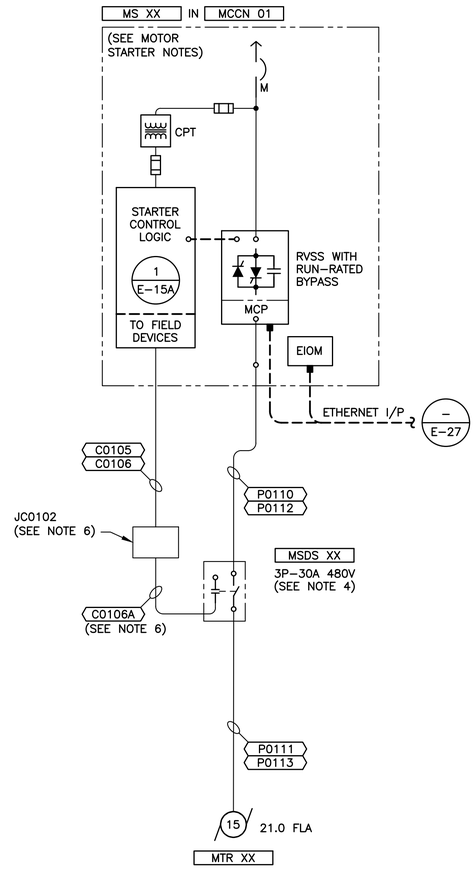

2 — **ONE LINE DIAGRAM**
NOT TO SCALE

[XX = 01] = WELL PUMP S15R
[XX = 02] = WELL PUMP S16

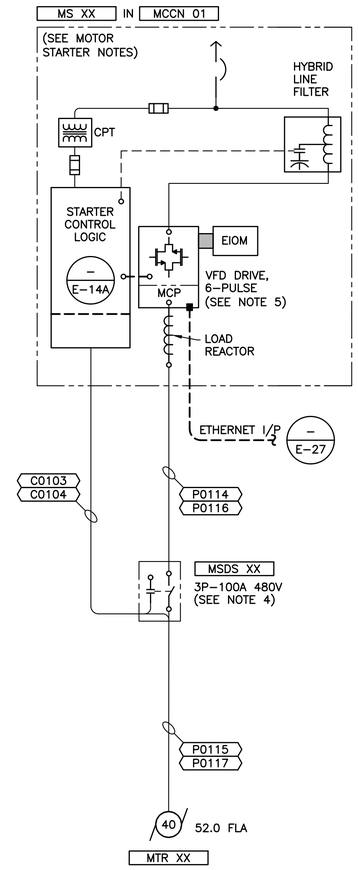

3 — **ONE LINE DIAGRAM**
NOT TO SCALE

[XX = 05] = BOOSTER PUMP NO. 1
[XX = 06] = BOOSTER PUMP NO. 2

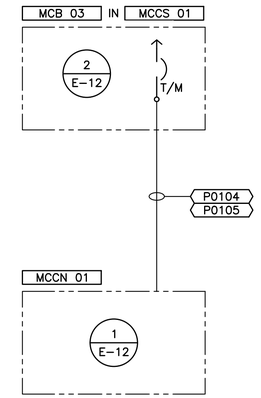

4 — **ONE LINE DIAGRAM**
NOT TO SCALE

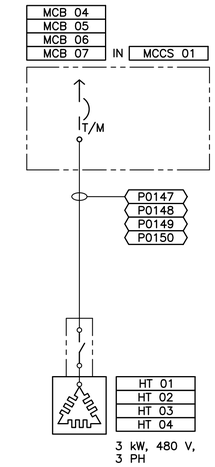

5 — **ONE LINE DIAGRAM**
NOT TO SCALE

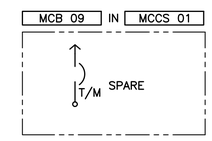

6 — **ONE LINE DIAGRAM**
NOT TO SCALE

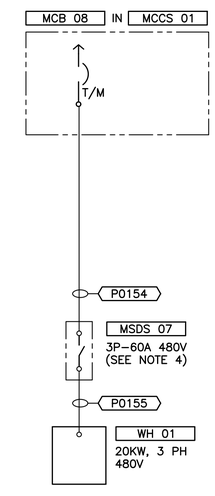

7 — **ONE LINE DIAGRAM**
NOT TO SCALE

1. REFERENCE MOTOR STARTER NOTES ON E-13.
2. THE MCC MANUFACTURER SHALL PROVIDE SEPARATE MCC STARTERS AND PASSIVE LINE FILTERS FOR EACH MOTOR. EACH STARTER WILL HAVE ITS LINE FILTER MOUNTED ADJACENT TO ITS ASSOCIATED STARTER, FACTORY CONNECTED, AND SHIPPED AS A CONNECTED SPLIT. THE MANUFACTURER MAY INSTALL THE LOAD REACTORS IN THE SAME ENCLOSURE WITH THE PASSIVE LINE FILTERS.
3. THE MOTOR STARTERS WILL BE NETWORKED TO THE PLC. THE MCC MANUFACTURER SHALL PROVIDE APPROPRIATE INTERFACE MODULES AND PROGRAMMING AS REQUIRED TO ASSURE SEAMLESS CONNECTIVITY TO THE PLC. FOR CONSISTENCY, ALL NETWORK CONNECTIONS SHOWN THROUGHOUT THIS PLAN SET REFER TO THE NETWORK SIMPLY AS "ETHERNET".
4. MOTOR SAFETY DISCONNECT SWITCHES [MSDS 01, 03, 04, 05, 06 AND 07], SHALL BE MOTOR HORSEPOWER RATED, NEMA 12 GASKETED, AND SHALL INCLUDE AN AUXILIARY CONTACT CONNECTED TO THE SWITCH PIVOT ARM THAT OPENS WHEN THE SWITCH IS IN THE OPEN POSITION AND CLOSES WHEN THE SWITCH IS IN THE CLOSED POSITION. MOTOR SAFETY DISCONNECT SWITCHES SHALL INCLUDE AN EXTERNAL SWITCH HANDLE THAT IS LOCKABLE IN BOTH THE CLOSED POSITION WITH AN INTERLOCKING DOOR LATCH WHEN IN THE CLOSED POSITION. FOR [MSDS 02] SEE A/E-10.
5. THE MCC MANUFACTURER SHALL PROVIDE MCC STARTERS AND PASSIVE LINE FILTERS FOR EACH MOTOR IN THE SAME ENCLOSURE.
6. WELL PUMP [WP 02] ONLY.

Gray & Osborne, Inc.
CONSULTING ENGINEERS
1130 RAINIER AVENUE SOUTH, SUITE 300
SEATTLE, WASHINGTON 98144

DATE: SEPT 2022 | DRAWN: PEB | CHECKED: PAM | APPROVED: MBS

No.	REVISION	DATE	APPD

MICHAEL B. SWERVEY — STATE OF WASHINGTON — 22522 — PROFESSIONAL ENGINEER — 9-26-22

CITY OF LACEY
THURSTON COUNTY WASHINGTON
BEACHCREST WELLFIELD pH IMPROVEMENTS
ONELINE DIAGRAM

SHEET: **E-5**
SHEET: **50 of 81**
JOB NO.: 19520
DWG:E_OLD

L:\LACEY\19520 pH Predesign and S17 Facilities Design\PLANSET\E-Sheets\E_OLD.dwg, 9/26/2022 1:21 PM, LIZ BATES

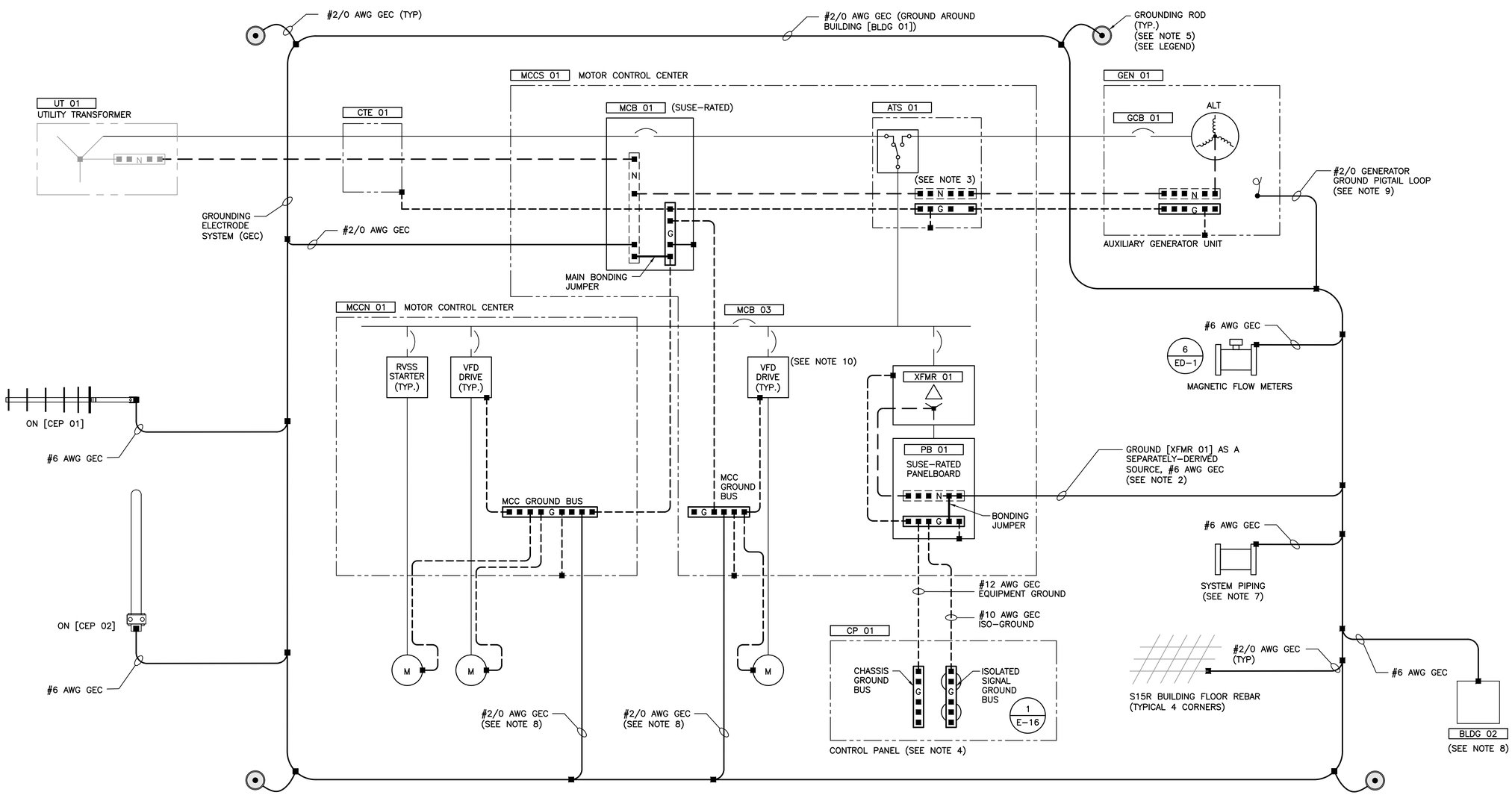

NOTES:

1. REFERENCE SPECIFICATION 16060.
2. ALL POWER TRANSFORMERS ARE CONSIDERED A SEPARATELY DERIVED SOURCE AND MUST BE GROUNDED APPROPRIATELY. SMALL CONTROL TRANSFORMERS DEDICATED TO DRIVES AND CONTROLS ARE NOT CONSIDERED SEPARATELY DERIVED. GROUND SEPARATELY-DERIVED SOURCE [XFMR 01] TO THE GROUND LOOP USING AN INSULATED, GREEN, #6 AWG GEC.
3. A NEUTRAL BUS WILL NOT BE INCLUDED IN [MCCN 01, MCCS 01] PAST CONNECTION TO THE GENERATOR. NEUTRAL CONDUCTORS SHALL BE PROVIDED FROM THE SUSE NEUTRAL AT [MCB 01] TO [GEN 01] THROUGH A NEUTRAL BUS IN [ATS 01].
4. THE ISOLATED GROUND BUS IN [CP 01] IS NOT CONNECTED TO [CP 01] CHASSIS GROUND BUS, BUT THEY ARE AT THE SAME POTENTIAL.
5. DRIVE 10' X 3/4" GROUND RODS AT EACH CORNER OF [BLDG 01]. CONNECT TO GEC WITH #2/0 BARE COPPER GECs BURIED AT A DEPTH OF 30" MINIMUM. GROUND ROD CONNECTIONS SHALL BE ACCESSIBLE FROM WITHIN GROUND BOXES. (3 / ED-1)
6. BARE GROUND WIRES EMERGING FROM CONCRETE SHALL BE PROTECTED WITH PVC SCHEDULE 40 CONDUIT SLEEVES PER (2 / ED-1).
7. RUN A #6 AWG BARE COPPER GEC TO ALL METAL PROCESS PIPING GREATER THAN 6-INCH DIAMETER PENETRATING THE CONCRETE FLOOR AND TO THE WELL HEAD. CONNECT THE GROUND AT THE CLOSEST BOLT NEAREST THE FLOOR. ARRANGE THE WIRE TO PREVENT A TRIP HAZARD.
8. RUN ADDITIONAL #6 AWG BARE COPPER GEC BETWEEN THE GROUND LOOP AND [BLDG 02], THE ELECTRICAL EQUIPMENT STAND, AND THE WELL HEAD. RUN #2/0 BETWEEN MCCS AND THE GEC AND BETWEEN MCCN AND THE GEC.
9. PROVIDE A GROUND PIGTAIL FROM THE GROUND LOOP JUST UNDER GENERATOR CIRCUIT BREAKER [GCB 01]. CONNECT TO GENERATOR GROUND BUS IF REQUIRED BY L&I INSPECTOR.
10. CONDUCTORS FROM VFD MOTOR STARTERS TO THEIR ASSOCIATED MOTORS SHALL BE XHHW-2 IN CONTINUOUS PVC-COATED RGS (NO EXCEPTION). XHHW-2 CONDUCTORS SHALL BE OVERSIZED AS PER THE CABLE AND CONDUIT SCHEDULE WITH A FULL-SIZED GROUND (NO EXCEPTION).

(1 / –) **GROUNDING ONE LINE DIAGRAM**
NOT TO SCALE

GROUNDING LEGEND	
———	POWER CONDUCTORS
— — —	NEUTRAL CONDUCTORS
– – – – –	EQUIPMENT GROUND CONDUCTORS
———	GROUNDING ELECTRODE CONDUCTORS (GEC)
	GROUNDING ELECTRODE TAP
N	NEUTRAL BUS
G	GROUND BUS
	GROUNDING ROD BOX W/ 10' X ¾" GROUNDING ROD

Gray & Osborne, Inc.
CONSULTING ENGINEERS
1130 RAINIER AVENUE SOUTH, SUITE 300
SEATTLE, WASHINGTON 98144

DATE: SEPT 2022
DRAWN: PEB
CHECKED: PAM
APPROVED: MBS

No.	REVISION	DATE	APPD

MICHAEL B. STEENEY — STATE OF WASHINGTON — 40025 — REGISTERED PROFESSIONAL ENGINEER — 9-26-22

CITY OF LACEY
THURSTON COUNTY WASHINGTON
BEACHCREST WELLFIELD pH IMPROVEMENTS
GROUNDING ONELINE DIAGRAM

SHEET: E-6
SHEET: 51 of 81
JOB NO.: 19520
DWG:E_OLD

L:\LACEY\19520 pH Predesign and S17 Facilities Design\PLANSET\E-Sheets\E_OLD.dwg, 9/26/2022 1:21 PM, LIZ BATES

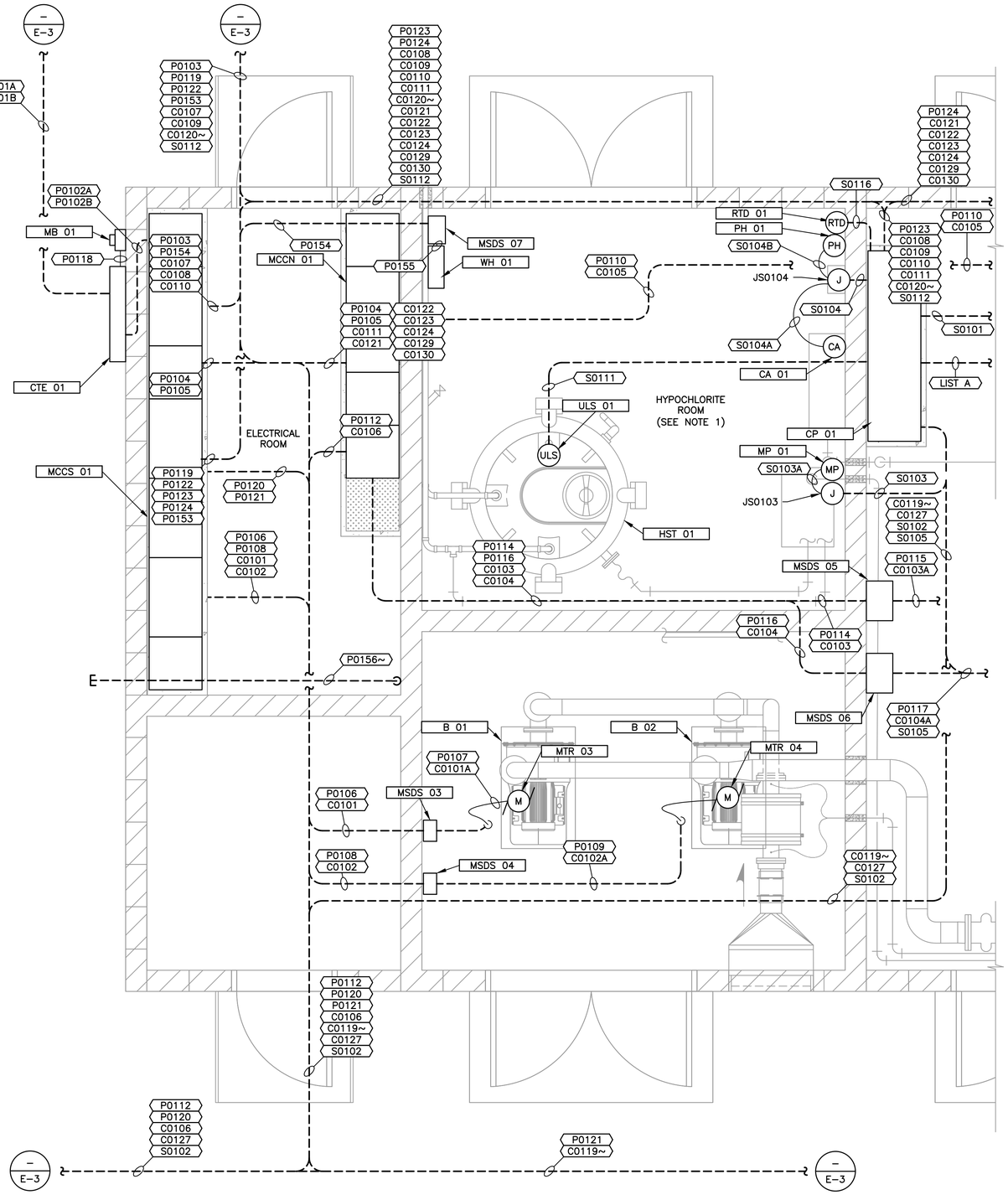

CONTINUED ON E-7B,
BUILDING S15R, NORTH – POWER,
CONTROL AND INSTRUMENTATION PLAN

LIST A

P0125	S0106	S0110
P0126	S0107	S0113
P0127	S0108	S0114
P0128	S0109	S0115

NOTES:

1. THE HYPOCHLORITE ROOM IS CONSIDERED CORROSIVE, ALL CONDUIT SHALL BE PVC–RGS, ALL MOUNTING HARDWARE SHALL BE 304 STAINLESS STEEL (MINIMUM), AND ALL JUNCTION BOXES AND ENCLOSURES SHALL BE 304 STAINLESS STEEL (MINIMUM).

1 / –

BUILDING S15R, SOUTH - POWER, CONTROL, AND INSTRUMENTATION PLAN

SCALE: 1/2"=1'-0"

0 1" 2"
TWO INCHES AT FULL SCALE.
IF NOT, SCALE ACCORDINGLY

Gray & Osborne, Inc.
CONSULTING ENGINEERS
1130 RAINIER AVENUE SOUTH, SUITE 300
SEATTLE, WASHINGTON 98144

DATE: SEPT 2022	
DRAWN:	PEB
CHECKED:	PAM
APPROVED:	MBS

No.	REVISION	DATE	APPD

MICHAEL B. SWEENEY
STATE OF WASHINGTON
PROFESSIONAL ENGINEER
9-26-22

CITY OF LACEY
THURSTON COUNTY WASHINGTON
BEACHCREST WELLFIELD pH IMPROVEMENTS
BUILDING S15R, SOUTH - POWER, CONTROL AND INSTRUMENTATION PLAN

SHEET: E-7A
SHEET: 52 of 81
JOB NO.: 19520
DWG:E_BLDG

L:\LACEY\19520 pH Predesign and S17 Facilities Design\PLANSET\E-Sheets\E_BLDG.dwg, 9/26/2022 1:23 PM, LIZ BATES

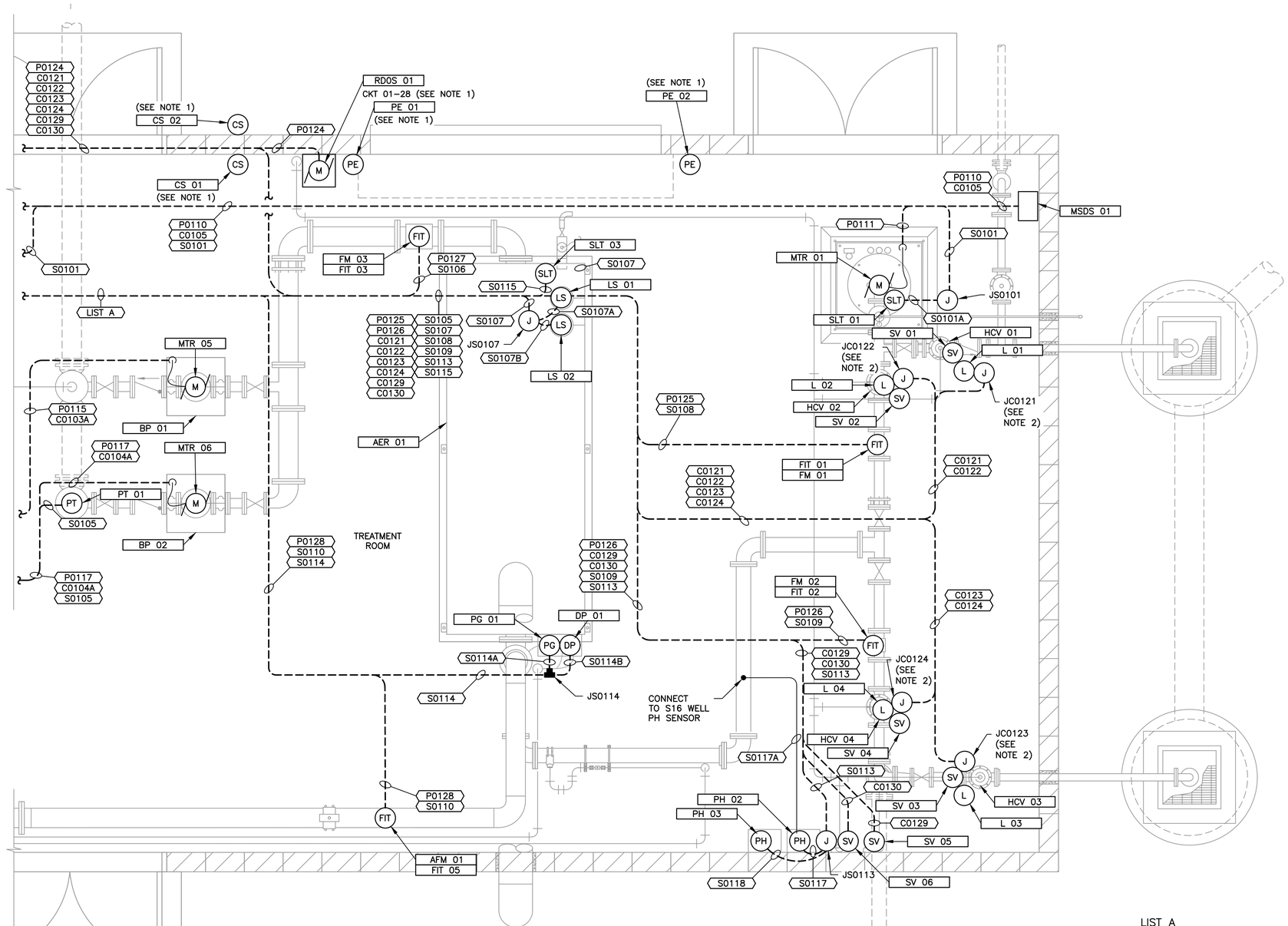

CONTINUED ON E-7A,
BUILDING S15R, SOUTH – POWER,
CONTROL AND INSTRUMENTATION PLAN

NOTES:

1. PROVIDE AND INSTALL 120V, 30A, NEMA 12 DISCONNECT PER MANUFACTURER'S DOCUMENTATION AND EXTEND CIRCUIT TO [RDOS 01]. CONDUIT NUMBERS ARE NOT PROVIDED FOR [RDOS 01] ANCILLARY EQUIPMENT. PROVIDE CONDUITS PER THE SPECIFICATIONS, 3/4" MINIMUM, AND CONDUCTORS/CABLES PER MANUFACTURER'S DOCUMENTATION.

2. FOR CLARITY, WIRING BETWEEN JUNCTION BOXES JC0121–JC0124 AND SOLENOID VALVES AND LIMIT SWITCHES IS NOT SHOWN. REFERENCE CABLE AND CONDUIT SCHEDULE.

LIST A

P0125	S0106	S0110
P0126	S0107	S0113
P0127	S0108	S0114
P0128	S0109	S0115

1 / –
BUILDING S15R, NORTH - POWER, CONTROL, AND INSTRUMENTATION PLAN
SCALE: 1/2"=1'-0"

0 1" 2"
TWO INCHES AT FULL SCALE.
IF NOT, SCALE ACCORDINGLY

Gray & Osborne, Inc.
CONSULTING ENGINEERS
1130 RAINIER AVENUE SOUTH, SUITE 300
SEATTLE, WASHINGTON 98144

DATE: SEPT 2022	DRAWN: PEB	CHECKED: PAM	APPROVED: MBS

No.	REVISION	DATE	APPD

MICHAEL B. SWEENEY
STATE OF WASHINGTON
22009
PROFESSIONAL ENGINEER
9-26-22

CITY OF LACEY
THURSTON COUNTY WASHINGTON
BEACHCREST WELLFIELD pH IMPROVEMENTS
BUILDING S15R, NORTH - POWER, CONTROL AND INSTRUMENTATION PLAN

SHEET: **E-7B**
SHEET: **53 of 81**
JOB NO.: 19520
DWG:E_BLDG

L:\LACEY\19520 pH Predesign and S17 Facilities Design\PLANSET\E-Sheets\E_BLDG.dwg, 9/26/2022 1:23 PM, LIZ BATES

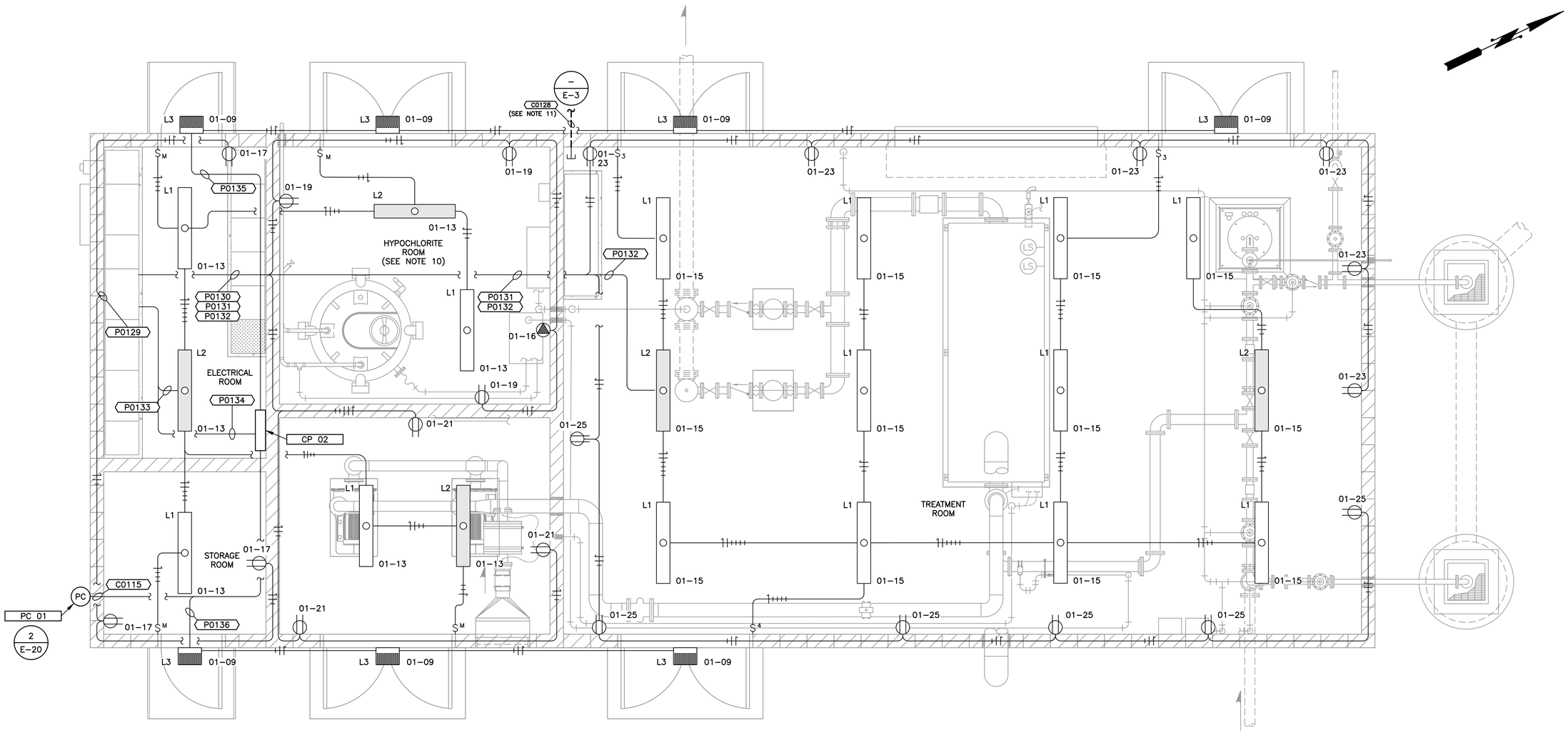

NOTES:

1. ALL EXPOSED CONDUITS SHALL BE RGS. CONDUIT IN ATTIC MAY BE SCHEDULE 40 PVC.
2. CONDUIT NUMBERS FOR CONVENIENCE RECEPTACLE AND LIGHTING CIRCUITS ARE ONLY APPLIED TO THE CONDUIT LEAVING THE POWER SOURCE. CONDUITS BETWEEN DEVICES ARE REQUIRED AND ARE NOT SHOWN IN THE CABLE AND CONDUIT SCHEDULE.
3. ALL INTERIOR CONVENIENCE RECEPTACLES SHALL BE 20A, WHITE, GFCI, DUPLEX, IN CAST ALUMINUM BOXES WITH WEATHERPROOF COVERS. RECEPTACLES MOUNTED TO CONCRETE OR CMU WALLS SHALL BE SURFACE-MOUNTED.
4. ALL DEDICATED RECEPTACLES SHALL BE 20A, GRAY, SIMPLEX, NON-GFCI, IN CAST ALUMINUM BOXES WITH WEATHERPROOF COVERS. THEY SHALL BE LABELED FOLLOWING SPECIFICATION 16140.
5. ALL INTERIOR RECEPTACLES SHALL BE MOUNTED 42 INCHES ABOVE THE FLOOR.
6. WHERE APPROPRIATE ROUTE CONDUITS IN THE ATTIC.
7. EXPOSED CONDUITS TO CONVENIENCE RECEPTACLES AND LIGHT SWITCHES MAY BE 1/2-INCH TRADE SIZE WHERE ALLOWED BY CODE.
8. THE POWER CONDUCTORS TO LIGHTING BATTERY BACKED CHARGING CIRCUIT SHALL NOT BE SWITCHED.
9. JUNCTION BOXES ARE NOT SHOWN, PROVIDE JUNCTION BOXES AS NEEDED.
10. HYPOCHLORITE ROOM IS CONSIDERED CORROSIVE, ALL CONDUIT SHALL BE PVC-RGS, ALL MOUNTING HARDWARE SHALL BE 304 STAINLESS STEEL (MINIMUM), AND ALL RECEPTACLE AND LIGHT SWITCH FACEPLATES SHALL BE 304 STAINLESS STEEL (MINIMUM).
11. COORDINATE WITH THE OWNER AND THE GENERAL CONTRACTOR ON THE FINAL LOCATION OF THE IRRIGATION CONTROLLER. ROUTE ASSOCIATED CONDUIT CO128 TO STUB UP UNDER THE IRRIGATION CONTROLLER.

LIGHTING SCHEDULE

TYPE	TECHNOLOGY	APPLICATION	BB*	DESCRIPTION	MANUFACTURER		INPUT (VA)	VOLTAGE	COMMENTS
					NAME	SERIES NO.			
L1	LED	WET, CEILING/OVERHEAD	NO	8" X 48", RECTANGULAR.	HOLOPHANE	EVT4	33	120 VAC, 1 PH	4000 LUMENS, 4000 K COLOR, MEDIUM DISTRIBUTION,FROSTED LENS, WET APPLICATION. FIXTURES LOCATED IN THE TREATMENT ROOM SHALL BE PROVIDED WITH INTEGRAL MOTION SENSOR FOR ON/OFF OPERATION.
L2	LED	WET, CEILING/OVERHEAD	YES	8" X 48", RECTANGULAR, BATTERY-BACKED.	HOLOPHANE	EVT4	33	120 VAC, 1 PH	4000 LUMENS, 4000 K COLOR, MEDIUM DISTRIBUTION,FROSTED LENS, WET APPLICATION. FIXTURES LOCATED IN THE TREATMENT ROOM SHALL BE PROVIDED WITH INTEGRAL MOTION SENSOR FOR ON/OFF OPERATION.
L3	LED	WET, WALL-MOUNT, BUILDING	NO	EXTERIOR BUILDING LIGHT.	LITHONIA	DSXW1 LED	40	120 VAC, 1 PH	3059 LUMENS, 4000 K COLOR, 10 LEDS (ONE ENGINE), 1000 MA DRIVE CURRENT, WITH VANDAL GUARD. 13-3/4" W X 10" D X 6-3/8" H.

* = BATTERY BACKED LIGHTING FIXTURES

1 / – **BUILDING S15R LIGHTING AND RECEPTACLE PLAN**
SCALE: 3/8"=1'-0"

0 1" 2"
TWO INCHES AT FULL SCALE. IF NOT, SCALE ACCORDINGLY

Gray & Osborne, Inc.
CONSULTING ENGINEERS
1130 RAINIER AVENUE SOUTH, SUITE 300
SEATTLE, WASHINGTON 98144

DATE: SEPT 2022
DRAWN: PEB
CHECKED: PAM
APPROVED: MBS

No.	REVISION	DATE	APPD

MICHAEL B. SWEENEY — STATE OF WASHINGTON — 45229 — REGISTERED PROFESSIONAL ENGINEER — 9-26-22

CITY OF LACEY
THURSTON COUNTY WASHINGTON
BEACHCREST WELLFIELD pH IMPROVEMENTS
BUILDING S15R LIGHTING AND RECEPTACLE PLAN

SHEET: E-8
SHEET: 54 of 81
JOB NO.: 19520
DWG:E_BLDG

L:\LACEY\19520 pH Predesign and S17 Facilities Design\PLANSET\E-Sheets\E_BLDG.dwg, 9/26/2022 1:24 PM, LIZ BATES

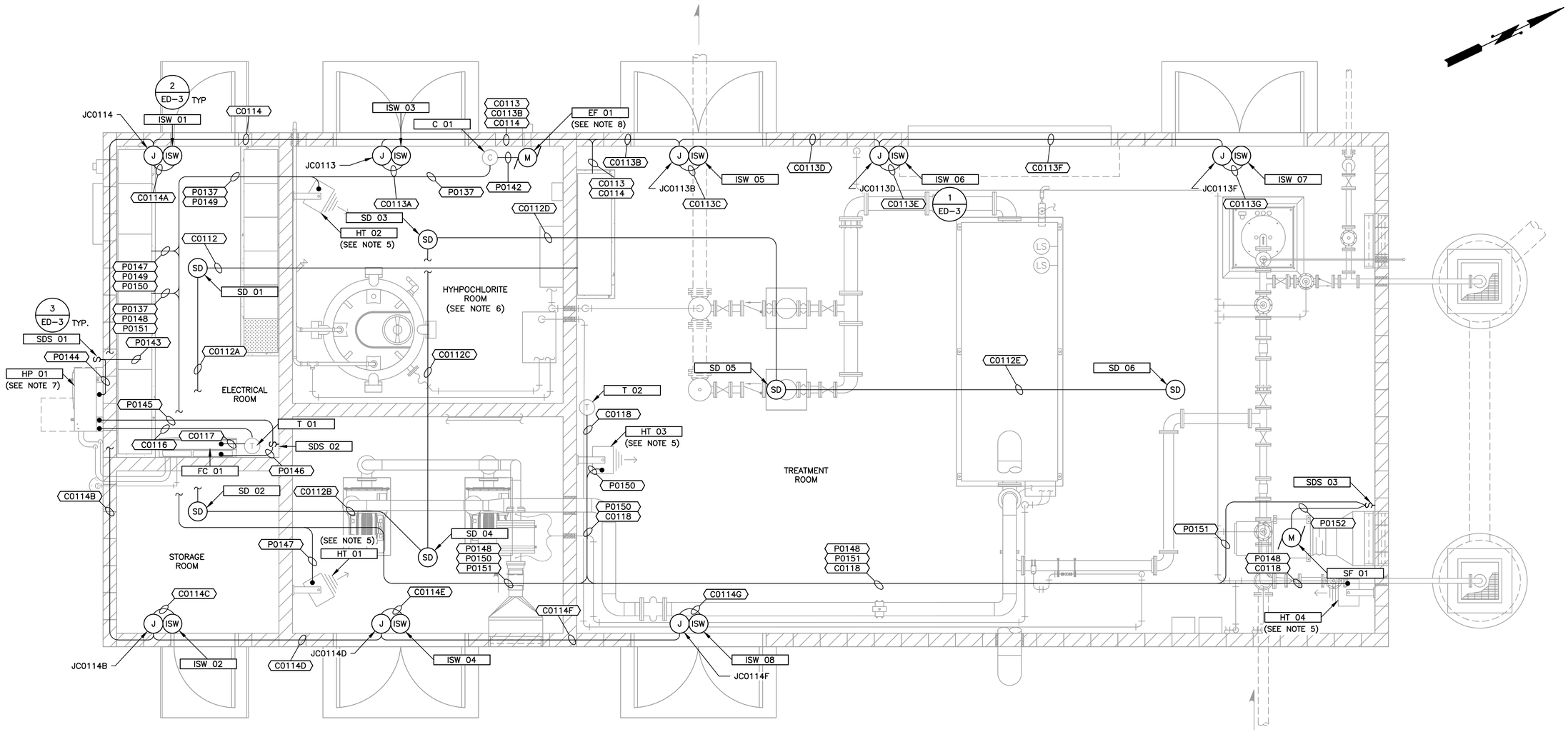

NOTES:

1. ALL EXPOSED CONDUITS SHALL BE RGS. CONDUIT IN ATTIC MAY BE SCHEDULE 40 PVC.
2. INTRUSION SWITCH CIRCUITS SHALL BE 24 VDC, EACH WIRED SEPARATELY TO THE MAIN CONTROL PANEL.
3. INTRUSION SWITCHES SHALL BE WIRED SUCH THAT THEY ARE OPEN–CIRCUITED WHEN THE DOOR IS OPEN, CLOSED WHEN THE DOOR IS CLOSED.
4. SMOKE DETECTORS SHALL BE 24 VDC POWERED WITH FORM C (DRY) CONTACTS. WIRE THE CONTACTS TO BE OPEN WHEN IN THE ALARM CONDITION, CLOSED UNDER NORMAL CONDITIONS.
5. HEATERS SHALL INCLUDE INTEGRAL SAFETY DISCONNECT SWITCHES.
6. HYPOCHLORITE ROOM IS CONSIDERED CORROSIVE, ALL CONDUIT SHALL BE PVC–RGS, ALL MOUNTING HARDWARE SHALL BE 304 STAINLESS STEEL (MINIMUM), AND ALL JUNCTION BOXES AND ENCLOSURES SHALL BE 304 STAINLESS STEEL (MINIMUM).
7. HEAT PUMP HAS AN INTERNAL AND EXTERNAL COMPONENT. MAKE ALL MANUFACTURER REQUIRED CONNECTIONS BETWEEN THE TWO UNITS.
8. CONNECT POWER TO EXHAUST FAN THROUGH CONTROL TIMER PROVIDED BY HVAC; SEE H–SHEETS. PROGRAM TIMER PER MANUFACTURER'S REQUIREMENTS AND HVAC FAN SCHEDULE.

1 / –
BUILDING S15R HVAC, FIRE AND SECURITY PLAN
SCALE: 3/8"=1'–0"

0 1" 2"
TWO INCHES AT FULL SCALE.
IF NOT, SCALE ACCORDINGLY

Gray & Osborne, Inc.
CONSULTING ENGINEERS
1130 RAINIER AVENUE SOUTH, SUITE 300
SEATTLE, WASHINGTON 98144

DATE: SEPT 2022
DRAWN: PEB
CHECKED: PAM
APPROVED: MBS

No.	REVISION	DATE	APPD

MICHAEL B. SWEENEY
STATE OF WASHINGTON
REGISTERED PROFESSIONAL ENGINEER
9-26-22

CITY OF LACEY
THURSTON COUNTY WASHINGTON
BEACHCREST WELLFIELD pH IMPROVEMENTS
BUILDING S15R HVAC, FIRE AND SECURITY PLAN

SHEET: E-9
SHEET: 55 of 81
JOB NO.: 19520
DWG:E_BLDG

L:\LACEY\19520 pH Predesign and S17 Facilities Design\PLANSET\E-Sheets\E_BLDG.dwg, 9/26/2022 1:24 PM, LIZ BATES

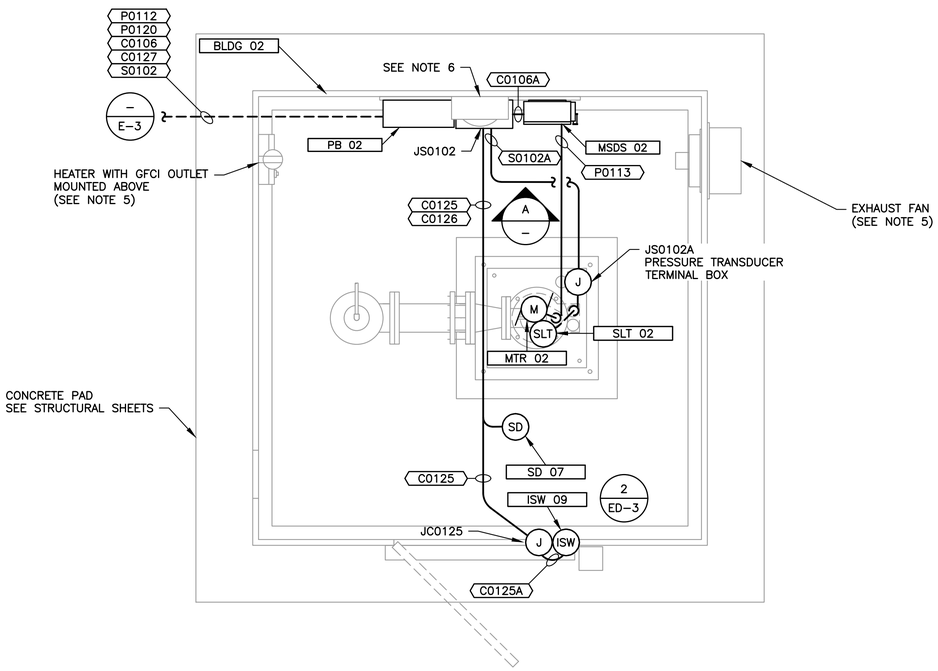

S16 ELECTRICAL PLAN

1 / –

SCALE: 3/4"=1'-0"

NOTES:

1. SEE NOTES ON E-1.
2. NOT USED.
3. JUNCTION BOX JS0102A SHALL BE NEMA 1, 6" H x 6" W X 4" (MINIMUM).
4. ROUTE #6 AWG BARE COPPER GEC FROM [PB 01] TO [PB 02]. CONNECT GEC TO THE GEC IN [PB 01] AND ROUTE TO CONDUIT EXIT LOCATION AND THEN IN THE TRENCH TO [BLDG 02].
5. WIRE PRE-INSTALLED ELECTRICAL COMPONENTS TO PANELBOARD [PB 02] AS PER MANUFACTURER INSTRUCTIONS AND SPECIFICATION 16130.
6. FIXTURE IS 100W LED INTEGRAL TO PREFAB BUILDING.

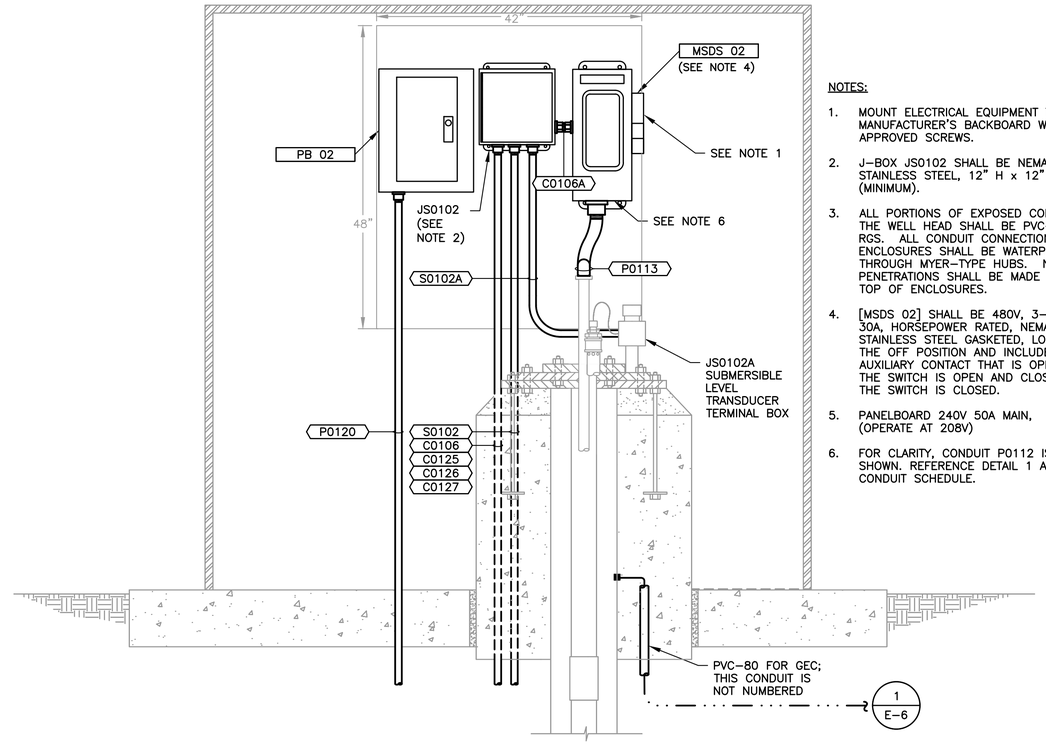

S16 PUMP CONTROL STATION [CS 02]

A / –

SCALE: 1" = 1'-0"

NOTES:

1. MOUNT ELECTRICAL EQUIPMENT TO MANUFACTURER'S BACKBOARD WITH APPROVED SCREWS.
2. J-BOX JS0102 SHALL BE NEMA 4X, 304 STAINLESS STEEL, 12" H x 12" W x 6" D (MINIMUM).
3. ALL PORTIONS OF EXPOSED CONDUIT AT THE WELL HEAD SHALL BE PVC-COATED RGS. ALL CONDUIT CONNECTIONS INTO ENCLOSURES SHALL BE WATERPROOF THROUGH MYER-TYPE HUBS. NO PENETRATIONS SHALL BE MADE INTO THE TOP OF ENCLOSURES.
4. [MSDS 02] SHALL BE 480V, 3-POLE, 30A, HORSEPOWER RATED, NEMA 4X, 304 STAINLESS STEEL GASKETED, LOCKABLE IN THE OFF POSITION AND INCLUDE AN AUXILIARY CONTACT THAT IS OPEN WHEN THE SWITCH IS OPEN AND CLOSED WHEN THE SWITCH IS CLOSED.
5. PANELBOARD 240V 50A MAIN, (OPERATE AT 208V)
6. FOR CLARITY, CONDUIT P0112 IS NOT SHOWN. REFERENCE DETAIL 1 AND THE CONDUIT SCHEDULE.

0 1" 2"

TWO INCHES AT FULL SCALE.
IF NOT, SCALE ACCORDINGLY

Gray & Osborne, Inc.
CONSULTING ENGINEERS
1130 RAINIER AVENUE SOUTH, SUITE 300
SEATTLE, WASHINGTON 98144

DATE: SEPT 2022	DRAWN: PEB
CHECKED: PAM	APPROVED: MBS

No.	REVISION	DATE	APPD

MICHAEL B. SWEENEY
STATE OF WASHINGTON
PROFESSIONAL ENGINEER
9-26-22

CITY OF LACEY
THURSTON COUNTY WASHINGTON
BEACHCREST WELLFIELD pH IMPROVEMENTS
S16 ELECTRICAL PLAN AND DETAILS

SHEET: E-10
SHEET: 56 of 81
JOB NO.: 19520
DWG:E_WELL16_BLDG

L:\LACEY\19520 pH Predesign and S17 Facilities Design\PLANSET\E-Sheets\E_Well16_BLDG.dwg, 9/26/2022 1:25 PM, LIZ BATES

PANELBOARD [PB 01] SCHEDULE

	CKT. NO.	DIRECTORY	PHASE A VA	PHASE A A	PHASE B VA	PHASE B A	PHASE C VA	PHASE C A	LOAD TYPE	BKR AMPS	BUS	BKR AMPS	LOAD TYPE	PHASE A VA	PHASE A A	PHASE B VA	PHASE B A	PHASE C VA	PHASE C A	DIRECTORY	CKT. NO.
	1	[PB 02], PANELBOARD 208/120V, WELL S16 ENCLOSURE	600	5.8					Z	2/50	A	1/20	Z	1,080	9.0					[CP 01], CONTROL PANEL, MAIN	2
	3	[PB 02], PANELBOARD 208/120V, WELL S16 ENCLOSURE			600	5.8			Z	|	B	1/20	Z			–	–			SPARE BREAKER	4
	5	SPARE BREAKER					–	–	Z	1/20	C	1/20	Z					–	–	SPARE BREAKER	6
	7	SPARE BREAKER	–	–					Z	1/20	A	2/20	Z	1,100	10.6					[GADP 01], AUXILIARY DEVICE PANEL, AUXILIARY GENERATOR	8
	9	[CP 02], CONTROL PANEL, EXTERIOR LIGHTING			359	3.0			L	1/20	B	|	Z			1,100	10.6			[GADP 01], AUXILIARY DEVICE PANEL, AUXILIARY GENERATOR	10
	11	SPARE BREAKER					–	–	Z	1/20	C	1/20	M					1,840	16.0	[GO 01], MOTORIZED GATE OPERATOR NO. 1, ENTRANCE	12
	13	INTERIOR LIGHTING, ELECTRICAL ROOM, CHLORINE ROOM, AND BLOWER ROOM	231	1.9					L	1/20	A	1/20	M	1,840	16.0					[GO 02], MOTORIZED GATE OPERATOR NO. 2, EXIT	14
	15	INTERIOR LIGHT, TREATMENT ROOM			396	3.3			L	1/20	B	1/20	R			360	3.0			DEDICATED RECEPTACLES, CHLORINE ROOM GFCI	16
	17	RECEPTACLES, ELECTRICAL ROOM					540	4.5	R	1/20	C	1/20	Z					–	–	SPARE BREAKER GFCI	18
GFCI	19	RECEPTACLES, CHLORINE ROOM	540	4.5					R	1/20	A	1/20	Z	–	–					SPARE BREAKER	20
	21	RECEPTACLES, BLOWER ROOM			540	4.5			R	1/20	B	1/20	Z			–	–			SPARE BREAKER	22
GFCI	23	RECEPTACLES, EAST TREATMENT ROOM					1,080	9.0	R	1/20	C	1/20	H					62	0.5	[EF 01], EXHAUST FAN NO. 1	24
GFCI	25	RECEPTACLES, WEST TREATMENT ROOM	1,080	9.0					R	1/20	A	1/20	H	1,587	13.2					[SF 01], SUPPLY FAN	26
	27	[HP 01], HEAT PUMP AND [FC 01] FAN COIL			2,080	20.0			H	2/25	B	1/20	M			1,127	9.8			[RDOS 01], ROLLUP DOOR OPERATOR SYSTEM	28
	29	[HP 01], HEAT PUMP AND [FC 01] FAN COIL					2,080	20.0	H	|	C	1/15	R					180	1.5	[CEP 02], COMMUNICATION EQUIPMENT POLE NO. 2 GFCI	30
	31	SPARE BREAKER	–	–					Z	2/35	A	1/20	Z	–	–					SPARE BREAKER	32
	33	SPARE BREAKER			–	–			Z	|	B	1/20	Z			–	–			SPARE BREAKER	34
	35	SPARE BREAKER					–	–	Z	1/20	C	1/20	Z					–	–	SPARE BREAKER	36
	37	SPARE BREAKER	–	–					Z	1/20	A	1/20	Z	–	–					SPARE BREAKER	38
GFCI	39	SPARE BREAKER			–	–			Z	2/20	B	1/20	Z			–	–			SPARE BREAKER GFCI	40
GFCI	41	SPARE BREAKER					–	–	Z	|	C	1/20	Z					–	–	SPARE BREAKER GFCI	42
		SUM OF PHASE LOADS	2,451	21.2	3,975	36.6	3,700	33.5						5,607	48.8	2,587	23.4	2,082	18.0	**SUM OF PHASE LOADS**	

[PB 01] ELECTRICAL AND CONSTRUCTION SPECIFICATIONS:

CONFIGURATION:	208/120 VAC, 3 PH, 60 Hz
POWER BUS:	225 A, COPPER
NEUTRAL BUS:	225 A (100% OF POWER BUS), ISOLATED FROM GROUND, SOLDERLESS CONNECTIONS
GROUND BUS:	PROVIDE PER UL 67
BUS BRACING:	22 kAIC, MINIMUM
MAIN BREAKER:	150 AT, 225 AF, 3 PH, 3 P, 22 kAIC, MOLDED CASE, VERTICAL MOUNTING
DISTRIBUTION BREAKERS:	BOLT–ON, MOLDED CASE, 22 kAIC, MINIMUM
GROUND BONDING:	SUITABLE FOR SERVICE ENTRY
ENCLOSURE:	NEMA 1 GASKETED
NUMBER OF CIRCUITS:	42
UNCOMMITTED CIRCUITS:	FILL WITH SPARE 22 kAIC BREAKERS AS SHOWN IN THE SCHEDULE
POWER DERIVED FROM:	[XFMR 01], TRANSFORMER 45 KVA
BUS BREAKERS:	2 POLE BREAKERS, 1x 50 A, 22 kAIC
	2 POLE BREAKERS, 1x 35 A, 22 kAIC
	2 POLE BREAKERS, 1x 25 A, 22 kAIC
	2 POLE BREAKERS, 2x 20 A, 22 kAIC
	1 POLE BREAKERS, 32x 20 A, 22 kAIC

NOTES:

1. THE CONTRACTOR SHALL PROVIDE A TYPED PANELBOARD SCHEDULE FOR ALL ACTUAL LOAD ASSIGNMENTS.
2. AIC RATING OF BRANCH CIRCUIT BREAKERS MAY BE REDUCED WHEN SUBMITTED TO ENGINEERING IF THEY ARE SHOWN TO BE PART OF A TESTED AND LISTED COMBINATION WITH MAIN PANELBOARD BREAKER AND COMPLIANT TO NEC 240.86 AND MARKED PER NEC 110.22. BRANCH BREAKERS SHALL BE NO LESS THAN 10 kAIC.

LEGEND:

GFCI DENOTES GFCI PANELBOARD CIRCUIT BREAKER.

LOAD DISTRIBUTION:	AMPS	VA	%
BY PHASE:			
TOTAL LOAD, PHASE A:	70.0 A	8,058 VA	38.6%
TOTAL LOAD, PHASE B:	59.9 A	6,562 VA	33.0%
TOTAL LOAD, PHASE C:	51.5 A	5,782 VA	28.4%
BY LOAD TYPE:			
TOTAL LIGHTING (L):		986 VA	4.8%
TOTAL MOTOR (M):		4,807 VA	23.6%
TOTAL HVAC (H):		5,809 VA	28.5%
TOTAL RECEPTACLE (R):		4,320 VA	21.2%
TOTAL OTHER (Z):		4,480 VA	22.0%
TOTAL CONNECTED LOAD:		20.40 kVA	100.0%
TOTAL CALCULATED (NEC) LOAD:		21.11 kVA	

Gray & Osborne, Inc.
CONSULTING ENGINEERS
1130 RAINIER AVENUE SOUTH, SUITE 300
SEATTLE, WASHINGTON 98144

DATE: SEPT 2022 | DRAWN: PEB | CHECKED: PAM | APPROVED: MBS

No.	REVISION	DATE	APPD

MICHAEL B. STEENEY — STATE OF WASHINGTON — 45525 — PROFESSIONAL ENGINEER — 9-26-22

CITY OF LACEY
THURSTON COUNTY WASHINGTON
BEACHCREST WELLFIELD pH IMPROVEMENTS
[PB 01] SCHEDULE, SPECIFICATIONS AND LOAD DISTRIBUTION

SHEET: E-11
SHEET: 57 of 81
JOB NO.: 19520
DWG:E_PB_342

L:\LACEY\19520 pH Predesign and S17 Facilities Design\PLANSET\E-Sheets\E_PB_342.dwg, 9/26/2022 1:25 PM, LIZ BATES

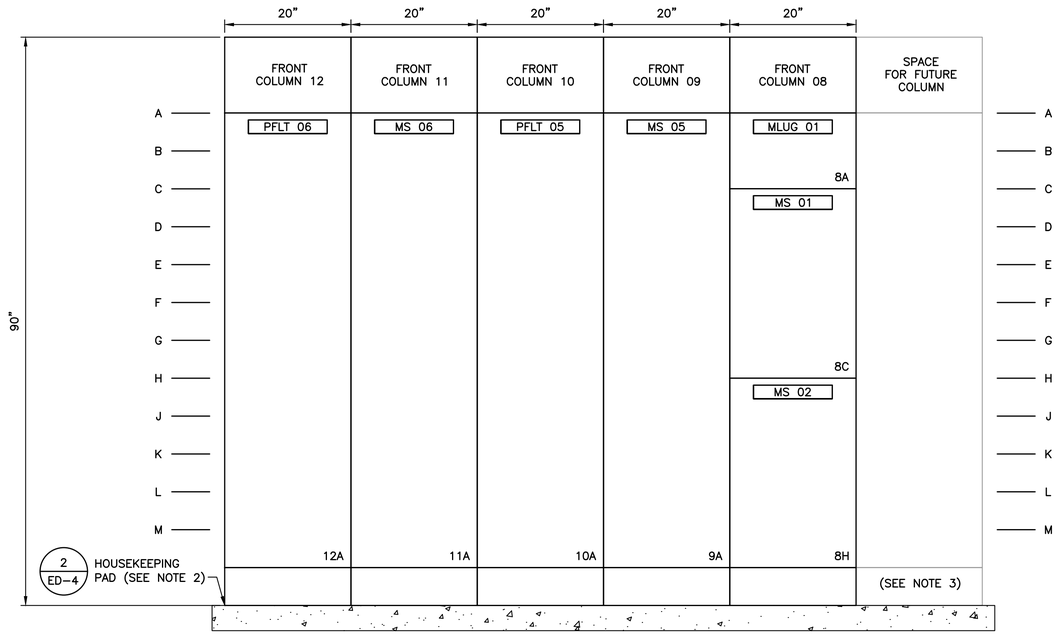

1 / – [MCCN 01] ELEVATION

SCALE: 1" = 1'-0"

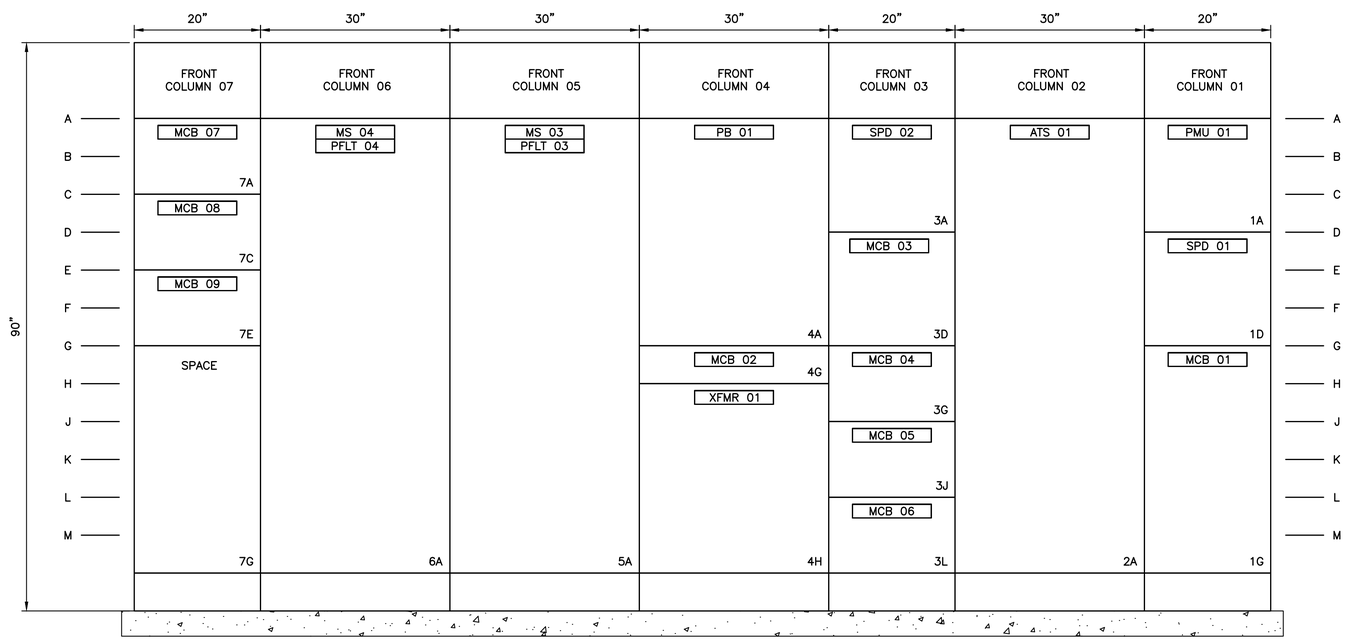

2 / – [MCCS 01] ELEVATION

SCALE: 1" = 1'-0"

MOTOR CONTROL CENTER [MCCN 01 AND MCCS 01]

ELECTRICAL AND CONSTRUCTION SPECIFICATION REQUIREMENTS

BUS MATERIAL:	COPPER, TIN-PLATED (ALL BUSES)
VOLTAGE RATING:	600 VAC
CONFIGURATION:	480 VAC, 3 PH, 60 Hz, 3 W + GROUND
MAIN BUS:	600 A, HORIZONTAL, SLEEVE-WRAP INSULATED
ENTRY COLUMN VERTICAL BUS:	600 A
OTHER VERTICAL BUS:	300 A (MINIMUM), SIZE FOR COLUMN LOAD
GROUND BUS:	300 A (50% OF MAIN BUS), HORIZONTAL
BUS BRACING:	42 kAIC
WIRING:	CLASS 2B
CONTROL WIRING:	#14 AWG, MTW

MCC PHYSICALS

STRUCTURE:	SINGLE SIDED, NEMA 1 GASKETED
SERVICE ENTRY LOCATION:	BOTTOM, RIGHT COLUMN

MCC OPTIONS

NEUTRAL BUS:	NO
SURGE PROTECTIVE DEVICE:	YES; 240 kA, 3 PH, WITH STATUS LIGHTS, OCPD, AND FORM A "FAULT" CONTACT
POWER MONITOR UNIT:	YES; 3 PH
MAIN DISCONNECT BREAKER:	YES; 400 AT, 400 AF, 480 VAC, 3 PH, 42 kAIC, 2 TERMINALS / PH, SUSE RATED
AUTOMATIC TRANSFER SWITCH:	YES; 400 A, 480 VAC, 3 PH, 3 P, 60 Hz, 42 kAIC, NO NEUTRAL SWITCHING

MOTOR CONTROL CENTER [MCCN 01 AND MCCS 01] SCHEDULE

SECTION	UNIT	DESCRIPTION (NAMEPLATE)	TAG ID NO.	NOTES
01	A	POWER MONITORING UNIT	PMU 01	
01	D	SURGE PROTECTIVE DEVICE	SPD 01	
01	G	MCC CIRCUIT BREAKER, MAIN	MCB 01	
02	A	AUTOMATIC TRANSFER SWITCH	ATS 01	
03	A	SURGE PROTECTIVE DEVICE	SPD 02	
03	D	MCC CIRCUIT BREAKER, NORTH WALL MOTOR CONTROL CENTER	MCB 03	
03	G	MCC CIRCUIT BREAKER, HEATER [HT 01], 3KW	MCB 04	
03	J	MCC CIRCUIT BREAKER, HEATER [HT 02], 3KW	MCB 05	
03	L	MCC CIRCUIT BREAKER, HEATER [HT 03], 3KW	MCB 06	
04	A	PANELBOARD 208/120V, WELL S15R BUILDING	PB 01	
04	G	MCC CIRCUIT BREAKER, TRANSFORMER 30KW	MCB 02	
04	H	TRANSFORMER 30KW	XFMR 01	
05	A	MOTOR STARTER, AERATION BLOWER NO. 1 PASSIVE FILTER, AERATION BLOWER NO. 1	MS 03 PFLT 03	
06	A	MOTOR STARTER, AERATION BLOWER NO. 2 PASSIVE FILTER, AERATION BLOWER NO. 2	MS 04 PFLT 04	
07	A	MCC CIRCUIT BREAKER, HEATER [HT 04], 3KW	MCB 07	
07	C	MCC CIRCUIT BREAKER, WATER HEATER [WH 01], 20KW	MCB 08	
07	E	MCC CIRCUIT BREAKER, SPARE	MCB 09	
07	G	SPACE		
08	A	MCC LUGS, NORTH WALL MOTOR CONTROL CENTER	MLUG 01	
08	C	MOTOR STARTER, WELL PUMP S15R	MS 01	
08	H	MOTOR STARTER, WELL PUMP S16	MS 02	
09	A	MOTOR STARTER, BOOSTER PUMP NO. 1	MS 05	
10	A	PASSIVE FILTER, BOOSTER PUMP NO. 1	PFLT 05	
11	A	MOTOR STARTER, BOOSTER PUMP NO. 2	MS 06	
12	A	PASSIVE FILTER, BOOSTER PUMP NO. 2	PFLT 06	

NOTES:

1. SECURE [MCCN 01] AND [MCCS 01] TO THE WALL WITH A SPACING AS SHOWN ON 2 / ED-4.
2. EXTEND PAD TO WALL.
3. HOUSEKEEPING PAD SHALL BE SIZED FOR A MINIMUM OF 1 ADDITIONAL MCC COLUMN. COVER THE EXTENDED PAD WITH DIAMOND PLATE. 1 / ED-4

Gray & Osborne, Inc.
CONSULTING ENGINEERS
1130 RAINIER AVENUE SOUTH, SUITE 300
SEATTLE, WASHINGTON 98144

DATE: SEPT 2022	DRAWN: PEB	CHECKED: PAM	APPROVED: MBS

No.	REVISION	DATE	APPD

MICHAEL B. SWEENEY
STATE OF WASHINGTON
PROFESSIONAL ENGINEER
9-26-22

CITY OF LACEY
THURSTON COUNTY WASHINGTON
BEACHCREST WELLFIELD pH IMPROVEMENTS
MCCN AND MCCS ELEVATIONS

SHEET: E-12
SHEET: 58 of 81
JOB NO.: 19520
DWG:E_MCCEL

L:\LACEY\19520 pH Predesign and S17 Facilities Design\PLANSET\E-Sheets\E_MCCEL.dwg, 9/26/2022 1:26 PM, LIZ BATES

MOTOR STARTER GENERAL NOTES:

G.1. REFERENCE MOTOR STARTER AND CONTROL PANEL SPECIFICATIONS.

G.2. METAL OXIDE VARISTORS SHALL PARALLEL EACH 120 VAC CONTROL RELAY, TIMER COIL, AND SOLENOID VALVE. REVERSE–BIASED DIODES SHALL PARALLEL EACH 24 VDC CONTROL RELAY.

G.3. ALL PILOT LIGHTS SHALL BE PUSH–TO–TEST LED STYLE. REFERENCE THE "PILOT LIGHT COLOR TABLE" ON THIS SHEET.

G.4. THE "POWER–UP DELAY" TIMER DISABLES THE DRIVE FOLLOWING A POWER UP TO ALLOW DRIVES TO CHARGE UP, REBOOT, AND STABILIZE BEFORE BEING PLACED INTO OPERATION. THESE DELAYS ARE OFFSET BETWEEN DRIVES TO ELIMINATE THE POSSIBILITY OF STARTING MULTIPLE MOTORS SIMULTANEOUSLY WHEN POWERED UP IN "HAND".

G.5. PROVIDE AN ELECTRO–MECHANICAL ELAPSED TIME METER AND MOTOR START COUNTER ON A SINGLE METER PER SPECIFICATION.

G.6. SIZE STARTER CONTROL TRANSFORMERS TO HANDLE ALL DRIVE/STARTER CONTROL DEVICES AS PER REFERENCED ELEMENTARY WIRING DIAGRAMS PLUS 25%. UPSIZE FOR REMOTE PANEL HEATERS, PILOT LIGHTS, SOLENOID VALVES, INTRINSICALLY SAFE BARRIERS, COOLING FANS, AND ETC. WHERE APPLICABLE.

G.7. ALL MOTOR STARTER CONTROLLERS SHALL BE CONFIGURED TO RESET FROM A DOOR–MOUNTED STANDARD PUSHBUTTON – NOT FROM A MANUFACTURER'S CONTROL MODULE. PROVIDE A SEPARATE RESET PUSHBUTTON ON THE STARTER DOOR FOR THIS PURPOSE.

G.8. MCC MANUFACTURER SHALL SIZE AND SET MOTOR STARTER BREAKERS AND MOTOR OVERLOAD PROTECTION DEVICES BASED ON NEC AND MOTOR MANUFACTURER'S REQUIREMENTS.

G.9. PROVIDE A SELECTOR SWITCH LOCATION STICKER AS SHOWN BELOW ON THOSE MOTOR STARTER DOORS SO INDICATED IN THEIR MOTOR STARTER ELEMENTARY DIAGRAMS.

G.10. PROVIDE A TIMER ISOLATION RELAY FOR THOSE TDAD TIMERS THAT REQUIRE AN ISOLATED TRIGGER.

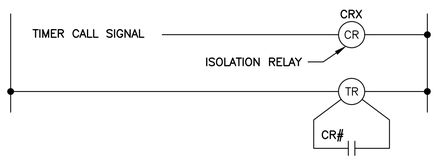

VFD SPECIFIC NOTES, NETWORKED:

V.1. THE VFD SHALL PROVIDE THE FOLLOWING STATUS CONDITIONS TO THE NETWORK:

INTERNAL PROTECTION	MOTOR/DRIVE DATA	MOTOR DATA (CONT.)
THERMAL OVERLOAD	MOTOR SPEED (Hz)	REAL POWER (kW)
DRIVE FAULT	MOTOR AVERAGE CURRENT	MOTOR POWER FACTOR
UNDER–VOLTAGE (L–L)	MOTOR AVERAGE VOLTAGE	DC BUS VOLTAGE
OVER–VOLTAGE (L–L)		

V.2. THE DRIVE SHALL BE DISABLED, AND THE FAULT STATUS OUTPUT MADE TRUE, ON ANY COMBINATION OF "INTERNAL PROTECTION" CONDITIONS LISTED IN NOTE V.1.

V.3. VFD PROGRAMMING REQUIREMENTS:

V.3.1. PROGRAM FOR AUTO RESET
V.3.2. PROGRAM RAMP RATES AND MIN/MAX SPEED LIMITS PER SPECIFICATION.
V.3.3. PROGRAM TO NOT OPERATE BELOW MINIMUM OR ABOVE MAXIMUM SPEED LIMITS.
V.3.4. PROGRAM FOR BUMPLESS TRANSFER BETWEEN AUTO AND MANUAL MODES.
V.3.5. PROGRAM FORWARD SPEED ONLY.
V.3.6. PROGRAM RUN CONTROL, SPEED CONTROL, AND "STARTER READY" LOGIC PER THE "INTERNAL LOGIC DETAIL" DIAGRAMS ASSOCIATED WITH EACH STARTER.

V4. THE HIM SHALL BE MOUNTED ON THE STARTER DOOR. PROVIDE ALL CABLING, HARDWARE, AND CONNECTORS FOR DOOR MOUNT PER SPECIFICATION. HIM CABLES SHALL BE PHYSICALLY SEPARATED FROM 120 VAC CIRCUITS BY A MINIMUM OF 6 INCHES IN ALL PLACES.

V.5. THE PIN FUNCTIONS SHOWN IN THESE MOTOR ELEMENTARY WIRING DIAGRAMS ARE TYPICAL AND MAY NOT REPRESENT ALL APPROVED MANUFACTURERS. SELECTED MANUFACTURERS SHALL SUBMIT ELECTRICAL WIRING DIAGRAMS SHOWING DETAILED CONNECTIONS AND INTERNAL LOGIC THAT FOLLOW THE DESIGN INTENT AND OPERATION OF THOSE SHOWN HEREIN. MODIFICATIONS OR COMPROMISES TO THE DESIGN FUNCTION WILL NOT BE ALLOWED WITHOUT WRITTEN APPROVAL FROM THE ENGINEER.

V.6. THE DRIVE MANUFACTURER SHALL SIZE AND PROVIDE ENCLOSURE COOLING FANS, THERMOSTAT AND ASSOCIATED CONTROL LOGIC AS SHOWN. THE ENCLOSURE THERMOSTAT SHALL BE FACTORY SET BY THE MANUFACTURER.

V.7. PROVIDE A SEPARATE DRIVE RESET PUSHBUTTON ON THE STARTER DOOR PER SPECIFICATION (DRIVE RESET SHALL NOT BE INTEGRATED INTO THE HIM).

V.8. THE DRIVE MANUFACTURER SHALL SIZE LINE AND LOAD REACTORS FOR STABLE MOTOR OPERATION AND COMPLIANCE WITH IEEE 519–2014 FOR EACH SPECIFIC MOTOR APPLICATION. REFERENCE MOTOR STARTER SPECIFICATIONS.

V.9. SPEED POTS SHALL BE SINGLE–TURN, 10k OHMS, MOUNTED ON THE FRONT DOOR.

V.10. IF REQUIRED, EXTENDED I/O MODULES SHALL PLUG DIRECTLY INTO THE VFD DRIVES. SEPARATE POWER AND ETHERNET CONNECTIONS SHALL NOT BE REQUIRED.

RVSS SPECIFIC NOTES:

R.1 THE RVSS DRIVE SHALL BE DISABLED, AND THE FAULT STATUS INDICATOR MADE, ON INTERNALLY SENSED THERMAL OVERLOAD OR DRIVE FAULT CONDITIONS.

R.2 THE MOTOR STARTER MANUFACTURER SHALL PROVIDE SEPARATE STATUS RELAYS FOR THE FULL VOLTAGE AND RUN STATUS CONDITIONS. REFERENCE SPECIFICATION 16420 AND THE DIAGRAM BELOW.

RVSS STATUS DIAGRAM

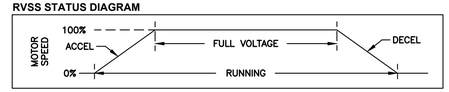

RUN = ACCEL + FULL VOLTAGE + DECEL

R.3 RVSS PROGRAMMING REQUIREMENTS:

R.3.1 PROGRAM FOR AUTO RESET
R.3.2 PROGRAM RAMP RATES PER SPECIFICATION.

R.4 THE HIM SHALL BE MOUNTED ON THE RVSS UNIT, NOT ON THE DOOR.

R.5 THE RVSS BYPASS POWER CONTACTOR SHALL BE RUN–RATED.

R.6 DRIVE MANUFACTURER SHALL SIZE AND PROVIDE ENCLOSURE COOLING FANS, THERMOSTAT AND ASSOCIATED CONTROL LOGIC AS SHOWN. THERMOSTAT SHALL BE FACTORY SET BY THE MANUFACTURER. ENCLOSURE FANS WILL NOT BE REQUIRED IF VERIFIED BY THE MANUFACTURER IN A WRITTEN LETTER DURING SUBMITTAL.

R.7 PROVIDE A SEPARATE DRIVE RESET PUSHBUTTON ON THE STARTER DOOR PER SPECIFICATION (DRIVE RESET SHALL NOT BE INTEGRATED INTO THE HIM).

R.8 THE HARDWIRED PHASE MONITOR RELAY AND ASSOCIATED PROTECTION CIRCUITS CAN BE ELIMINATED IF THE RVSS UNIT IS PROTECTED BY A MOTOR OVERLOAD PROTECTION (MOP) DEVICE THAT PROVIDES INTERNAL PHASE LOSS, PHASE REVERSAL, PHASE IMBALANCE, OVER–VOLTAGE, AND UNDER–VOLTAGE SENSING AND INCLUDES THESE CONDITIONS IN THE "DRIVE FAULT" OUTPUT.

R.9 THE DRIVE MANUFACTURER SHALL PROVIDE A 4–20 mA MOTOR CURRENT ANALOG SIGNAL DIRECTLY FROM THE RVSS UNIT UNLESS THE STARTER IS PROTECTED BY AN MOP DEVICE THAT PROVIDES NETWORKED MOTOR CURRENT OUTPUT.

R.10 REFERENCE OVERLOAD RELAY NOTES, OL.n.

OVERLOAD RELAYS, NOT NETWORKED, ELECTRONIC RELAY:

OL.1 THE OVERLOAD RELAY SHALL BE CONFIGURED TO TRIP THE STARTER ON THE FOLLOWING CONDITIONS:

TRIP ON:	TRIP ON:
THERMAL OVERLOAD	UNDER–VOLTAGE (L–L)
PHASE LOSS	OVER–VOLTAGE (L–L)
PHASE ROTATION	CURRENT IMBALANCE

OL.2 THE OVERLOAD RELAY SHALL INCLUDE A N.C. "DISABLE" OUTPUT AND A N.O. "FAULT" OUTPUT. THE DISABLE OUTPUT SHALL BE OPENED AND THE FAULT OUTPUT CLOSED ON ANY COMBINATION OF CONDITIONS IDENTIFIED IN NOTE OL.1. THIS "TRIPPED" STATUS SHALL BE MAINTAINED UNTIL THE OVERLOAD RELAY IS ELECTRICALLY OR MANUALLY RESET (SEE NOTE OL.4).

OL.3 THE OVERLOAD RELAYS SHOWN IN THESE MOTOR ELEMENTARY WIRING DIAGRAMS ARE TYPICAL AND MAY NOT REPRESENT ALL APPROVED MANUFACTURERS. SELECTED MANUFACTURERS SHALL SUBMIT ELECTRICAL WIRING DIAGRAMS SHOWING DETAILED CONNECTIONS THAT FOLLOW THE DESIGN INTENT AND OPERATION OF THOSE SHOWN HEREIN. MODIFICATIONS OR COMPROMISES TO THE DESIGN FUNCTION WILL NOT BE ALLOWED WITHOUT WRITTEN APPROVAL FROM THE ENGINEER.

OL.4 OVERLOAD RELAYS SHALL BE CONFIGURED TO RESET FROM TEMPORARY CLOSURE OF A DOOR–MOUNTED PUSHBUTTON, NOT FROM MANUFACTURER'S DOOR–MOUNTED CONTROL MODULES. PROVIDE A RESET PUSHBUTTON ON THE STARTER DOOR PER SPECIFICATION 16940.

OL.5 THE STARTER MANUFACTURER SHALL PROVIDE INDEPENDENT DRY CONTACTS CONNECTED TO A CONTROL OUTPUT TERMINAL STRIP WITH A COMMON CONNECTION AS SHOWN.

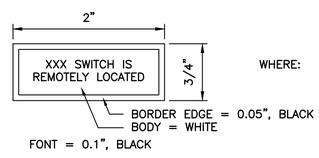

WHERE: XXX = HOA FOR HOA SWITCHES
XXX = ON–OFF FOR ON–OFF SWITCHES

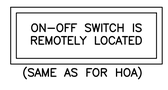

(SAME AS FOR HOA)

PILOT LIGHT COLOR TABLE

CONDITION / STATUS	PILOT COLOR
MOTOR RUNNING	GREEN
ANY FAULT OR ALARM	AMBER

SHADED DEVICES ON MOTOR STARTER ELEMENTARY WIRING DIAGRAMS ARE REMOTE FROM THE STARTER.

——— REFERS TO 120 VAC CONTROL WIRING
— — — REFERS TO 24 VDC CONTROL WIRING

MOTOR STARTER DESIGN SUMMARY

TAG	MOTOR STARTER FOR:	TYPE	HP	FLA	AMMETER *	SUBMER-SIBLE?	THERMAL PROTECTION	SEAL LEAK?	MSDS?	NET-WORKED?	I/P ADDRESS	BACK-UP LOGIC?	SELECTOR SWITCH TYPE **	AUTO CONTROL FROM...	NOTES
[MS 01]	WELL PUMP NO. S15R	RVSS	15	21	NA	YES	NO	NO	YES	YES	TBD	NO	3–POS, HOA, REMOTE	PLC	
[MS 02]	WELL PUMP NO. S16	RVSS	15	21	NA	YES	NO	NO	YES	YES	TBD	NO	3–POS, HOA, REMOTE	PLC	
[MS 03]	AERATION BLOWER NO. 1	VFD	15	21	NA	NO	YES	NO	YES	YES	TBD	NO	3–POS, HOA, REMOTE	PLC	
[MS 04]	AERATION BLOWER NO. 2	VFD	15	21	NA	NO	YES	NO	YES	YES	TBD	NO	3–POS, HOA, REMOTE	PLC	
[MS 05]	BOOSTER PUMP NO. 1	VFD	40	52	NA	NO	YES	NO	YES	YES	TBD	NO	3–POS, HOA, REMOTE	PLC	
[MS 06]	BOOSTER PUMP NO. 2	VFD	40	52	NA	NO	YES	NO	YES	YES	TBD	NO	3–POS, HOA, REMOTE	PLC	

TABLE NOTES:
* RANGE OF DOOR–MOUNTED AMMETER.
** LOCAL MEANS LOCAL TO MOTOR STARTER (ON STARTER DOOR). REMOTE MEANS REMOTE FROM THE STARTER, LOCAL TO THE MOTOR.

Gray & Osborne, Inc.
CONSULTING ENGINEERS
1130 RAINIER AVENUE SOUTH, SUITE 300
SEATTLE, WASHINGTON 98144

DATE: SEPT 2022
DRAWN: PEB
CHECKED: PAM
APPROVED: MBS

No.	REVISION	DATE	APPD

MICHAEL B. SWEENEY — STATE OF WASHINGTON — 40625 — REGISTERED PROFESSIONAL ENGINEER — 9-26-22

CITY OF LACEY
THURSTON COUNTY WASHINGTON
BEACHCREST WELLFIELD pH IMPROVEMENTS
MOTOR STARTER NOTES

SHEET: E-13
SHEET: 59 of 81
JOB NO.: 19520
DWG:E_MSEWD

L:\LACEY\19520 pH Predesign and S17 Facilities Design\PLANSET\E-Sheets\E_MSEWD.dwg, 9/26/2022 1:26 PM, LIZ BATES

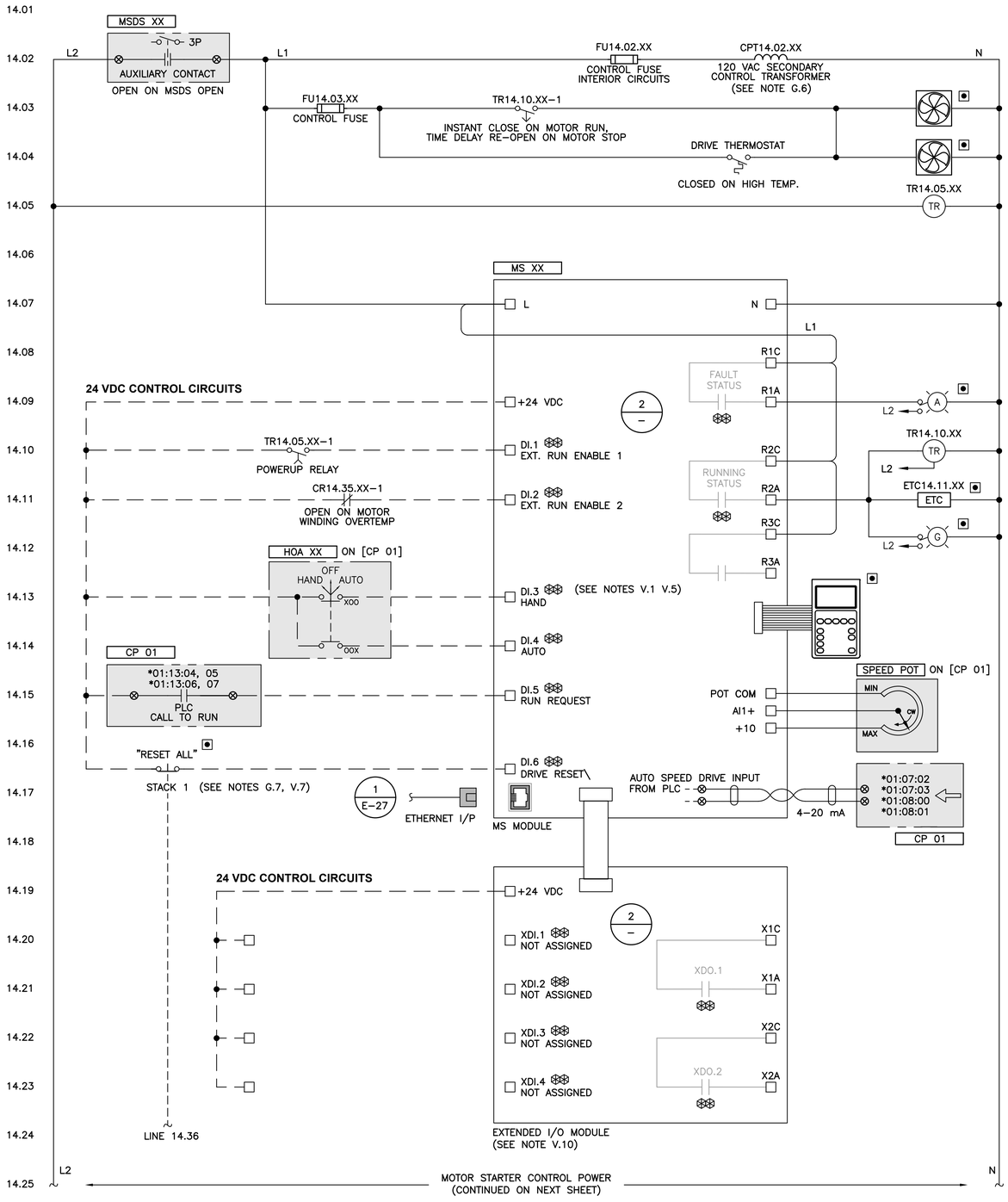

STARTER ENCLOSURE COOLING FANS (TYP.)
(SEE NOTE V.6)

1: 14.10 NA\
2: 14.35 NA\
POWER-UP DELAY TIMER
DELAY STARTER OPERATION FOLLOWING A POWERUP
(SEE TIMER TABLE AND NOTE G.4)

"MOTOR FAULT" STATUS INDICATOR
ACTIVE ON DRIVE FAULT CONDITIONS
(SEE NOTE G.3)

1: 14.03 NA\
2: NA NA\
ENCLOSURE FAN CONTROL TIMER
ENERGIZED ON MOTOR RUNNING
(SEE TIMER TABLE, SEE NOTE V.6)

ELAPSED TIME/COUNTER METER
(SEE NOTE G.5)

"MOTOR RUNNING" STATUS INDICATOR
ACTIVE ON MOTOR RUNNING CONDITIONS
(SEE NOTE G.3)

HUMAN INTERFACE MODULE (HIM)
(SEE NOTE V.4)

FRONT PANEL SPEED POT
(SEE NOTE V.9)

1 MOTOR STARTERS [MS XX] ELEMENTARY WIRING DIAGRAM - PART A
NOT TO SCALE

NOTES:

1. REFERENCE MOTOR STARTER SPECIFICATIONS.
2. REFERENCE MOTOR STARTER NOTES ON (– / E-13) WHERE:
   G.n = GENERAL NOTES,
   V.n = VFD NOTES.
3. ISOLATION AND PASSIVE FILTER CAPACITOR-CONTROL CONTACTORS ARE NOT SHOWN. THESE CIRCUITS MAY VARY BETWEEN MANUFACTURERS. ALL OTHER PHYSICAL RELAYS AND TIMERS SHALL BE PROVIDED AS SHOWN.

= INPUTS AND OUTPUTS TO BE SENSED BY THE PLC OVER THE NETWORK.

SHADED DEVICES ON MOTOR STARTER ELEMENTARY WIRING DIAGRAMS ARE REMOTE FROM THE STARTER.

——— REFERS TO 120 VAC CONTROL WIRING
— — — REFERS TO 24 VDC CONTROL WIRING

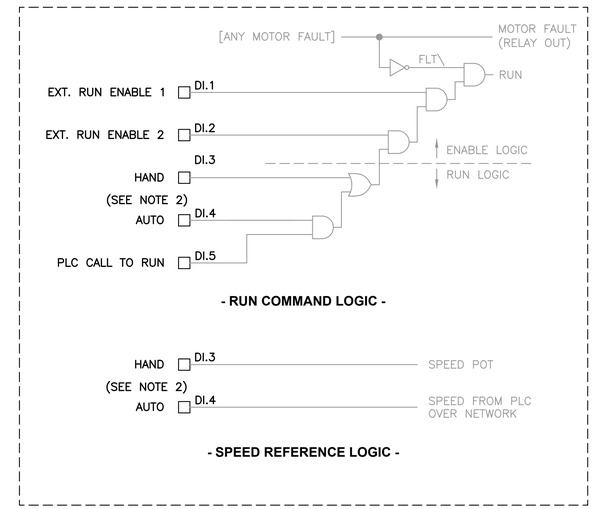

NOTES:

1. CONFIGURE THE STARTER'S RUN COMMAND, SPEED REFERENCE AND "STARTER OK" LOGIC AS SHOWN ABOVE. THIS FUNCTIONALITY MUST BE DEMONSTRATED DURING SHOP WITNESS TESTING.
2. "HAND" AND "AUTO" CONDITIONS ARE MUTUALLY EXCLUSIVE.

2 VFD INTERNAL CONTROL LOGIC DETAIL
NOT TO SCALE

Gray & Osborne, Inc.
CONSULTING ENGINEERS
1130 RAINIER AVENUE SOUTH, SUITE 300
SEATTLE, WASHINGTON 98144

DATE: SEPT 2022	DRAWN: PEB	CHECKED: PAM	APPROVED: MBS

No.	REVISION	DATE	APPD

CITY OF LACEY
THURSTON COUNTY WASHINGTON
BEACHCREST WELLFIELD pH IMPROVEMENTS
MOTOR STARTER ELEMENTARY WIRING DIAGRAM

SHEET: E-14A
SHEET: 60 of 81
JOB NO.: 19520
DWG:E_MSEWD

L:\LACEY\19520 pH Predesign and S17 Facilities Design\PLANSET\E-Sheets\E_MSEWD.dwg, 9/26/2022 1:26 PM, LIZ BATES

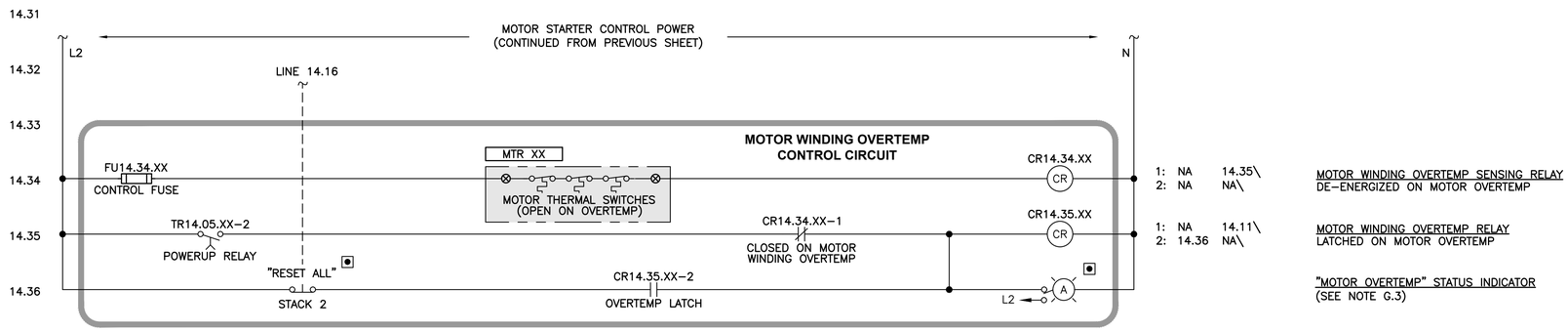

TIMER TABLE					
TIMER	FUNCTION	TYPE	AKA	MINIMUM RANGE	INITIAL SETTING
TR14.05.03	POWER-UP DELAY	TDAE	ON DELAY	0-100 SECONDS	1 SECOND
TR14.05.04	POWER-UP DELAY	TDAE	ON DELAY	0-100 SECONDS	3 SECONDS
TR14.05.05	POWER-UP DELAY	TDAE	ON DELAY	0-100 SECONDS	1 SECOND
TR14.05.06	POWER-UP DELAY	TDAE	ON DELAY	0-100 SECONDS	3 SECONDS
TR14.10.XX	STARTER ENCLOSURE FAN DELAY	TDAD	OFF DELAY	0-100 MINUTES	5 MINUTES

MOTOR STARTER REFERENCE TABLE		
XX	TAG	DESCRIPTION
03	[MS 03]	MOTOR STARTER, AERATION BLOWER NO. 1
04	[MS 04]	MOTOR STARTER, AERATION BLOWER NO. 2
05	[MS 05]	MOTOR STARTER, BOOSTER PUMP NO. 1
06	[MS 06]	MOTOR STARTER, BOOSTER PUMP NO. 2

NOTES:

1. SEE NOTES ON PREVIOUS SHEET.

SHADED DEVICES ON MOTOR STARTER ELEMENTARY WIRING DIAGRAMS ARE REMOTE FROM THE STARTER.

——— REFERS TO 120 VAC CONTROL WIRING
— — — REFERS TO 24 VDC CONTROL WIRING

1 / – MOTOR STARTERS [MS XX] ELEMENTARY WIRING DIAGRAM - PART B

NOT TO SCALE

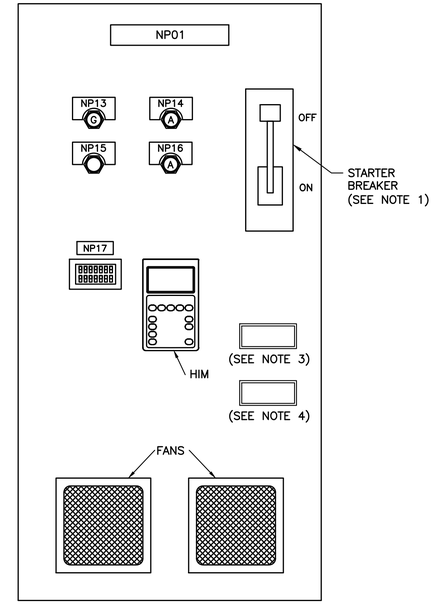

PANEL DOOR NAMEPLATE SCHEDULE	
ITEM NUMBER	ITEM FUNCTION
NP01	SEE LINES 1 AND 2 BELOW
NP13	MOTOR RUNNING (GREEN)
NP14	MOTOR FAULT (AMBER)
NP15	RESET ALL (PUSHBUTTON, RED)
NP16	MOTOR OVERTEMP (AMBER)
NP17	ELAPSED TIME/COUNTER METER

LINE 1	LINE 2
BLOWER NO. 1	[MS 03]
BLOWER NO. 2	[MS 04]
BOOSTER PUMP NO. 1	[MS 05]
BOOSTER PUMP NO. 2	[MS 06]

NOTES:

1. STARTER BREAKERS SHALL BE LOCKABLE IN THE OPEN POSITION AND SHALL BE PROVIDED WITH A DOOR LATCHING MECHANISM THAT ALLOWS THE DOOR TO OPEN UNDER POWER WITH A SPECIAL TOOL. PROVIDE AN AUXILIARY CONTACT ON BREAKERS THAT IS OPEN WHEN THE BREAKER IS OPEN AND CLOSED WHEN THE BREAKER IS CLOSED.
2. THESE DETAILS ARE INTENDED TO SHOW A GENERAL LAYOUT OF DEVICES EXPECTED ON THE STARTER DOORS AND ARE NOT INTENDED TO REPRESENT ACTUAL STARTER OR STARTER DOOR SIZES.
3. PROVIDE AN ARC FLASH WARNING LABEL ON THE DOOR.
4. PROVIDE A SELECTOR SWITCH LOCATION PLACARD ON THE STARTER DOOR PER MOTOR STARTER GENERAL NOTE G.9.

2 / – MOTOR STARTER DOOR DETAIL

NOT TO SCALE

Gray & Osborne, Inc.
CONSULTING ENGINEERS
1130 RAINIER AVENUE SOUTH, SUITE 300
SEATTLE, WASHINGTON 98144

DATE: SEPT 2022 | DRAWN: PEB | CHECKED: PAM | APPROVED: MBS

No.	REVISION	DATE	APPD

MICHAEL B. SWEENEY — STATE OF WASHINGTON — 45252 — REGISTERED PROFESSIONAL ENGINEER — 9-26-22

CITY OF LACEY
THURSTON COUNTY WASHINGTON
BEACHCREST WELLFIELD pH IMPROVEMENTS
MOTOR STARTER ELEMENTARY WIRING DIAGRAM

SHEET: E-14B
SHEET: 61 of 81
JOB NO.: 19520
DWG:E_MSEWD

L:\LACEY\19520 pH Predesign and S17 Facilities Design\PLANSET\E-Sheets\E_MSEWD.dwg, 9/26/2022 1:26 PM, LIZ BATES

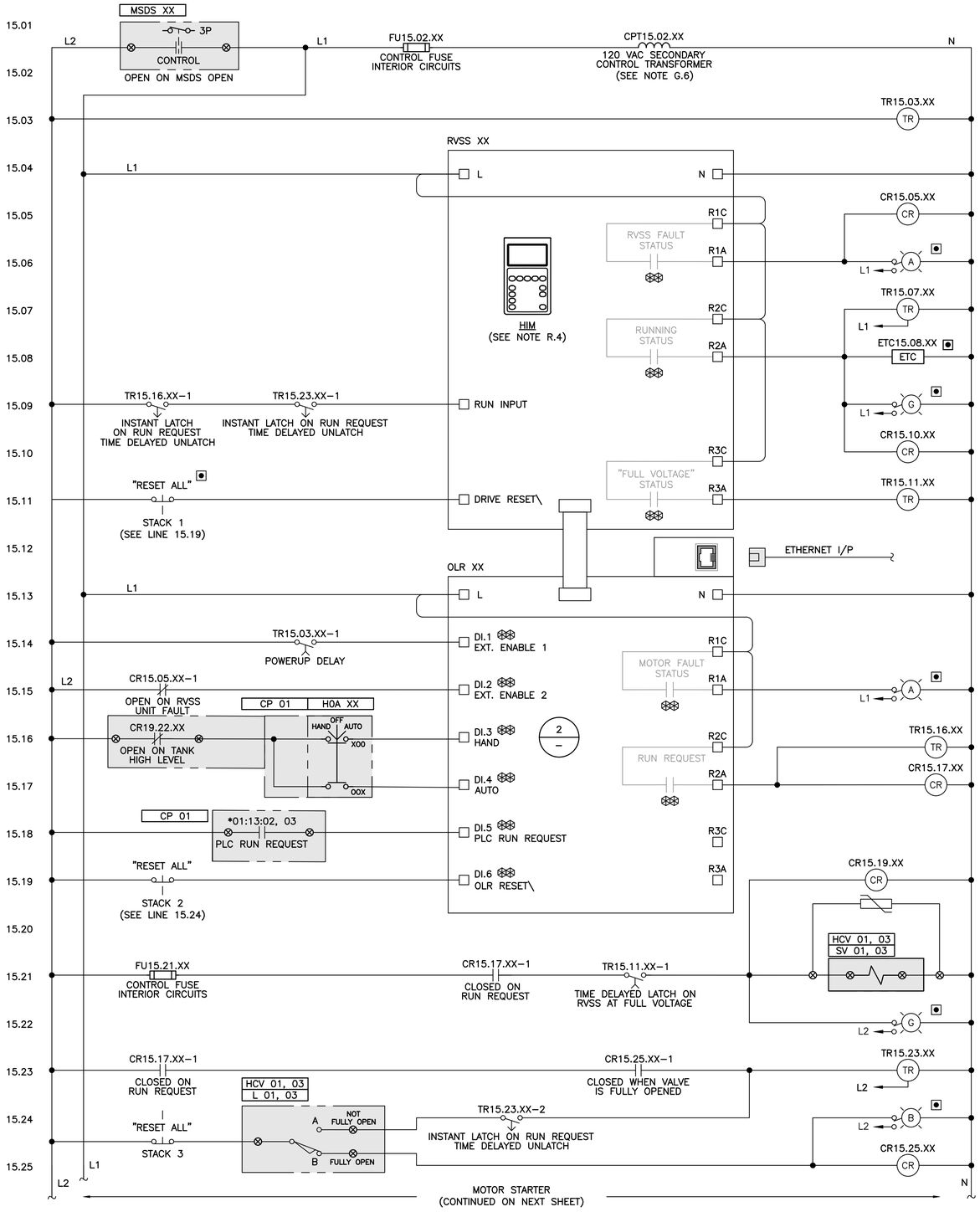

1 – **MOTOR STARTER [MS XX] ELEMENTARY WIRING DIAGRAM - PART A**
RVSS, PLC CONTROLLED

15.03	1: 15.14	NA\	POWERUP DELAY TIMER DELAY STARTER ENABLE FOLLOWING A POWERUP. (SEE TIMER TABLE AND NOTES G.4, G.10)
	2: NA	NA\	
15.05	1: NA	15.15\	RVSS FAULT STATUS RELAY ENERGIZED ON RVSS FAULT, SHUTDOWN THE STARTER
	2: NA	NA\	
15.06			"RVSS FAULT" STATUS INDICATOR ACTIVE ON RVSS FAULT CONDITIONS (SEE NOTE G.3, R.1)
15.07	1: 15.41	NA\	DRIVE FAN CONTROL TIMER ENERGIZED ON MOTOR RUNNING (SEE TIMER TABLE, SEE NOTE R.6)
	2: NA	NA\	
15.08			ELAPSED TIME/COUNTER METER (SEE NOTE G.5)
15.09			"MOTOR RUNNING" STATUS INDICATOR ACTIVE ON MOTOR RUNNING CONDITIONS (SEE NOTE G.3, R.3)
15.10	1: 15.52	NA\	RUNNING STATUS RELAY ENERGIZED ON RVSS RUNNING.
	2: NA	NA\	
15.11	1: 15.21	NA\	FULL VOLTAGE TIMER ENERGIZED ON FULL VOLTAGE. SETS THE DURATION OF DISCHARGE TO WASTE (SEE TIMER TABLE)
	2: NA	NA\	
15.14			"MOTOR FAULT" STATUS INDICATOR ACTIVE ON ANY MOTOR FAULT (SEE NOTE G.3, R.3)
15.16	1: 15.09	NA\	RUN REQUEST DEFEAT RELAY ENERGIZE ON RUN REQUEST (SEE TIMER TABLE)
15.17	1: 15.21	NA\	RUN REQUEST RELAY ENERGIZED ON RUN REQUEST
	2: 15.23	NA\	
15.19	1: 15.36	NA\	CONTROL RELAY ENERGIZED ON [SV 01][SV 03] ENERGIZED
	2: 15.33	NA\	
15.21			DISCHARGE-TO-WASTE CONTROL VALVE ENERGIZED TO CLOSE VALVE (PRODUCTION). DE-ENERGIZED TO OPEN VALVE (DISCHARGE). (SEE NOTE G.2)
15.22			"CLOSE [HCV 01, 03] VALVE COMMAND" STATUS INDICATOR (SEE NOTE G.3)
15.23	1: 15.09	NA\	ANTI-RACE/RUN COMMAND TIMER ENERGIZED ON RUN COMMAND TO RVSS UNIT (SEE TIMER TABLE)
	2: 15.24	NA\	
15.24			"VALVE [HCV 01, 03] FULLY OPEN" STATUS INDICATOR (SEE NOTE G.3)
15.25	1: 15.23	NA\	DISCHARGE TO WASTE VALVE [HCV 01, 03] FULLY OPENED RELAY ENERGIZED VALVE FULLY OPENED. DE-ENERGIZED ON VALVE NOT FULLY OPENED.
	2: 15.50	NA\	

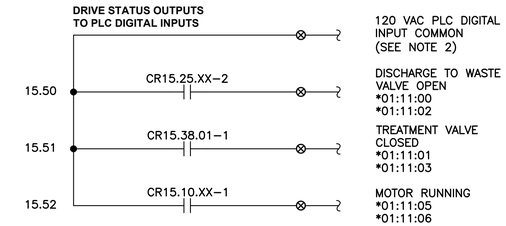

NOTES:

1. REFERENCE MOTOR STARTER NOTES ON E-15B.
2. THE STARTER MANUFACTURER SHALL PROVIDE INDEPENDENT DRY CONTACTS CONNECTED TO A "CONTROL OUTPUT" TERMINAL STRIP FOR THE FUNCTIONS SHOWN ON THIS SHEET.

TIMER SCHEDULE

TIMER	FUNCTION	TYPE	AKA	INITIAL SETTING
TR15.03.01	POWER-UP DELAY	TDAE	ON DELAY	1 SECOND
TR15.03.02	POWER-UP DELAY	TDAE	ON DELAY	3 SECOND
TR15.07.XX	FAN CONTROL TIMER	TDAD	OFF DELAY	15 MINUTES
TR15.11.XX	WASTE DELAY TIMER	TDAE	ON DELAY	5 MINUTES
TR15.16.XX	RUN REQUEST DEFEAT TIMER	TDAD	OFF DELAY	10 MINUTES
TR15.23.XX	ANTI-RACE/RUN COMMAND TIMER	TDAD	OFF DELAY	30 SECOND

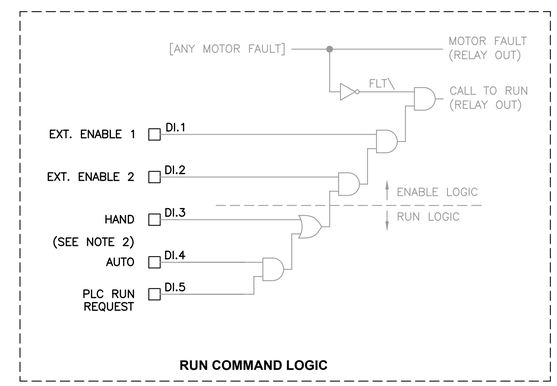

NOTES:

1. THE MANUFACTURER SHALL CONFIGURE THE STARTER RUN COMMAND LOGIC AS SHOWN ABOVE. THE INTEGRATOR SHALL DEMONSTRATE THIS FUNCTIONALITY DURING SHOP WITNESS TESTING.
2. PLC "VALID COMMUNICATION" STATUS IS DERIVED FROM WITHIN THE OVERLOAD RELAY.

2 – **OVERLOAD RELAY INTERNAL LOGIC CONFIGURATION DETAIL**
RUN COMMAND

Gray & Osborne, Inc.
CONSULTING ENGINEERS
1130 RAINIER AVENUE SOUTH, SUITE 300
SEATTLE, WASHINGTON 98144

DATE: SEPT 2022 | DRAWN: PEB | CHECKED: PAM | APPROVED: MBS

No.	REVISION	DATE	APPD

MICHAEL B. SWEENEY — STATE OF WASHINGTON — 40625 — REGISTERED PROFESSIONAL ENGINEER — 9-26-22

CITY OF LACEY
THURSTON COUNTY WASHINGTON
BEACHCREST WELLFIELD pH IMPROVEMENTS
MOTOR STARTER ELEMENTARY WIRING DIAGRAM

SHEET: **E-15A**
SHEET: **62 of 81**
JOB NO.: 19520
DWG:E_MSEWD

L:\LACEY\19520 pH Predesign and S17 Facilities Design\PLANSET\E-Sheets\E_MSEWD.dwg, 9/26/2022 1:26 PM, LIZ BATES

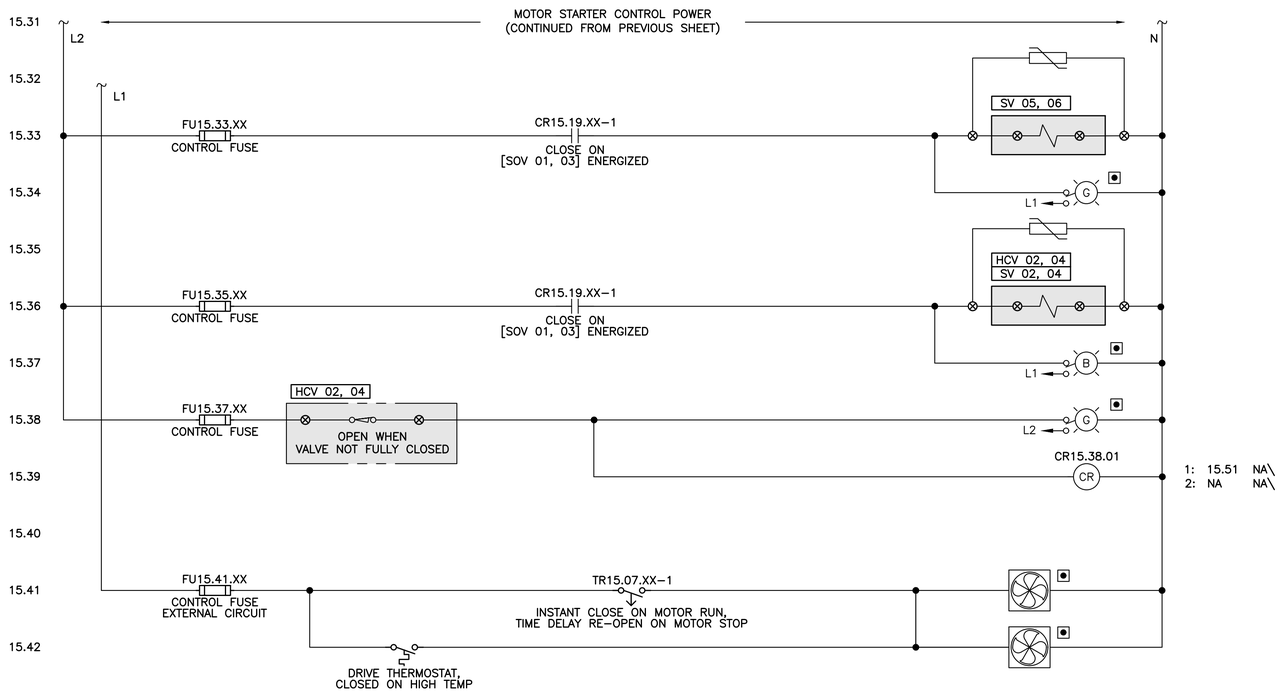

pH SOLENOID VALVES
ENERGIZED TO CLOSE VALVE.
DE-ENERGIZED TO OPEN VALVE .(SEE NOTE G.2)

"CLOSE [SV 05, 06] VALVE COMMAND"
STATUS INDICATOR
(SEE NOTE G.3)

TREATMENT SOLENOID VALVE
ENERGIZED TO OPEN VALVE. DE-ENERGIZED TO CLOSE VALVE.
(SEE NOTE G.2)

"OPEN VALVE [HCV 02, 04] COMMAND"
STATUS INDICATOR
(SEE NOTE G.3)

"VALVE [HCV 02, 04] CLOSED" STATUS INDICATOR
(SEE NOTE G.3)

1: 15.51 NA\
2: NA NA\

VALVE [HCV 02, 04] FULLY CLOSED RELAY
ENERGIZED WHEN VALVE NOT FULLY CLOSED

STARTER DRIVE COOLING FANS (TYP.)
(SEE NOTE R.6)

NOTES:

1. REFERENCE MOTOR STARTER SPECIFICATIONS.
2. REFERENCE MOTOR STARTER NOTES ON (– / E-13) WHERE:

   G.n = GENERAL NOTES,
   R.n = RVSS NOTES,
   OL.n = OVERLOAD RELAY NOTES.
3. ISOLATION AND BYPASS CONTACTORS ARE NOT SHOWN. THESE CIRCUITS MAY VARY BETWEEN MANUFACTURERS. PROVIDE AS REQUIRED. ALL OTHER PHYSICAL RELAYS AND TIMERS SHALL BE PROVIDED AS SHOWN.
4. POWER FACTOR CORRECTION CONTACTORS ARE NOT SHOWN. PROVIDE AS REQUIRED IF CALLED OUT IN THE SPECIFICATIONS OR IF SHOWN ON THE ONE LINE DIAGRAM.
5. CONFIGURE THE STARTER'S RUN COMMAND AND "STARTER OK" LOGIC AS SHOWN. THIS FUNCTIONALITY MUST BE DEMONSTRATED DURING SHOP WITNESS TESTING. (2 / E-15A)
6. "HAND" AND "AUTO" CONDITIONS ARE MUTUALLY EXCLUSIVE.
7. PLC "VALID COMMUNICATION" STATUS IS DERIVED FROM WITHIN THE OVERLOAD RELAY.
8. PROVIDE A MINIMUM OF TEN SPARE TERMINALS.

= INPUTS AND OUTPUTS TO BE SENSED BY THE PLC OVER THE NETWORK.

SHADED DEVICES ON MOTOR STARTER ELEMENTARY WIRING DIAGRAMS ARE REMOTE FROM THE STARTER.

——— REFERES TO 120 VAC CONTROL WIRING
— — — REFERES TO 24 VDC CONTROL WIRING

(1 / –) MOTOR STARTERS [MS XX] ELEMENTARY WIRING DIAGRAM - PART B

NOT TO SCALE

MOTOR STARTER REFERENCE TABLE		
XX	TAG	DESCRIPTION
01	[MS 01]	MOTOR STARTER, WELL PUMP S15R
02	[MS 02]	MOTOR STARTER, WELL PUMP S16

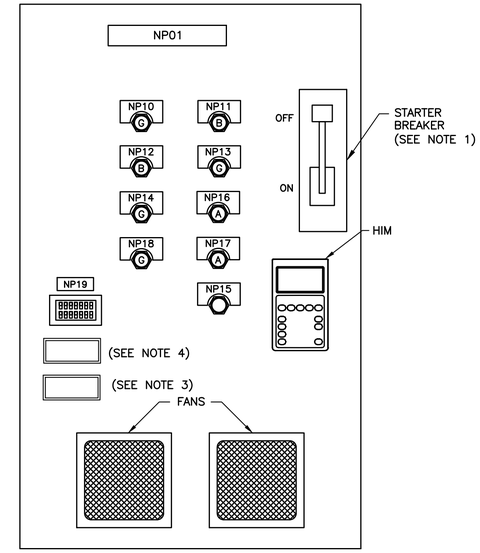

PANEL DOOR NAMEPLATE SCHEDULE	
ITEM NUMBER	ITEM FUNCTION
NP01	SEE LINES 1 AND 2 BELOW
NP10	CLOSE VALVE [HCV 01, 03] COMMAND (PILOT, GREEN)
NP11	VALVE [HCV 01, 03] FULLY OPENED (PILOT, BLUE)
NP12	OPEN VALVE [HCV 02, 04] COMMAND (PILOT, BLUE)
NP13	VALVE [HCV 02, 04] CLOSED (PILOT, GREEN)
NP14	MOTOR RUNNING (PILOT, GREEN)
NP15	DRIVE RESET (PUSHBUTTON, BLACK)
NP16	RVSS FAULT (PILOT, AMBER)
NP17	MOTOR FAULT (PILOT, AMBER)
NP18	CLOSE VALVE [SV 05, 06] COMMAND (PILOT, GREEN)
NP19	ELAPSED TIME/COUNTER METER

LINE 1	LINE 2
WELL PUMP S15R	[MS 01]
WELL PUMP S16	[MS 02]

NOTES:

1. STARTER BREAKERS SHALL BE LOCKABLE IN THE OPEN POSITION AND SHALL BE PROVIDED WITH A DOOR LATCHING MECHANISM THAT ALLOWS THE DOOR TO OPEN UNDER POWER WITH A SPECIAL TOOL. PROVIDE AN AUXILIARY CONTACT ON BREAKERS THAT IS OPEN WHEN THE BREAKER IS OPEN AND CLOSED WHEN THE BREAKER IS CLOSED.
2. THESE DETAILS ARE INTENDED TO SHOW A GENERAL LAYOUT OF DEVICES EXPECTED ON THE STARTER DOORS AND ARE NOT INTENDED TO REPRESENT ACTUAL STARTER OR STARTER DOOR SIZES.
3. PROVIDE AN ARC FLASH WARNING LABEL ON THE DOOR.
4. PROVIDE A SELECTOR SWITCH LOCATION PLACARD ON THE STARTER DOOR PER MOTOR STARTER GENERAL NOTE G.9.

(2 / –) MOTOR STARTER DOOR DETAIL

NOT TO SCALE

Gray & Osborne, Inc.
CONSULTING ENGINEERS
1130 RAINIER AVENUE SOUTH, SUITE 300
SEATTLE, WASHINGTON 98144

DATE: SEPT 2022 | DRAWN: PEB | CHECKED: PAM | APPROVED: MBS

No.	REVISION	DATE	APPD

MICHAEL B. SWEENEY — STATE OF WASHINGTON — 23089 — REGISTERED PROFESSIONAL ENGINEER — 9-26-22

CITY OF LACEY
THURSTON COUNTY WASHINGTON
BEACHCREST WELLFIELD pH IMPROVEMENTS
MOTOR STARTER ELEMENTARY WIRING DIAGRAM

SHEET: E-15B
SHEET: 63 of 81
JOB NO.: 19520
DWG:E_MSEWD

L:\LACEY\19520 pH Predesign and S17 Facilities Design\PLANSET\E-Sheets\E_MSEWD.dwg, 9/26/2022 1:27 PM, LIZ BATES

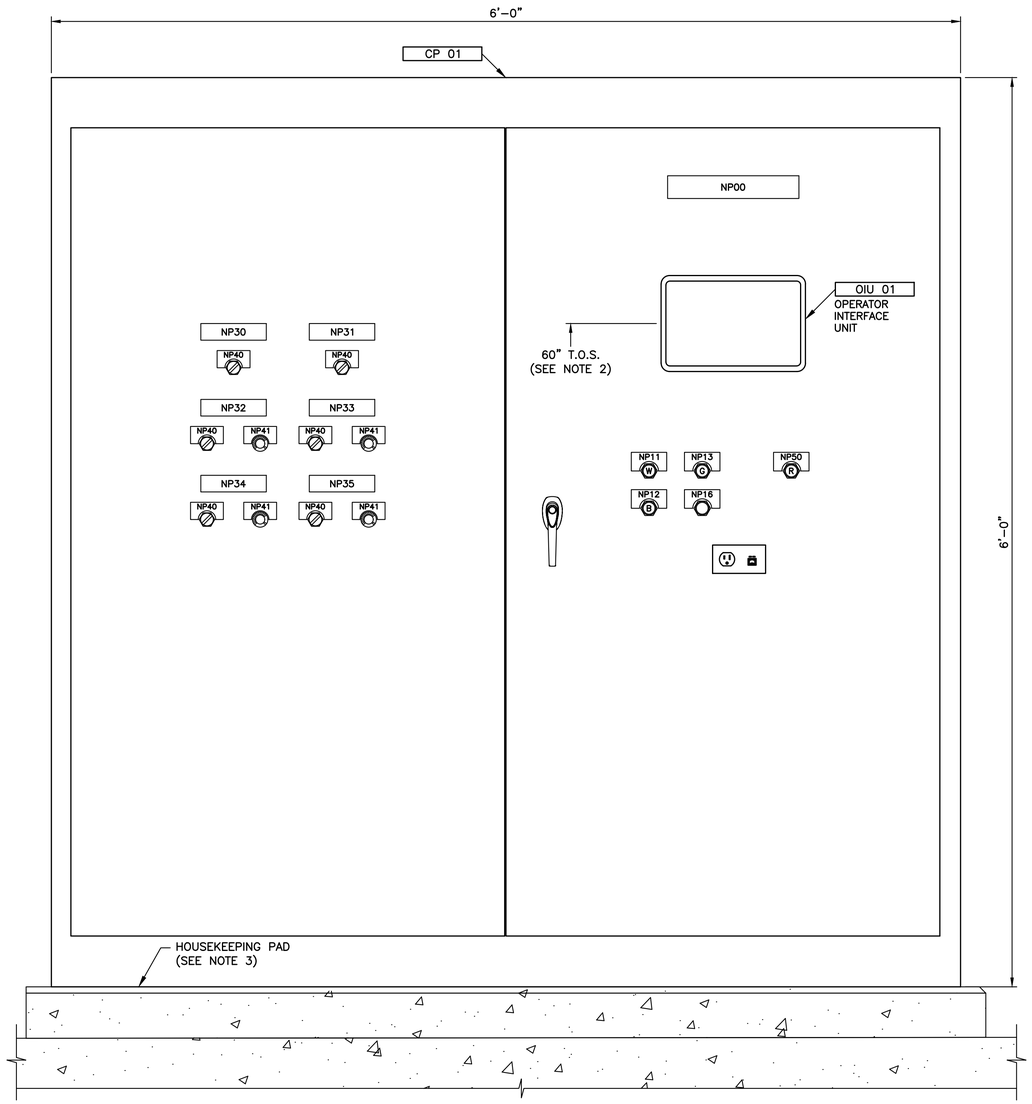

1 — **CONTROL PANEL [CP 01] EXTERIOR ELEVATION**
NOT TO SCALE

PANEL DOOR NAMEPLATE SCHEDULE		
ITEM NUMBER	TAG/DEVICE NUMBER	ITEM FUNCTION
NP00	[CP 01]	CITY OF LACEY BEACHCREST WELL FIELD CONTROL PANEL [CP 01]
NP11		PRIMARY 120 VAC VALID (PILOT, WHITE)
NP12		UPS 120 VAC ON UPS POWER (PILOT, BLUE)
NP13		24 VDC BUS VALID (PILOT, GREEN)
NP16		RESET SMOKE DETECTORS (PUSHBUTTON, BLACK)
NP30	[WP S15R]	WELL PUMP S15R
NP31	[WP S16]	WELL PUMP S16
NP32	[B 01]	AERATION BLOWER NO. 1
NP33	[B 02]	AERATION BLOWER NO. 2
NP34	[BP 01]	BOOSTER PUMP NO. 1
NP35	[BP 02]	BOOSTER PUMP NO. 2
NP40		HAND OFF AUTO
NP41		MANUAL SPEED POT
NP50		FAIL RESET (PUSHBUTTON, WITH RED PILOT)

SHEET NOTES:

1. PLC CONTROL PANEL [CP 01] SHALL BE 72"H X 72"W X 20"D (MIN), 12-GAUGE STEEL, NEMA 1 GASKETED, OPEN BOTTOM, WITH LEFT HAND (HINGE ON LEFT SIDE) PAD-LOCKABLE 3-POINT LATCH DOOR. PROVIDE A DOOR-CATCH ON THE HINGED SIDE TO HOLD THE DOOR IN THE OPEN POSITION.
2. DEVICE LOCATIONS ON THIS SHEET SHOW A LAYOUT INTENT AND MAY BE PLACED OTHERWISE AS REQUIRED FOR BEST FIT AND ACCESS BY THE OPERATORS. MAINTAIN 60 INCH HEIGHT FROM FLOOR TO CENTERLINE OF THE OIU. ASSUME 3.5-INCH HOUSEKEEPING PAD. PROVIDE SIDE PANEL FOR SECOND BATTERY IF REQUIRED.
3. THE CONTROL PANEL SHALL BE SECURED TO THE WALL WITH 5/8-INCH CHANNEL 48 INCHES ABOVE THE FLOOR. REFERENCE STRUCTURAL SHEETS FOR HOUSEKEEPING PAD.

Gray & Osborne, Inc.
CONSULTING ENGINEERS
1130 RAINIER AVENUE SOUTH, SUITE 300
SEATTLE, WASHINGTON 98144

DATE: SEPT 2022
DRAWN: PEB
CHECKED: PAM
APPROVED: MBS

No.	REVISION	DATE	APPD

MICHAEL B. STEENEY — STATE OF WASHINGTON — 45229 — REGISTERED PROFESSIONAL ENGINEER — 9-26-22

CITY OF LACEY
THURSTON COUNTY WASHINGTON
BEACHCREST WELLFIELD pH IMPROVEMENTS
[CP 01] CONTROL PANEL EXTERIOR ELEVATION

SHEET: E-16
SHEET: 64 of 81
JOB NO.: 19520
DWG:E_CPEL

L:\LACEY\19520 pH Predesign and S17 Facilities Design\PLANSET\E-Sheets\E_CPEL.dwg, 9/26/2022 1:27 PM, LIZ BATES

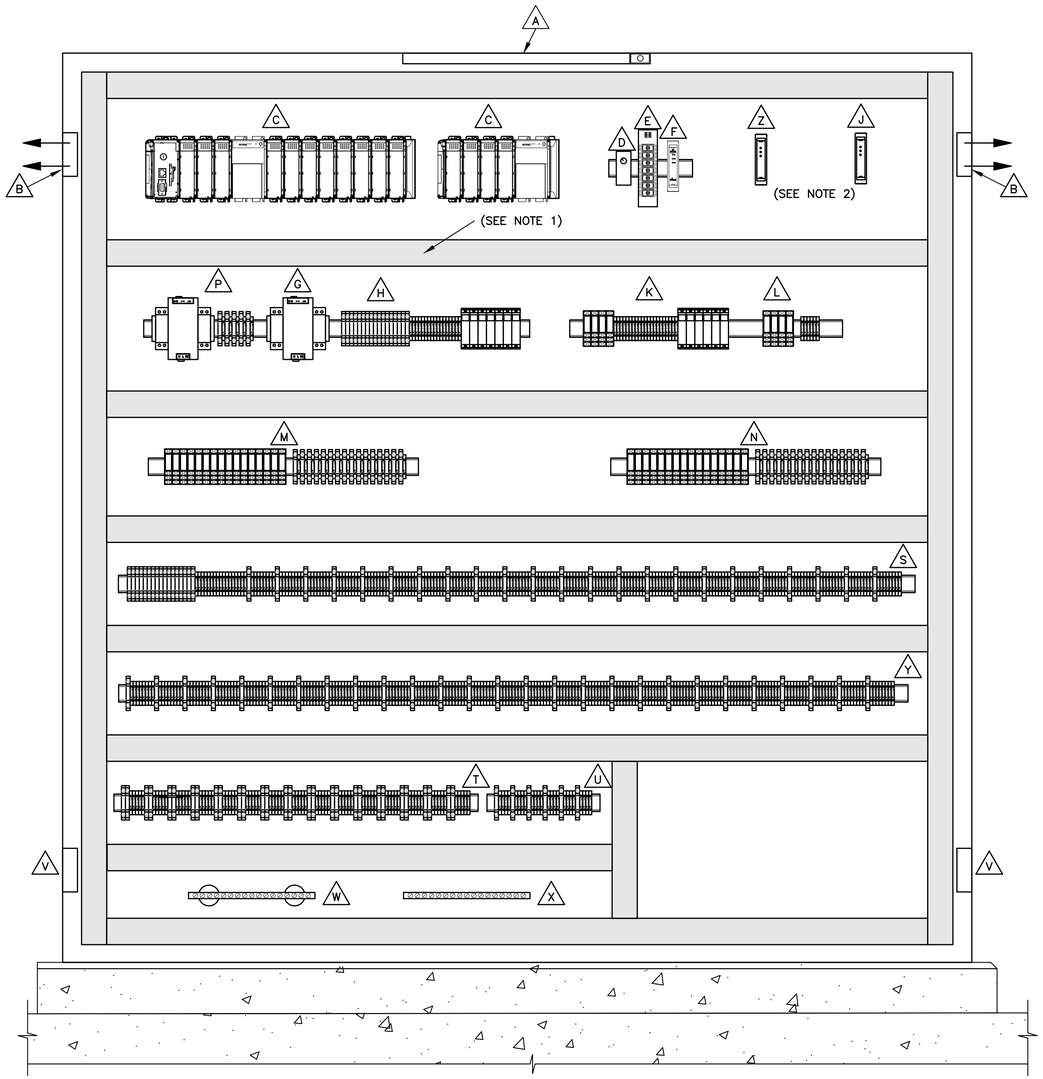

1 – **CONTROL PANEL [CP 01] INTERIOR ELEVATION**
NOT TO SCALE

CONTROL PANEL [CP 01] DEVICE SCHEDULE	
ITEM NUMBER	ITEM FUNCTION
A	ENCLOSURE LIGHT WITH DOOR SWITCH
B	ENCLOSURE EXHAUST FAN
C	PROGRAMMABLE LOGIC CONTROLLER [PLC 01]
D	EXHAUST FAN THERMOSTAT
E	ETHERNET SWITCH [ES 01]
F	ETHERNET TO SERIAL CONVERTER ROUTER
G	24 VDC POWER SUPPLY
H	24 VDC CIRCUITS AND DISTRIBUTION
J	CELLULAR MODEM
K	ANCILLARY POWER CIRCUIT BREAKERS, RELAYS, LOUVER AND EXHAUST FAN CONTACTOR, AND TERMINALS.
L	POWER MONITORING RELAYS AND TERMINALS
M	24 VDC DIGITAL OUTPUT BUFFER RELAYS, FUSING AND TERMINALS
N	120 VAC DIGITAL OUTPUT BUFFER RELAYS, FUSING AND TERMINALS
P	12 VDC POWER SUPPLY, FUSING AND TERMINALS
S	DIGITAL INPUT FUSING AND TERMINALS
T	ANALOG INPUT FUSING AND TERMINALS
U	ANALOG OUTPUT FUSING AND TERMINALS
V	INLET VENT
W	ISOLATED SIGNAL GROUND BUS
X	GROUND/CHASSIS BUS
Y	120 VAC CIRCUITS AND DISTRIBUTION
Z	RADIO

NOTES:

1. SHADED AREAS REPRESENT WIREWAYS. PROVIDE SIDE PANEL IF MORE AREA IS REQUIRED TO MOUNT COMPONENTS.
2. MOUNT RADIO AND CELLULAR MODEMS ON 90 DEGREE BRACKETS SO THAT THEIR INDICATION LIGHTS ARE FACING OUT.
3. DEVICE LOCATIONS ON THIS SHEET SHOW A LAYOUT INTENT AND MAY BE PLACED OTHERWISE AS REQUIRED FOR BEST FIT AND ACCESS BY THE OPERATORS. PROVIDE SIDE PANEL FOR SECOND BATTERY IF REQUIRED.

Gray & Osborne, Inc.
CONSULTING ENGINEERS
1130 RAINIER AVENUE SOUTH, SUITE 300
SEATTLE, WASHINGTON 98144

DATE: SEPT 2022
DRAWN: PEB
CHECKED: PAM
APPROVED: MBS

No.	REVISION	DATE	APPD

MICHAEL B. SWEENEY
STATE OF WASHINGTON
45309
REGISTERED PROFESSIONAL ENGINEER
9-26-22

CITY OF LACEY
THURSTON COUNTY WASHINGTON
BEACHCREST WELLFIELD pH IMPROVEMENTS
[CP 01] CONTROL PANEL INTERIOR ELEVATION

SHEET: E-17
SHEET: 65 of 81
JOB NO.: 19520
DWG:E_CPEL

L:\LACEY\19520 pH Predesign and S17 Facilities Design\PLANSET\E-Sheets\E_CPEL.dwg, 9/26/2022 1:27 PM, LIZ BATES

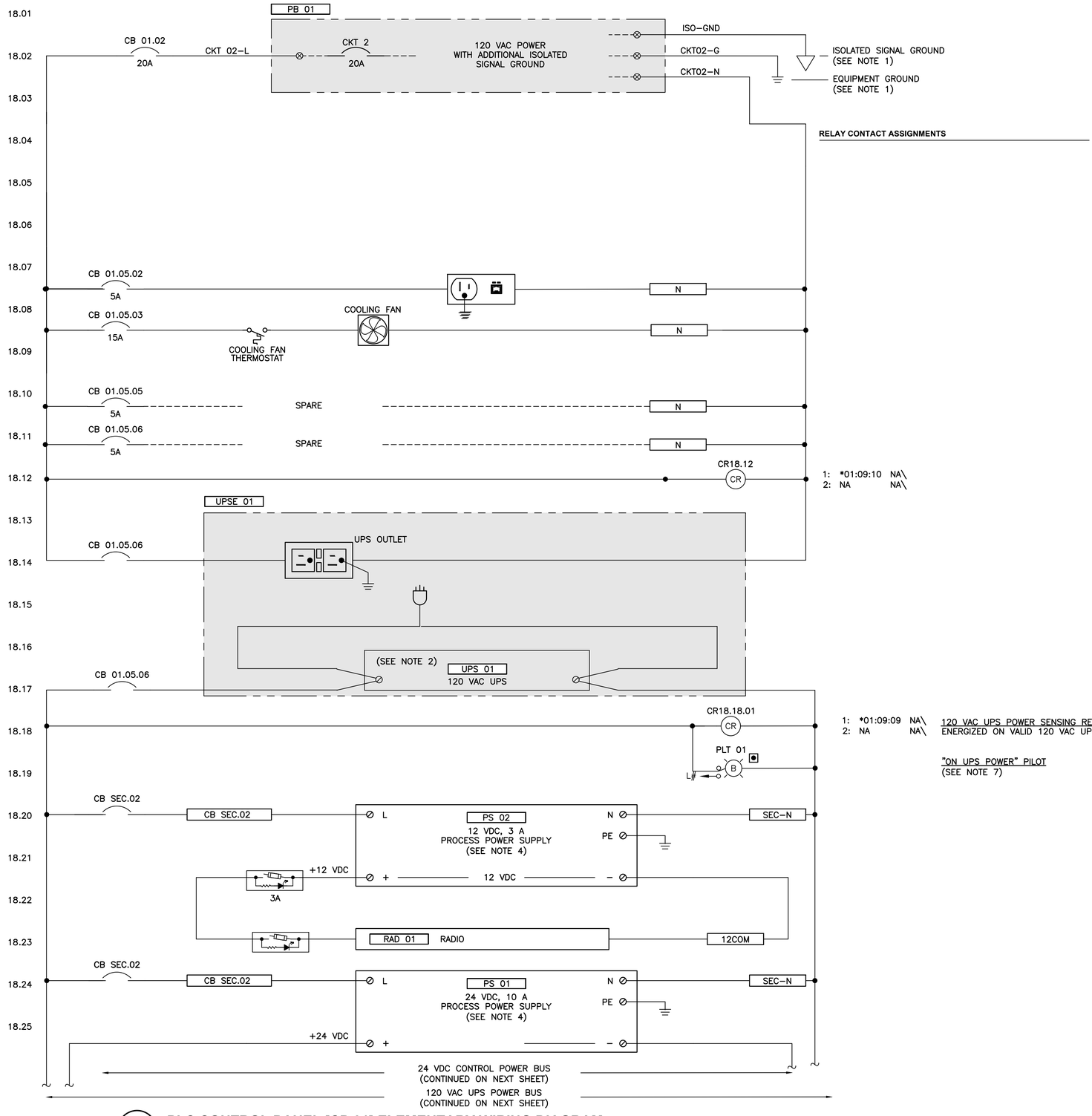

1 — **PLC CONTROL PANEL [CP 01] ELEMENTARY WIRING DIAGRAM**

NOT TO SCALE

NOTES:

1. PROVIDE A DEDICATED GROUND STRIP FOR ANALOG INPUT AND OUTPUT SHIELDS. THIS GROUND IS DERIVED FROM THE GROUND BUS OF PANELBOARD [PB 01] AND IS RUN SEPARATELY TO [CP 01] THROUGH A #10 AWG STRANDED COPPER CONDUCTOR WITH GREEN INSULATION. SIGNAL GROUNDS IN [CP 01] ARE ISOLATED FROM CHASSIS\EQUIPMENT GROUND BUT ARE AT THE SAME POTENTIAL.

2. THE INTEGRATOR SHALL CALCULATE AND SIZE A 120VAC UPS FOR 3 HOURS (MINIMUM) WITH ALL CONNECTED LOADS ACTIVE. THESE CALCULATIONS SHALL BE PRESENTED TO ENGINEERING DURING SUBMITTAL.

3. ALL POWER SUPPLIES, AND CONVERTERS, SHALL BE INDUSTRIAL, PACKAGED, MANUFACTURER, UL–LISTED, DIN–RAIL DEVICES. CUSTOM–BUILT CIRCUIT BOARDS AND LOOSE ELECTRONIC DEVICES SHALL NOT BE ALLOWED.

4. THIS 24/12 VDC POWER SYSTEMS ARE DESIGNED AROUND THE FOLLOWING DEVICES:
   a. [PS 01], 120 VAC/24 VDC, 10A, POWER SUPPLY — PULS #QS10.241
   b. [PS 02], 120 VAC/12 VDC, 3A, POWER SUPPLY — PULS #ML30.102

   THESE UNITS MAY BE REPLACED WITH "OR EQUAL" DEVICES.

6. ALL 120 VAC RELAYS SHALL BE PROTECTED WITH MOVs. ALL 24 VDC RELAYS SHALL BE PROTECTED WITH REVERSE–BIASED SURGE PROTECTION DIODES.

7. ALL PILOT LIGHTS IN [CP 01] SHALL BE LED PUSH–TO–TEST TYPE.

8. FUSED DIGITAL I/O DISTRIBUTION SHOWN HERE REPRESENTS THE REQUIREMENT FOR GENERAL DIGITAL I/O POWER DISTRIBUTION. FUSE DIGITAL I/O PER SPECIFICATION 16940.

9. FUSED ANALOG I/O DISTRIBUTION SHOWN HERE REPRESENTS THE REQUIREMENT FOR GENERAL ANALOG I/O POWER DISTRIBUTION. FUSE ANALOG I/O PER SPECIFICATION 16940.

10. FUSED 24 VDC SPARE CONTROL POWER DISTRIBUTION SHOWN HERE REPRESENTS A GENERAL REQUIREMENT. PROVIDE 4 SPARE FUSED TERMINAL BLOCKS WITH AN ASSOCIATED 24VCOM TERMINAL MOUNTED ADJACENT TO EACH FUSE.

Gray & Osborne, Inc.
CONSULTING ENGINEERS
1130 RAINIER AVENUE SOUTH, SUITE 300
SEATTLE, WASHINGTON 98144

DATE: SEPT 2022	
DRAWN:	PEB
CHECKED:	PAM
APPROVED:	MBS

No.	REVISION	DATE	APPD

MICHAEL B. SWEENEY — STATE OF WASHINGTON — 36205 — REGISTERED PROFESSIONAL ENGINEER — 9-26-22

CITY OF LACEY
THURSTON COUNTY WASHINGTON
BEACHCREST WELLFIELD pH IMPROVEMENTS
CONTROL PANEL ELEMENTARY WIRING DIAGRAM

SHEET: **E-18**
SHEET: **66 of 81**
JOB NO.: 19520
DWG:E_CPEWD

L:\LACEY\19520 pH Predesign and S17 Facilities Design\PLANSET\E-Sheets\E_CPEWD.dwg, 9/26/2022 1:28 PM, LIZ BATES

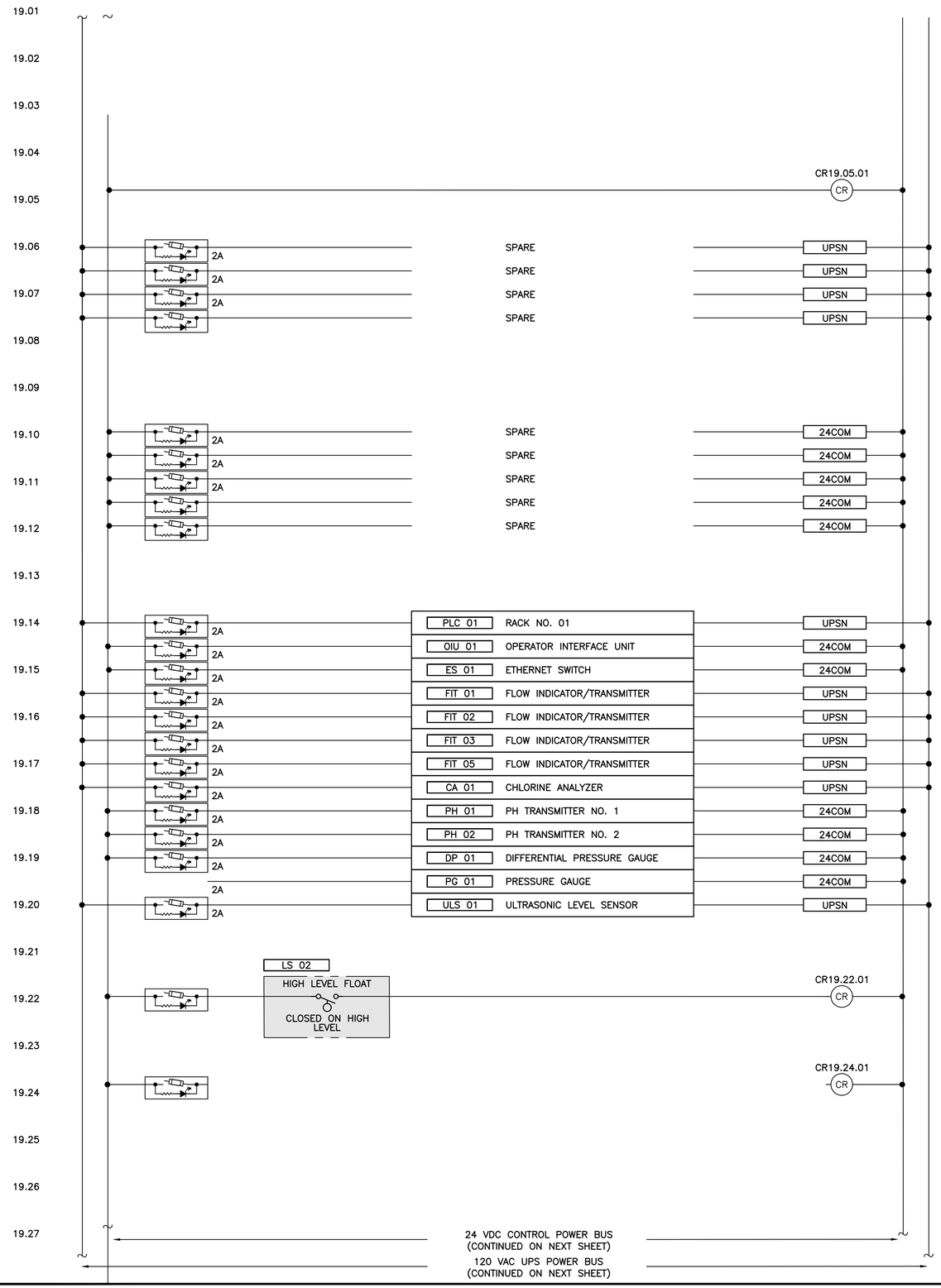

RELAY CONTACT ASSIGNMENTS

1: *01:09:08 NA\
2: NA NA\

24 VDC POWER SENSING RELAY
ENERGIZED ON VALID 24 VDC POWER

1: 15.16.01 NA\
2: 15.16.02 NA\
3: *.01:10.14 NA\

HIGH LEVEL SENSING RELAY
ENERGIZED ON HIGH LEVEL IN PACKAGE AERATION UNIT

1: NA NA\
2: NA NA\

SPARE RELAY

NOTES:

1. SEE NOTES ON E-18. ALL REFERENCES ARE FOR NOTES ON SHEET E-18.

1 — **PLC CONTROL PANEL [CP 01] ELEMENTARY WIRING DIAGRAM**
NOT TO SCALE

Gray & Osborne, Inc.
CONSULTING ENGINEERS
1130 RAINIER AVENUE SOUTH, SUITE 300
SEATTLE, WASHINGTON 98144

DATE: SEPT 2022
DRAWN: PEB
CHECKED: PAM
APPROVED: MBS

No.	REVISION	DATE	APPD

MICHAEL B. SWEENEY — STATE OF WASHINGTON — 45235 — REGISTERED PROFESSIONAL ENGINEER — 9-26-22

CITY OF LACEY
THURSTON COUNTY WASHINGTON
BEACHCREST WELLFIELD pH IMPROVEMENTS
CONTROL PANEL ELEMENTARY WIRING DIAGRAM

SHEET: **E-19**
SHEET: **67 of 81**
JOB NO.: 19520
DWG:E_CPEWD

L:\LACEY\19520 pH Predesign and S17 Facilities Design\PLANSET\E-Sheets\E_CPEWD.dwg, 9/26/2022 1:28 PM, LIZ BATES

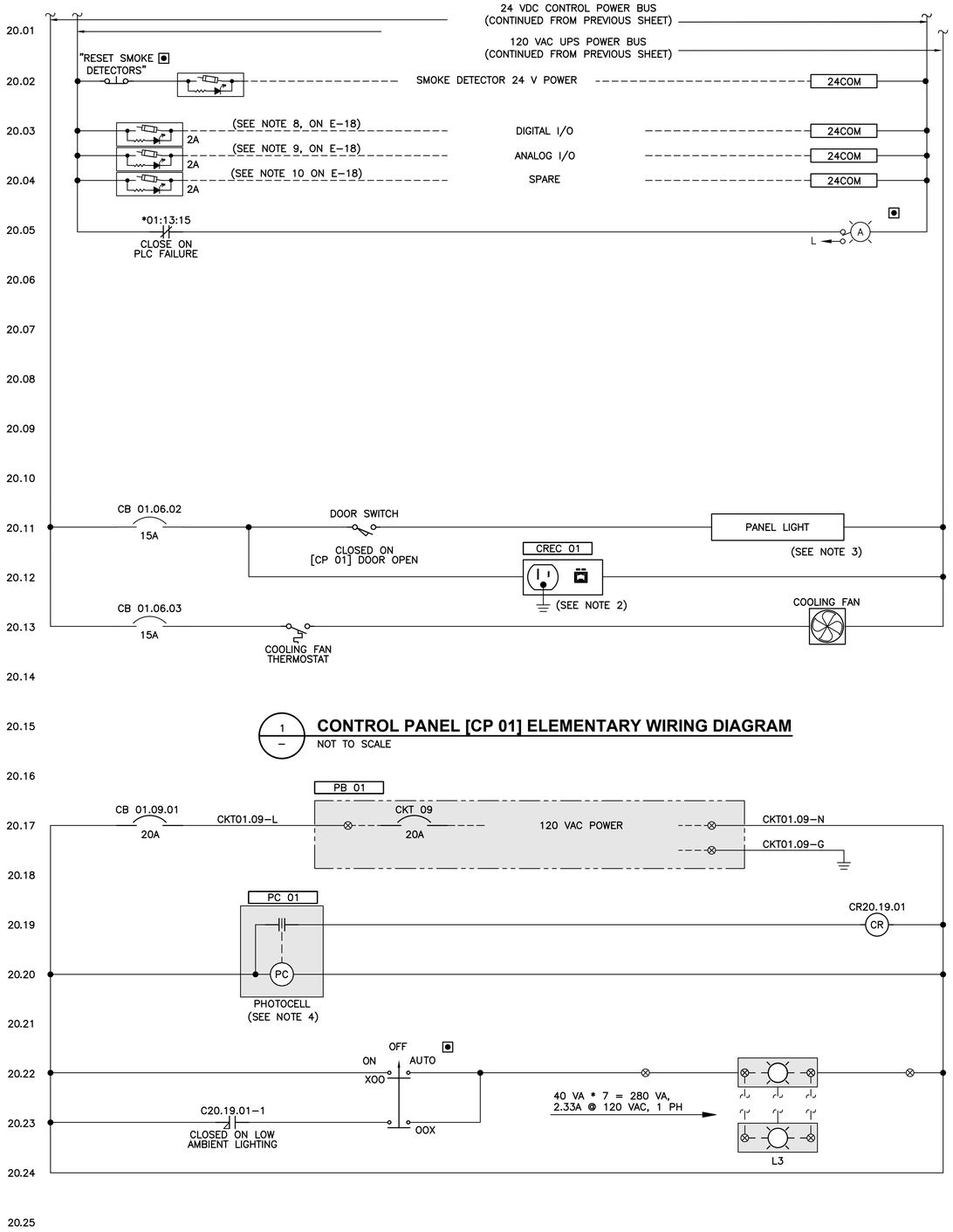

1 – **CONTROL PANEL [CP 01] ELEMENTARY WIRING DIAGRAM**
NOT TO SCALE

"PLC FAIL" PILOT
(SEE NOTE 7, E-18)

SHADED DEVICES ON THIS SHEET
ARE REMOTE FROM [CP 01] AND [CP 02].

DOOR-ACTIVATED PANEL LIGHT FOR [CP 01]

NON-GFCI CONVENIENCE RECEPTACLE
AND ETHERNET PORT (SEE NOTE 2)

COOLING FAN FOR [CP 01]

NOTES FOR ANCILLARY AND EXTERIOR LIGHTING CONTROL:

1. SURGE PROTECTIVE DEVICE IS 120 VAC, 40 kA; 1" WIDE, DIN-RAIL; COOPER BUSSMAN BSPM1120S2G OR EQUIVALENT.
2. [CREC 01] SHALL INCLUDE 1x RJ45 ETHERNET PORT PLUS 1x SIMPLEX RECEPTACLE IN A UL TYPE 4 THRU-VIEW WINDOW (GRACEPORT #P-R2-F3R0 OR EQUAL) AND SHALL BE MOUNTED ON THE RIGHT SIDE OF [CP 01], 36" ABOVE THE FLOOR
3. PROVIDE PANEL LIGHT AS 120 VAC, LED TYPE.
4. [PC 01] IS A TORK MODEL NO. 2101. CONTACT IS CLOSED AT 2 FOOTCANDLES OF AMBIENT LIGHT OR LESS AND OPEN AT 5 FOOTCANDLES OF AMBIENT LIGHT OR MORE.

RELAY CONTACT ASSIGNMENTS

1: 20.23 NA\ OUTDOOR LIGHTING RELAY
2: NA NA\ ENERGIZED ON LOW AMBIENT LIGHT

PHOTOCELL CONTROLLER

OUTDOOR BUILDING LIGHTS

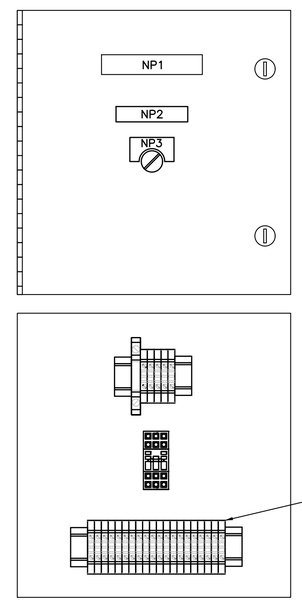

CONTROL PANEL DOOR SCHEDULE	
NAME PLATE	NAME PLATE ENGRAVING
NP1	EXTERIOR LIGHTING CONTROL PANEL [CP 02]
NP2	ON OFF AUTO
NP3	BUILDING LIGHTING

NOTES:

1. CONTROL PANEL [CP 02] SHALL BE 12" W X 18" H 8" D MAXIMUM NEMA 1 WITH CONTINUOUS HINGE.
2. THIS ELEVATION IS INTENDED TO SHOW A GENERAL INTERIOR LAYOUT.
3. [CP 02] SHALL BE UL508 LABELED.

2 – **EXTERIOR LIGHTING CONTROL PANEL [CP 02] ELEVATIONS AND CONNECTION DIAGRAM**
NOT TO SCALE

Gray & Osborne, Inc.
CONSULTING ENGINEERS
1130 RAINIER AVENUE SOUTH, SUITE 300
SEATTLE, WASHINGTON 98144

DATE: SEPT 2022
DRAWN: PEB
CHECKED: PAM
APPROVED: MBS

No.	REVISION	DATE	APPD

MICHAEL B. SWEENEY
STATE OF WASHINGTON
23089
REGISTERED PROFESSIONAL ENGINEER
9-26-22

CITY OF LACEY
THURSTON COUNTY WASHINGTON
BEACHCREST WELLFIELD pH IMPROVEMENTS
CONTROL PANEL ELEMENTARY WIRING DIAGRAM

SHEET: E-20
SHEET: 68 of 81
JOB NO.: 19520
DWG:E_CPEWD

L:\LACEY\19520 pH Predesign and S17 Facilities Design\PLANSET\E-Sheets\E_CPEWD.dwg, 9/26/2022 1:28 PM, LIZ BATES

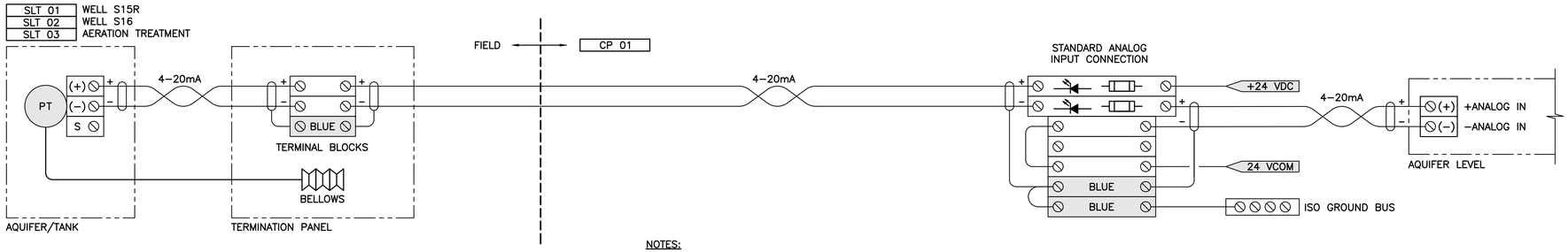

PLC	RACK	SLOT	CHAN.	DEVICE	CONFIG
PLC 01	01	01	00	SLT 01	4–20 mA
PLC 01	01	01	01	SLT 02	4–20 mA
PLC 01	01	01	02	SLT 03	4–20 mA

NOTES:

1. LEVEL TRANSMITTERS ARE LOOP–POWERED, SUBMERSIBLE TYPE. CONNECT TRANSMITTER CABLE TO BELDEN CABLE IN MANUFACTURER'S CABLE TERMINATION PANEL. COIL 2 FEET OF EXTRA CABLE IN CONTROL PANEL.

1 – LEVEL TRANSMITTER INSTRUMENTATION CONNECTION DIAGRAM

NOT TO SCALE

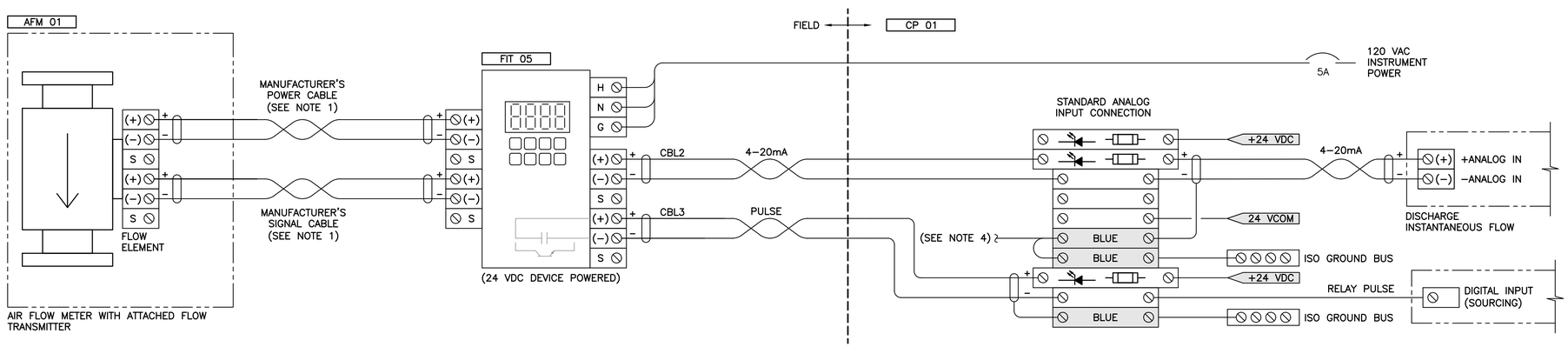

PLC	RACK	SLOT	CHAN.	DEVICE	CONFIG
PLC 01	01	02	03	FIT 05	4–20 mA

PLC	RACK	SLOT	CHAN.	DEVICE	CONFIG
PLC 01	01	09	04	FIT 05	24 VDC

NOTES:

1. MANUFACTURER'S RECOMMENDED CABLES FOR MAGNETIC COIL POWER AND FLOW SIGNAL SHALL BE CONNECTED WITHOUT BREAK OR SPLICE BETWEEN THE FLOW METER INDICATOR/TRANSMITTER AND THE FLOW ELEMENT IN THE METER VAULT.
2. NOT USED.
3. PROVIDE A SEPARATE FUSED 24 VDC INPUT TERMINAL PAIR JUST BELOW THE STANDARD 7–TERMINAL ANALOG GROUP FOR FLOW TOTALIZING PULSE SIGNAL.
4. FOR CLARITY, SHIELDS ARE NOT SHOWN CONNECTED ON THE FIELD SIDE OF THE STANDARD 7–TERMINAL ANALOG GROUP. CONNECT ALL SHIELDS AT THE TERMINAL SHOWN.

2 – INSTANTANEOUS AND TOTALIZED FLOW INSTRUMENTATION CONNECTION DIAGRAM

NOT TO SCALE

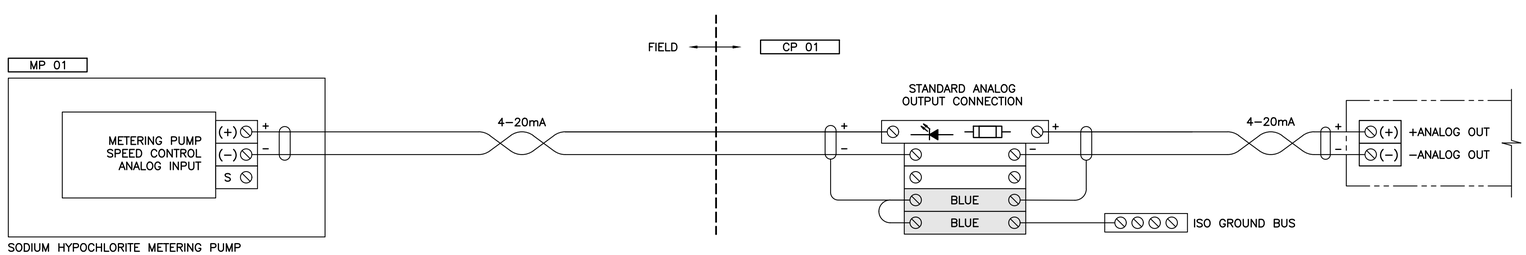

PLC	RACK	SLOT	CHAN.	DEVICE	CONFIG
PLC 01	01	07	00	MP 01	4–20 mA

NOTES:

1. METERING SPEED OUTPUTS ARE CONTROLLED BY THE PLC. 4 mA = 0% METERING OUTPUT, 20 mA = 100% METERING OUTPUT.
2. 120 VAC POWERED.

3 – ANALOG OUTPUT CONTROLS TO METERING PUMP INSTRUMENTATION CONNECTION DIAGRAM

NOT TO SCALE

Gray & Osborne, Inc.
CONSULTING ENGINEERS
1130 RAINIER AVENUE SOUTH, SUITE 300
SEATTLE, WASHINGTON 98144

DATE: SEPT 2022
DRAWN: PEB
CHECKED: PAM
APPROVED: MBS

No.	REVISION	DATE	APPD

MICHAEL B. SWEENEY — STATE OF WASHINGTON — 40506 — REGISTERED PROFESSIONAL ENGINEER — 9-26-22

CITY OF LACEY
THURSTON COUNTY WASHINGTON
BEACHCREST WELLFIELD pH IMPROVEMENTS
ANALOG LOOP DIAGRAM

SHEET: E-21
SHEET: 69 of 81
JOB NO.: 19520
DWG:E_ALD

L:\LACEY\19520 pH Predesign and S17 Facilities Design\PLANSET\E-Sheets\E_ALD.dwg, 9/26/2022 1:28 PM, LIZ BATES

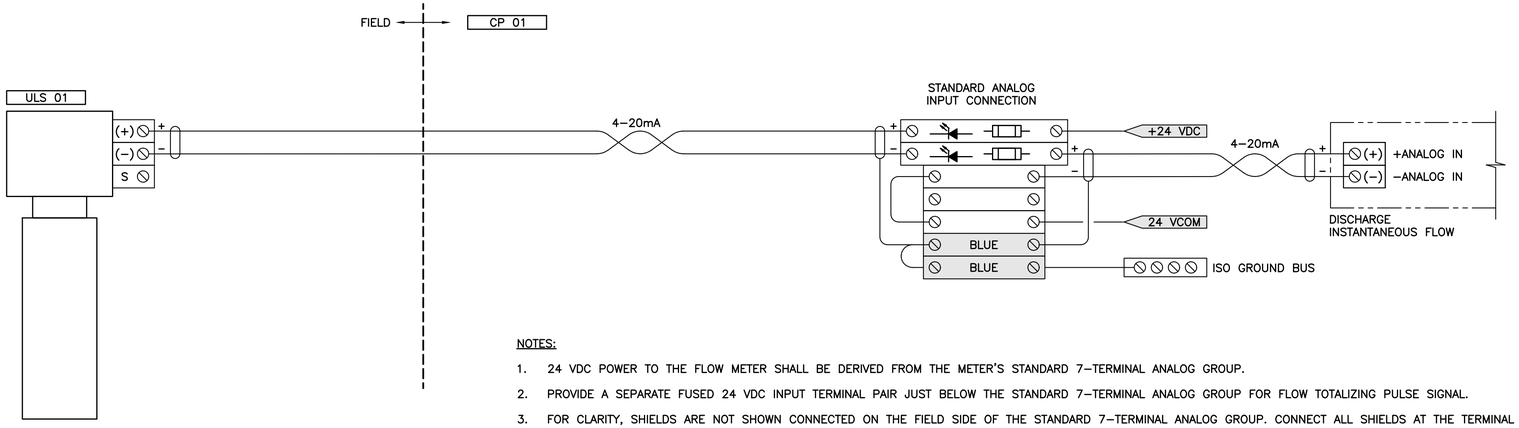

PLC	RACK	SLOT	CHAN.	DEVICE	CONFIG
PLC 01	01	01	03	ULS 01	4−20 mA

LOOP−POWERED ULTRASONIC LEVEL SENSOR

NOTES:

1. 24 VDC POWER TO THE FLOW METER SHALL BE DERIVED FROM THE METER'S STANDARD 7−TERMINAL ANALOG GROUP.
2. PROVIDE A SEPARATE FUSED 24 VDC INPUT TERMINAL PAIR JUST BELOW THE STANDARD 7−TERMINAL ANALOG GROUP FOR FLOW TOTALIZING PULSE SIGNAL.
3. FOR CLARITY, SHIELDS ARE NOT SHOWN CONNECTED ON THE FIELD SIDE OF THE STANDARD 7−TERMINAL ANALOG GROUP. CONNECT ALL SHIELDS AT THE TERMINAL SHOWN.

1 ULTRASONIC LEVEL SENSOR INSTRUMENTATION CONNECTION DIAGRAM

NOT TO SCALE

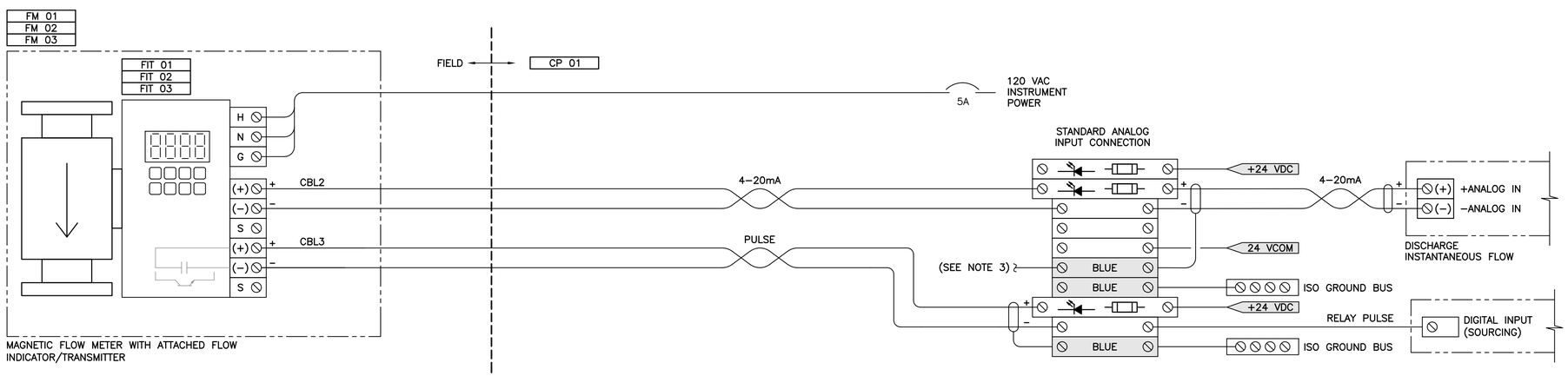

PLC	RACK	SLOT	CHAN.	DEVICE	CONFIG
PLC 01	01	02	00	FIT 01	4−20 mA
PLC 01	01	02	01	FIT 02	4−20 mA
PLC 01	01	02	02	FIT 03	4−20 mA

PLC	RACK	SLOT	CHAN.	DEVICE	CONFIG
PLC 01	01	09	00	FIT 01	24 VDC
PLC 01	01	09	01	FIT 02	24 VDC
PLC 01	01	09	02	FIT 03	24 VDC

MAGNETIC FLOW METER WITH ATTACHED FLOW
INDICATOR/TRANSMITTER

NOTES:

1. NOT USED.
2. PROVIDE A SEPARATE FUSED 24 VDC INPUT TERMINAL PAIR JUST BELOW THE STANDARD 7−TERMINAL ANALOG GROUP FOR FLOW TOTALIZING PULSE SIGNAL.
3. FOR CLARITY, SHIELDS ARE NOT SHOWN CONNECTED ON THE FIELD SIDE OF THE STANDARD 7−TERMINAL ANALOG GROUP. CONNECT ALL SHIELDS AT THE TERMINAL SHOWN.

2 INSTANTANEOUS AND TOTALIZED FLOW INSTRUMENTATION CONNECTION DIAGRAM

NOT TO SCALE

TERMINAL LEGEND:

BLUE — SHADED TERMINALS ARE USED FOR SHIELD CONNECTIONS TO ISOLATED GROUND. THESE TERMINALS ARE BLUE AND ARE NOT TO BE CONNECTED TO CHASSIS GROUND.

Gray & Osborne, Inc.
CONSULTING ENGINEERS
1130 RAINIER AVENUE SOUTH, SUITE 300
SEATTLE, WASHINGTON 98144

DATE: SEPT 2022
DRAWN: PEB
CHECKED: PAM
APPROVED: MBS

No.	REVISION	DATE	APPD

MICHAEL B. SWEENEY — STATE OF WASHINGTON — 52525 — REGISTERED PROFESSIONAL ENGINEER — 9-26-22

CITY OF LACEY
THURSTON COUNTY WASHINGTON
BEACHCREST WELLFIELD pH IMPROVEMENTS
ANALOG LOOP DIAGRAM

SHEET: E-22
SHEET: 70 of 81
JOB NO.: 19520
DWG:E_ALD

L:\LACEY\19520 pH Predesign and S17 Facilities Design\PLANSET\E-Sheets\E_ALD.dwg, 9/26/2022 1:28 PM, LIZ BATES

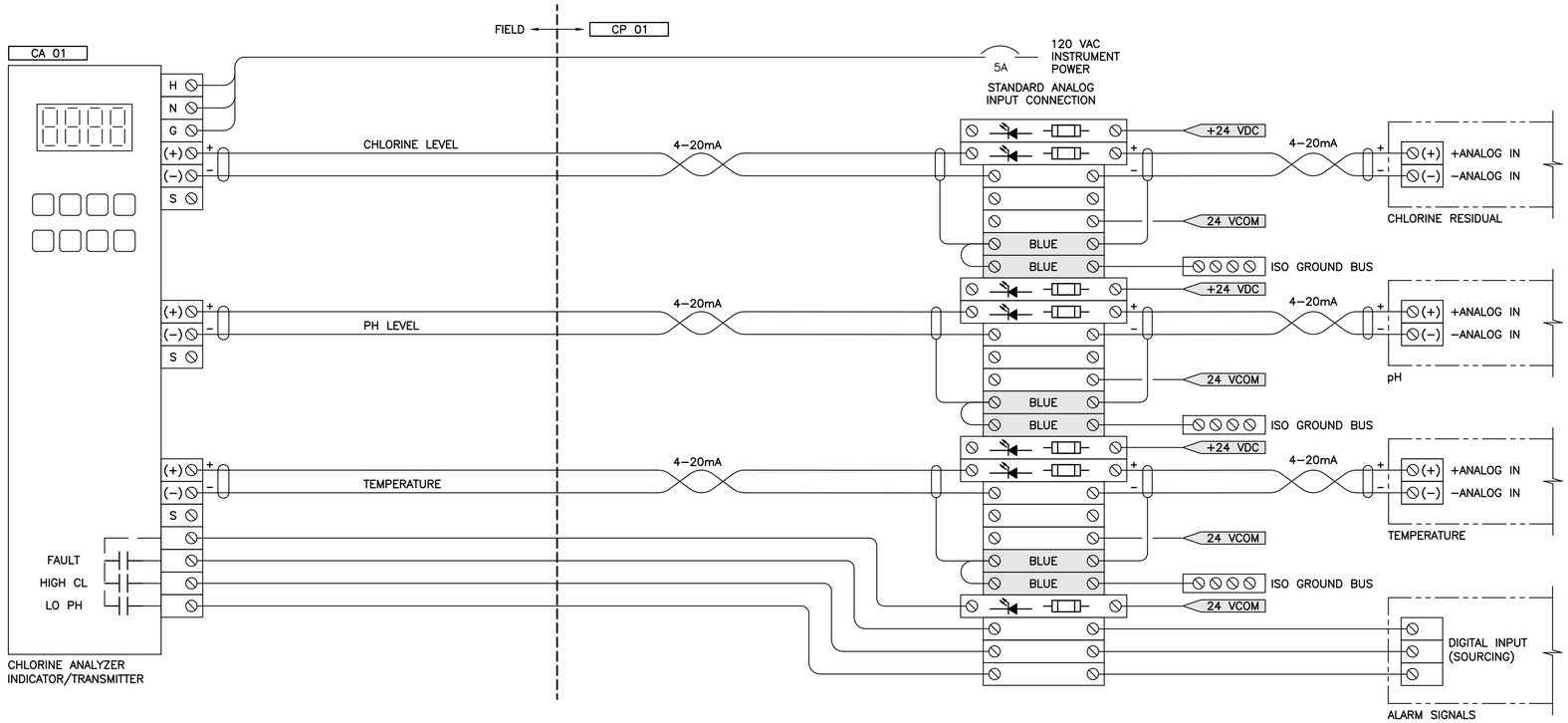

PLC	RACK	SLOT	CHAN.	DEVICE	CONFIG
PLC 01	01	04	00	CA 01	4−20 mA

PLC	RACK	SLOT	CHAN.	DEVICE	CONFIG
PLC 01	01	04	01	CA 01	4−20 mA

PLC	RACK	SLOT	CHAN.	DEVICE	CONFIG
PLC 01	01	04	02	CA 01	4−20 mA

PLC	RACK	SLOT	CHAN.	DEVICE	CONFIG
PLC 01	01	09	05	CA 01	24 VDC
PLC 01	01	09	06	CA 01	24 VDC
PLC 01	01	09	07	CA 01	24 VDC

NOTES:

1. CONTRACTOR SHALL BRING 1x 24 VDC COMMON TO ALARM CONTACTS AND RETURN WITH DRY ALARM OUTPUTS FOR HIGH CHLORINE, LOW PH, AND FAULT ALARMS.
2. 24 VDC POWER SHALL BE DERIVED TO THE ANALYZER FROM THE METER'S STANDARD 7−TERMINAL ANALOG GROUP.

1 – CHLORINE ANALYZER INSTRUMENTATION CONNECTION DIAGRAM

NOT TO SCALE

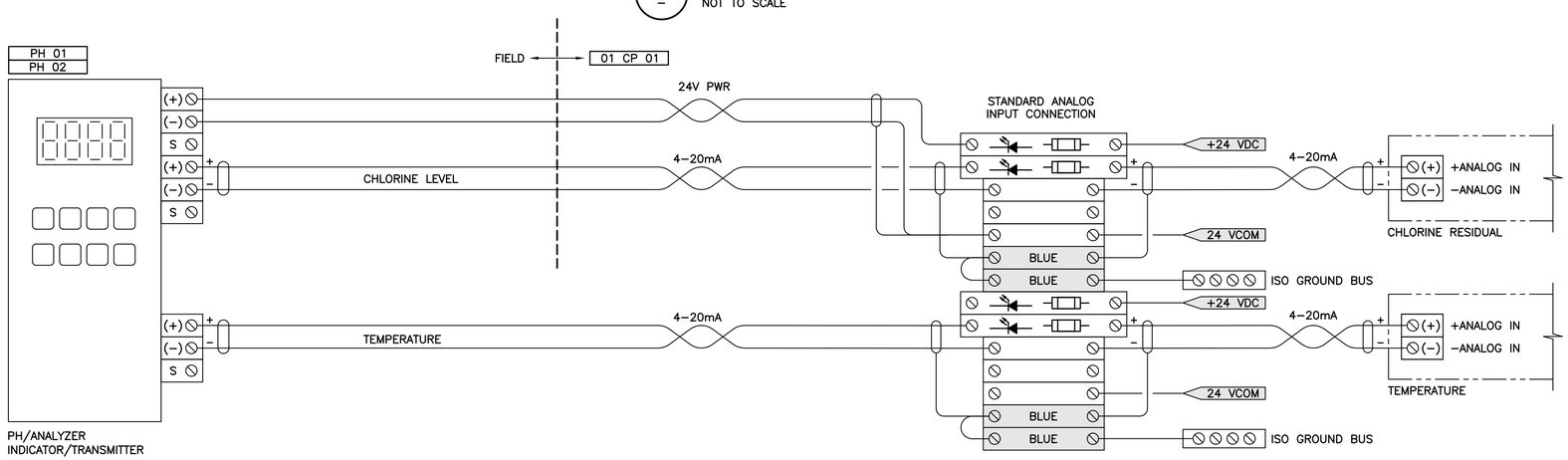

PLC	RACK	SLOT	CHAN.	DEVICE	CONFIG
PLC 01	01	03	02	PH 01	4−20 mA
PLC 01	01	03	03	PH 02	4−20 mA

PLC	RACK	SLOT	CHAN.	DEVICE	CONFIG
PLC 01	01	06	01	PH 01	4−20 mA
PLC 01	01	06	02	PH 02	4−20 mA

NOTES:

1. 24 VDC POWER SHALL BE DERIVED TO THE ANALYZER FROM THE METER'S STANDARD 7−TERMINAL ANALOG GROUP.

2 – PH ANALYZER INSTRUMENTATION CONNECTION DIAGRAM

NOT TO SCALE

Gray & Osborne, Inc.
CONSULTING ENGINEERS
1130 RAINIER AVENUE SOUTH, SUITE 300
SEATTLE, WASHINGTON 98144

DATE: SEPT 2022
DRAWN: PEB
CHECKED: PAM
APPROVED: MBS

No.	REVISION	DATE	APPD

MICHAEL B. SWEENEY — STATE OF WASHINGTON — 40000 — REGISTERED PROFESSIONAL ENGINEER — 9-26-22

CITY OF LACEY
THURSTON COUNTY WASHINGTON
BEACHCREST WELLFIELD pH IMPROVEMENTS
ANALOG LOOP DIAGRAM

SHEET: E-23
SHEET: 71 of 81
JOB NO.: 19520
DWG:E_ALD

L:\LACEY\19520 pH Predesign and S17 Facilities Design\PLANSET\E-Sheets\E_ALD.dwg, 9/26/2022 1:28 PM, LIZ BATES

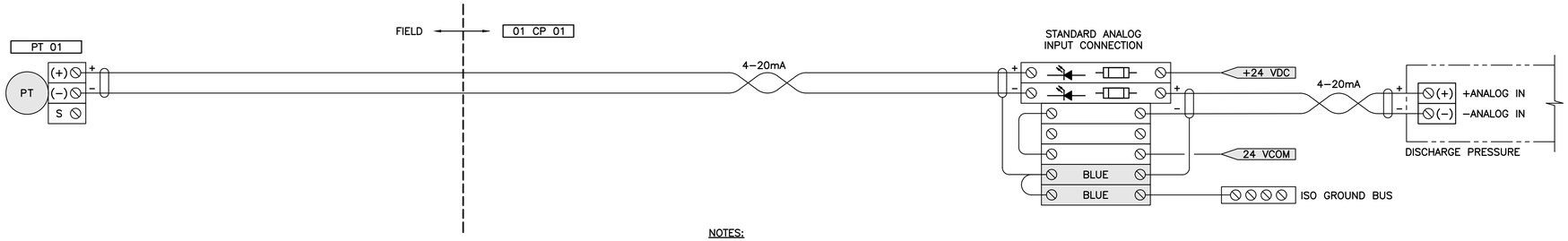

PLC	RACK	SLOT	CHAN.	DEVICE	CONFIG
01 PLC 01	01	06	00	PT 01	4−20 mA

NOTES:

1. PRESSURE TRANSMITTER IS LOOP−POWERED.

1 PRESSURE TRANSMITTER INSTRUMENTATION CONNECTION DIAGRAM

NOT TO SCALE

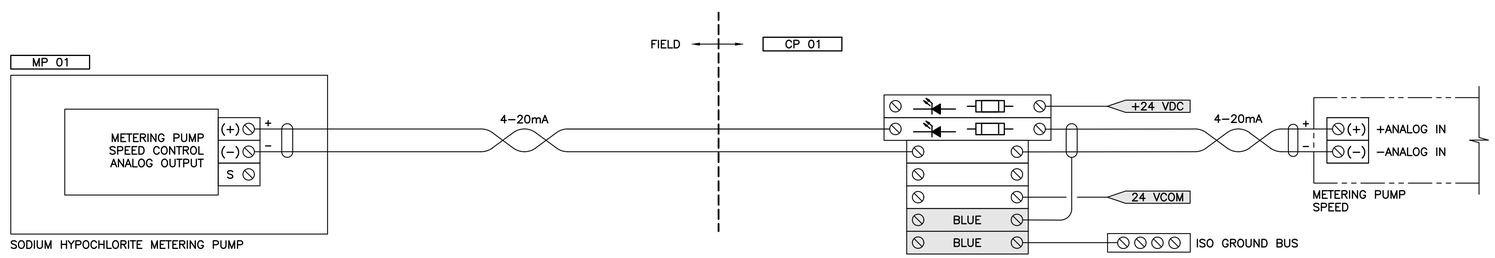

PLC	RACK	SLOT	CHAN.	DEVICE	CONFIG
PLC 01	01	04	03	MP 01	4−20 mA

NOTES:

1. METERING PUMP IS 120 VAC POWERED.

2 METERING PUMP ANALOG INPUT INSTRUMENTATION CONNECTION DIAGRAM

NOT TO SCALE

Gray & Osborne, Inc.
CONSULTING ENGINEERS
1130 RAINIER AVENUE SOUTH, SUITE 300
SEATTLE, WASHINGTON 98144

DATE: SEPT 2022
DRAWN: PEB
CHECKED: PAM
APPROVED: MBS

No.	REVISION	DATE	APPD

MICHAEL B. SWEENEY
STATE OF WASHINGTON
PROFESSIONAL ENGINEER
9-26-22

CITY OF LACEY
THURSTON COUNTY WASHINGTON
BEACHCREST WELLFIELD pH IMPROVEMENTS
ANALOG LOOP DIAGRAM

SHEET: E-24
SHEET: 72 of 81
JOB NO.: 19520
DWG:E_ALD

L:\LACEY\19520 pH Predesign and S17 Facilities Design\PLANSET\E-Sheets\E_ALD.dwg, 9/26/2022 1:28 PM, LIZ BATES

SLOT 01		ANALOG INPUT CARD, 4 CHANNEL, ISOLATED, 16-BIT, 4-20 mA		
CHANNEL		TAG NUMBER	TAG DESCRIPTION	I/O FUNCTION
NO.	ADDRESS			
0	01:00	SLT 01	LEVEL TRANSMITTER, WELL S15R	AQUIFER LEVEL
1	01:01	SLT 02	LEVEL TRANSMITTER, WELL S16	AQUIFER LEVEL
2	01:02	SLT 03	LEVEL TRANSMITTER, AERATION TREATMENT	TANK LEVEL
3	01:03	ULS 01	ULTRASONIC LEVEL SENSOR NO. 1, HYPOCHLORITE STORAGE TANK	LEVEL

SLOT 02		ANALOG INPUT CARD, 4 CHANNEL, ISOLATED, 16-BIT, 4-20 mA		
CHANNEL		TAG NUMBER	TAG DESCRIPTION	I/O FUNCTION
NO.	ADDRESS			
0	02:00	FIT 01	FLOW INDICATING TRANSMITTER, WELL PUMP S15R MAGNETIC FLOW METER NO. 1	FLOW
1	02:01	FIT 02	FLOW INDICATING TRANSMITTER, WELL PUMP S16 MAGNETIC FLOW METER NO. 2	FLOW
2	02:02	FIT 03	FLOW INDICATING TRANSMITTER, PACKAGE AERATION UNIT MAGNETIC FLOW METER NO. 3	FLOW
3	02:03	FIT 05	FLOW INDICATING TRANSMITTER, AIRFLOW METER	FLOW

SLOT 03		ANALOG INPUT CARD, 4 CHANNEL, ISOLATED, 16-BIT, 4-20 mA		
CHANNEL		TAG NUMBER	TAG DESCRIPTION	I/O FUNCTION
NO.	ADDRESS			
0	03:00	– – – –	HOT SPARE	
1	03:01	– – – –	HOT SPARE	
2	03:02	PH 01	PH ANALYZER TRANSMITTER NO. 1, PRE, PACKAGE AERATION UNIT	PH
3	03:03	PH 02	PH ANALYZER TRANSMITTER NO. 2, POST, PACKAGE AERATION UNIT	PH

SLOT 04		ANALOG INPUT CARD, 4 CHANNEL, ISOLATED, 16-BIT, 4-20 mA		
CHANNEL		TAG NUMBER	TAG DESCRIPTION	I/O FUNCTION
NO.	ADDRESS			
0	04:00	CA 01	CHLORINE ANALYZER	CHLORINE
1	04:01	CA 01	CHLORINE ANALYZER	PH
2	04:02	CA 01	CHLORINE ANALYZER	TEMPERATURE
3	04:03	MP 01	METERING PUMP NO. 1	SPEED FEEDBACK

SLOT 05		ANALOG INPUT CARD, 4 CHANNEL, ISOLATED, 16-BIT, 4-20 mA		
CHANNEL		TAG NUMBER	TAG DESCRIPTION	I/O FUNCTION
NO.	ADDRESS			
0	05:00	MS 03	MOTOR STARTER, AERATION BLOWER NO. 1	SPEED FEEDBACK
1	05:01	MS 05	MOTOR STARTER, BOOSTER PUMP NO. 1	SPEED FEEDBACK
2	05:02	MS 04	MOTOR STARTER, AERATION BLOWER NO. 2	SPEED FEEDBACK
3	05:03	MS 06	MOTOR STARTER, BOOSTER PUMP NO. 2	SPEED FEEDBACK

SLOT 06		ANALOG INPUT CARD, 4 CHANNEL, ISOLATED, 16-BIT, 4-20 mA		
CHANNEL		TAG NUMBER	TAG DESCRIPTION	I/O FUNCTION
NO.	ADDRESS			
0	06:00	PT 01	PRESSURE TRANSMITTER, SYSTEM DISCHARGE	PRESSURE
1	06:01	PH 01	PH ANALYZER TRANSMITTER NO. 1, PRE, PACKAGE AERATION UNIT	TEMPERATURE
2	06:02	PH 02	PH ANALYZER TRANSMITTER NO. 2, POST, PACKAGE AERATION UNIT	TEMPERATURE
3	06:03	– – – –	HOT SPARE	

SLOT 07		ANALOG OUTPUT CARD, 4 CHANNEL, ISOLATED, 16-BIT, 4-20 mA		
CHANNEL		TAG NUMBER	TAG DESCRIPTION	I/O FUNCTION
NO.	ADDRESS			
0	07:00	MP 01	METERING PUMP NO. 1	SPEED REQUEST
1	07:01	– – – –	HOT SPARE	
2	07:02	MS 03	MOTOR STARTER, AERATION BLOWER NO. 1	SPEED REQUEST
3	07:03	MS 04	MOTOR STARTER, AERATION BLOWER NO. 2	SPEED REQUEST

SLOT 08		ANALOG OUTPUT CARD, 4 CHANNEL, ISOLATED, 16-BIT, 4-20 mA		
CHANNEL		TAG NUMBER	TAG DESCRIPTION	I/O FUNCTION
NO.	ADDRESS			
0	08:00	MS 05	MOTOR STARTER, BOOSTER PUMP NO. 1	SPEED REQUEST
1	08:01	MS 06	MOTOR STARTER, BOOSTER PUMP NO. 2	SPEED REQUEST
2	08:02	– – – –	HOT SPARE	
3	08:03	– – – –	HOT SPARE	

SLOT 09		DIGITAL INPUT CARD, 16 CHANNEL, 24 VDC		
CHANNEL		TAG NUMBER	TAG DESCRIPTION	I/O FUNCTION
NO.	ADDRESS			
0	09:00	FIT 01	FLOW INDICATING TRANSMITTER, WELL PUMP S15R MAGNETIC FLOW METER NO. 1	TRUE = FLOW TOTALIZING PULSE
1	09:01	FIT 02	FLOW INDICATING TRANSMITTER, WELL PUMP S16 MAGNETIC FLOW METER NO. 2	TRUE = FLOW TOTALIZING PULSE
2	09:02	FIT 03	FLOW INDICATING TRANSMITTER, PACKAGE AERATION UNIT MAGNETIC FLOW METER NO. 3	TRUE = FLOW TOTALIZING PULSE
3	09:03	– – – –	HOT SPARE	
4	09:04	FIT 05	FLOW INDICATING TRANSMITTER, AIRFLOW METER	TRUE = FLOW TOTALIZING PULSE
5	09:05	CA 01	CHLORINE ANALYZER	TRUE = HIGH CHLORINE
6	09:06	CA 01	CHLORINE ANALYZER	TRUE = LOW PH
7	09:07	CA 01	CHLORINE ANALYZER	TRUE = 24 VDC VALID
8	09:08	CP 01	CONTROL PANEL, MAIN	TRUE = 24 VDC VALID
9	09:09	UPS 01	UPS 120V OUTPUT	TRUE = UPS 120V POWER VALID
10	09:10	CP 01	CONTROL PANEL, MAIN	TRUE = PRIMARY CONTROL POWER VALID
11	09:11	MCB 01	MCC CIRCUIT BREAKER, MAIN	TRUE = CLOSED
12	09:12	– – – –	HOT SPARE	
13	09:13	– – – –	HOT SPARE	
14	09:14	ISW 01–08	INTRUSION SWITCH, WELL S15 BUILDING (COMMON ALARM)	TRUE = CLOSED
15	09:15	ISW 09	INTRUSION SWITCH, WELL S16 ENCLOSURE	TRUE = CLOSED

SLOT 10		DIGITAL INPUT CARD, 16 CHANNEL, 24 VDC		
CHANNEL		TAG NUMBER	TAG DESCRIPTION	I/O FUNCTION
NO.	ADDRESS			
0	10:00	ATS 01	AUTOMATIC TRANSFER SWITCH	TRUE = IN UTILITY POSITION
1	10:01	ATS 01	AUTOMATIC TRANSFER SWITCH	TRUE = IN STANDBY POSITION
2	10:02	ATS 01	AUTOMATIC TRANSFER SWITCH	TRUE = FAULT
3	10:03	GEN 01	GENERATOR, AUXILIARY	TRUE = MAIN CIRCUIT BREAKER CLOSED
4	10:04	GEN 01	GENERATOR, AUXILIARY	TRUE = RUNNING
5	10:05	GEN 01	GENERATOR, AUXILIARY	TRUE = GENERAL ALARM (ALL GENERATOR FAULTS)
6	10:06	GEN 01	GENERATOR, AUXILIARY	TRUE = FAIL
7	10:07	GEN 01	GENERATOR, AUXILIARY	TRUE = NOT IN AUTO
8	10:08	SD 01	SMOKE DETECTOR, ELECTRICAL ROOM	TRUE = SMOKE DETECTED
9	10:09	SD 02	SMOKE DETECTOR, STORAGE ROOM	TRUE = SMOKE DETECTED
10	10:10	SD 03	SMOKE DETECTOR, HYPOCHLORITE ROOM	TRUE = SMOKE DETECTED
11	10:11	SD 04	SMOKE DETECTOR, BLOWER ROOM	TRUE = SMOKE DETECTED
12	10:12	SD 05	SMOKE DETECTOR, SOUTH, TREATMENT ROOM	TRUE = SMOKE DETECTED
13	10:13	LS 01	LEVEL SENSOR, PACKAGE AERATION UNIT	TRUE = LOW LEVEL ALARM
14	10:14	LS 02	LEVEL SENSOR, PACKAGE AERATION UNIT	TRUE = HIGH LEVEL ALARM
15	10:15	SD 06	SMOKE DETECTOR, NORTH, TREATMENT ROOM	TRUE = SMOKE DETECTED

SLOT 11		DIGITAL INPUT CARD, 16 CHANNEL, 120 VAC		
CHANNEL		TAG NUMBER	TAG DESCRIPTION	I/O FUNCTION
NO.	ADDRESS			
0	11:00	L 01	LIMIT SWITCH, HCV 01	TRUE = VALVE OPENED
1	11:01	L 02	LIMIT SWITCH, HCV 02	TRUE = VALVE CLOSED
2	11:02	L 03	LIMIT SWITCH, HCV 03	TRUE = VALVE OPENED
3	11:03	L 04	LIMIT SWITCH, HCV 04	TRUE = VALVE CLOSED
4	11:04	SD 07	SMOKE DETECTOR, S16 WELL BUILDING	TRUE = SMOKE DETECTED
5	11:05	MS 01	MOTOR STARTER, WELL PUMP S15R	TRUE = RUNNING
6	11:06	MS 02	MOTOR STARTER, WELL PUMP S16	TRUE = RUNNING
7	11:07	– – – –	HOT SPARE	
8	11:08			
9	11:09			
10	11:10			
11	11:11			
12	11:12			
13	11:13			
14	11:14			
15	11:15			

Gray & Osborne, Inc.
CONSULTING ENGINEERS
1130 RAINIER AVENUE SOUTH, SUITE 300
SEATTLE, WASHINGTON 98144

DATE: SEPT 2022 | DRAWN: PEB | CHECKED: PAM | APPROVED: MBS

No.	REVISION	DATE	APPD

MICHAEL B. SWENEY — STATE OF WASHINGTON — REGISTERED PROFESSIONAL ENGINEER — 22201 — 9-26-22

CITY OF LACEY
THURSTON COUNTY WASHINGTON
BEACHCREST WELLFIELD pH IMPROVEMENTS
PLC I/O TABLES

SHEET: E-25
SHEET: 73 of 81
JOB NO.: 19520
DWG:E_PLCIO

L:\LACEY\19520 pH Predesign and S17 Facilities Design\PLANSET\E-Sheets\E_PLCIO.dwg, 9/26/2022 1:29 PM, LIZ BATES

SLOT 12		DIGITAL INPUT CARD, 16 CHANNEL, 24 VDC		
CHANNEL		TAG NUMBER	TAG DESCRIPTION	I/O FUNCTION
NO.	ADDRESS			
0	12:00	SD 06	SMOKE DETECTOR, NORTH, TREATMENT ROOM	TRUE = SMOKE DETECTED
1	12:01	HOA 01	HAND OFF AUTO SELECTORS SWITCH, WELL PUMP S15R	TRUE = HAND
2	12:02	HOA 01	HAND OFF AUTO SELECTORS SWITCH, WELL PUMP S15R	TRUE = AUTO
3	12:03	HOA 02	HAND OFF AUTO SELECTORS SWITCH, WELL PUMP S16	TRUE = HAND
4	12:04	HOA 02	HAND OFF AUTO SELECTORS SWITCH, WELL PUMP S16	TRUE = AUTO
5	12:05	HOA 03	HAND OFF AUTO SELECTORS SWITCH, AERATION BLOWER NO. 1	TRUE = HAND
6	12:06	HOA 03	HAND OFF AUTO SELECTORS SWITCH, AERATION BLOWER NO. 1	TRUE = AUTO
7	12:07	HOA 04	HAND OFF AUTO SELECTORS SWITCH, AERATION BLOWER NO. 2	TRUE = HAND
8	12:08	HOA 04	HAND OFF AUTO SELECTORS SWITCH, AERATION BLOWER NO. 2	TRUE = AUTO
9	12:09	HOA 05	HAND OFF AUTO SELECTORS SWITCH, BOOSTER PUMP NO. 1	TRUE = HAND
10	12:10	HOA 05	HAND OFF AUTO SELECTORS SWITCH, BOOSTER PUMP NO. 1	TRUE = AUTO
11	12:11	HOA 06	HAND OFF AUTO SELECTORS SWITCH, BOOSTER PUMP NO. 2	TRUE = HAND
12	12:12	HOA 06	HAND OFF AUTO SELECTORS SWITCH, BOOSTER PUMP NO. 2	TRUE = AUTO
13	12:13		FAIL RESET	TRUE = RESET
14	12:14		RUNNING ON UPS POWER	TRUE = UPS POWER
15	12:15	– – – –	HOT SPARE	

SLOT 13		RELAY OUTPUT CARD, 16 CHANNEL, 24 VDC		
CHANNEL		TAG NUMBER	TAG DESCRIPTION	I/O FUNCTION
NO.	ADDRESS			
0	1300	MP 01	METERING PUMP NO. 1	TRUE = RUN REQUEST
1	13:01	– – – –	HOT SPARE	
2	13:02	MS 01	MOTOR STARTER, WELL PUMP S15R	TRUE = RUN REQUEST
3	13:03	MS 02	MOTOR STARTER, WELL PUMP S16	TRUE = RUN REQUEST
4	13:04	MS 03	MOTOR STARTER, AERATION BLOWER NO. 1	TRUE = RUN REQUEST
5	13:05	MS 04	MOTOR STARTER, AERATION BLOWER NO. 2	TRUE = RUN REQUEST
6	13:06	MS 05	MOTOR STARTER, BOOSTER PUMP NO. 1	TRUE = RUN REQUEST
7	13:07	MS 06	MOTOR STARTER, BOOSTER PUMP NO. 2	TRUE = RUN REQUEST
8	13:08	– – – –	HOT SPARE	
9	13:09	– – – –	HOT SPARE	
10	13:10	– – – –	HOT SPARE	
11	13:11	– – – –	HOT SPARE	
12	13:12	– – – –	HOT SPARE	
13	13:13	– – – –	HOT SPARE	
14	13:14	– – – –	HOT SPARE	
15	13:15	PLC 01	PROGRAMMABLE LOGIC CONTROLLER	TRUE = PLC VALID

Gray & Osborne, Inc.
CONSULTING ENGINEERS
1130 RAINIER AVENUE SOUTH, SUITE 300
SEATTLE, WASHINGTON 98144

DATE: SEPT 2022
DRAWN: PEB
CHECKED: PAM
APPROVED: MBS

No.	REVISION	DATE	APPD

MICHAEL B. SWEENEY
STATE OF WASHINGTON
PROFESSIONAL ENGINEER
9-26-22

CITY OF LACEY
THURSTON COUNTY WASHINGTON
BEACHCREST WELLFIELD pH IMPROVEMENTS
PLC I/O TABLES

SHEET: E-26
SHEET: 74 of 81
JOB NO.: 19520
DWG:E_PLCIO

L:\LACEY\19520 pH Predesign and S17 Facilities Design\PLANSET\E-Sheets\E_PLCIO.dwg, 9/26/2022 1:29 PM, LIZ BATES

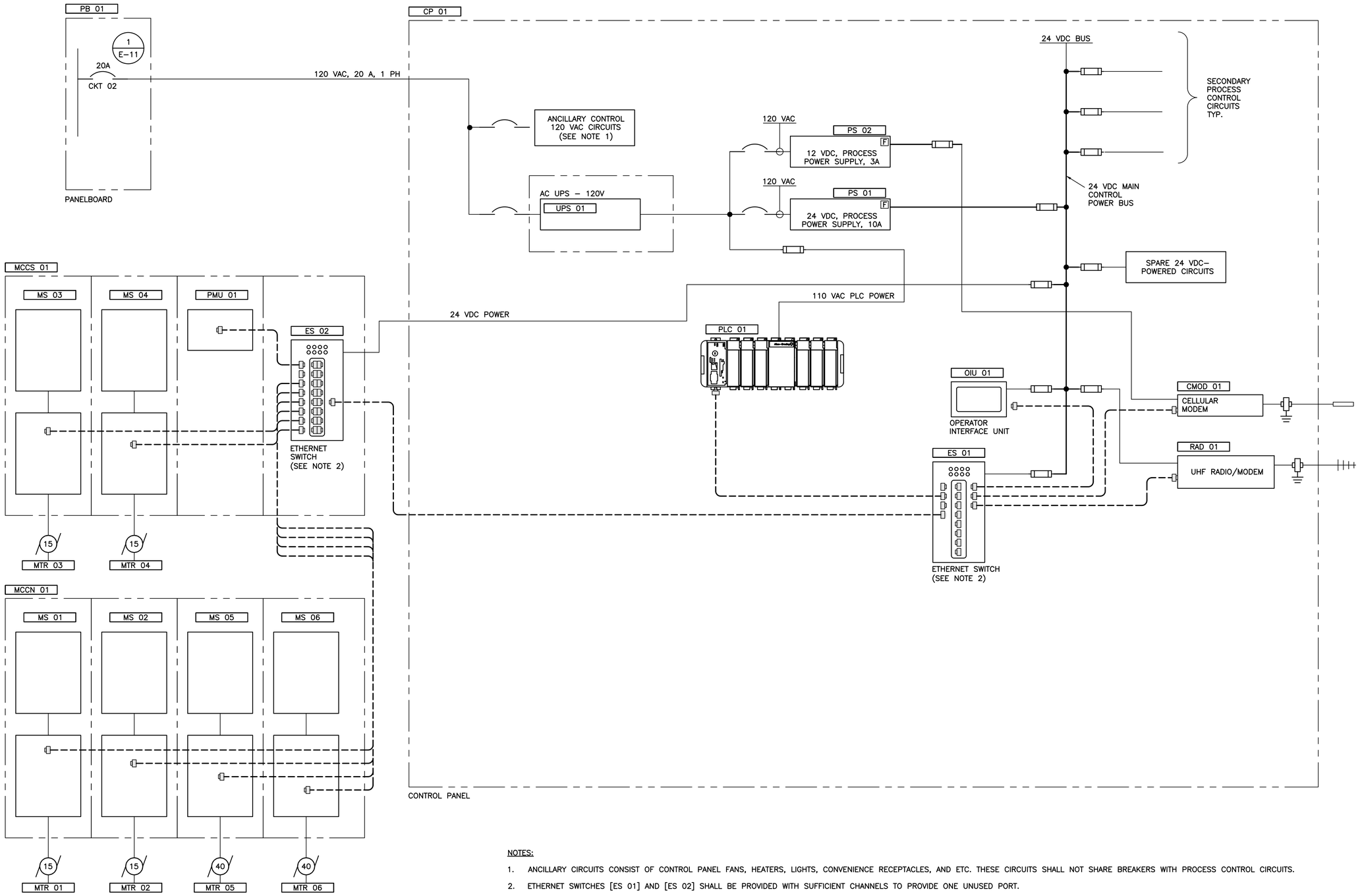

NOTES:

1. ANCILLARY CIRCUITS CONSIST OF CONTROL PANEL FANS, HEATERS, LIGHTS, CONVENIENCE RECEPTACLES, AND ETC. THESE CIRCUITS SHALL NOT SHARE BREAKERS WITH PROCESS CONTROL CIRCUITS.
2. ETHERNET SWITCHES [ES 01] AND [ES 02] SHALL BE PROVIDED WITH SUFFICIENT CHANNELS TO PROVIDE ONE UNUSED PORT.
3. IT IS UNDERSTOOD THAT DIFFERENT NETWORKING CONFIGURATIONS EXIST BETWEEN DIFFERENT MANUFACTURERS. THIS DIAGRAM ASSUMES ETHERNET IP COMMUNICATIONS.

LEGEND:

* ISBA UNITS ARE INTRINSICALLY SAFE ISOLATED ANALOG BARRIERS AND REQUIRE 24 VDC POWER.

** STATUS CONDITIONS FROM THE OLR THAT DISABLES THE MOTOR STARTER

[M] INDICATES DEVICES THAT ARE MONITORED FOR VALID POWER.

[F] INDICATES DEVICES THAT ARE MONITORED FOR FAULTS.

– – – ETHERNET LAN

1
–

PLC CONTROL PANEL POWER, NETWORKING, AND COMMUNICATION DISTRIBUTION BLOCK DIAGRAM

Gray & Osborne, Inc.
CONSULTING ENGINEERS
1130 RAINIER AVENUE SOUTH, SUITE 300
SEATTLE, WASHINGTON 98144

DATE: SEPT 2022	
DRAWN:	PEB
CHECKED:	PAM
APPROVED:	MBS

No.	REVISION	DATE	APPD

MICHAEL B. SWEENEY
STATE OF WASHINGTON
40629
PROFESSIONAL ENGINEER
9-26-22

CITY OF LACEY
THURSTON COUNTY WASHINGTON
BEACHCREST WELLFIELD pH IMPROVEMENTS
NETWORK DIAGRAM

SHEET: E-27
SHEET: 75 of 81

JOB NO.: 19520
DWG:E_NTWK

L:\LACEY\19520 pH Predesign and S17 Facilities Design\PLANSET\E-Sheets\E_NTWK.dwg, 9/26/2022 1:29 PM, LIZ BATES

POWER CABLE AND CONDUIT SCHEDULE

NUMBER	SOURCE	DESTINATION	SIZE	CONDUCTORS	E-1	NOTES
P0101A	[UT 01], UTILITY TRANSFORMER	[CTE 01], CURRENT TRANSFORMER ENCLOSURE	2"	3X #3/0 AWG XHHW-2; 1X #2/0 AWG XHHW-2 N		
P0101B	[UT 01], UTILITY TRANSFORMER	[CTE 01], CURRENT TRANSFORMER ENCLOSURE	2"	3X #3/0 AWG XHHW-2; 1X #2/0 AWG XHHW-2 N		
P0102A	[CTE 01], CURRENT TRANSFORMER ENCLOSURE	[MCB 01], MCC CIRCUIT BREAKER, MAIN	2"	3X #3/0 AWG XHHW-2; 1X #2/0 AWG XHHW-2 N; 1X #3 AWG XHHW-2 G		
P0102B	[CTE 01], CURRENT TRANSFORMER ENCLOSURE	[MCB 01], MCC CIRCUIT BREAKER, MAIN	2"	3X #3/0 AWG XHHW-2; 1X #2/0 AWG XHHW-2 N; 1X #3 AWG XHHW-2 G		
P0103	[GEN 01], GENERATOR, AUXILIARY	[ATS 01], AUTOMATIC TRANSFER SWITCH	3"	3X 500 KCM XHHW-2; 1X #2/0 AWG XHHW-2 N; 1X #3 AWG XHHW-2 G		
P0104	[MCB 03], MCC CIRCUIT BREAKER, NORTH WALL MOTOR CONTROL CENTER	[MCCN 01], MOTOR CONTROL CENTER, NORTH WALL	2"	3X #3/0 AWG XHHW-2; 1X #3 AWG XHHW-2 N; 1X #3 AWG XHHW-2 G		
P0105	[MCB 03], MCC CIRCUIT BREAKER, NORTH WALL MOTOR CONTROL CENTER	[MCCN 01], MOTOR CONTROL CENTER, NORTH WALL	2"	3X #3/0 AWG XHHW-2; 1X #3 AWG XHHW-2 N; 1X #3 AWG XHHW-2 G		
P0106	[MS 03], MOTOR STARTER, AERATION BLOWER NO. 1	[MSDS 03], MOTOR SAFETY DISCONNECT SWITCH, AERATION BLOWER NO. 1	3/4"	3X #8 AWG XHHW-2; 1X #8 AWG XHHW-2 G		
P0107	[MSDS 03], MOTOR SAFETY DISCONNECT SWITCH, AERATION BLOWER NO. 1	[MTR 03], MOTOR, AERATION BLOWER NO. 1	3/4"	3X #8 AWG XHHW-2; 1X #8 AWG XHHW-2 G		
P0108	[MS 04], MOTOR STARTER, AERATION BLOWER NO. 2	[MSDS 04], MOTOR SAFETY DISCONNECT SWITCH, AERATION BLOWER NO. 2	3/4"	3X #8 AWG XHHW-2; 1X #8 AWG XHHW-2 G		
P0109	[MSDS 04], MOTOR SAFETY DISCONNECT SWITCH, AERATION BLOWER NO. 2	[MTR 04], MOTOR, AERATION BLOWER NO. 2	3/4"	3X #8 AWG XHHW-2; 1X #8 AWG XHHW-2 G		
P0110	[MS 01], MOTOR STARTER, WELL PUMP S15R	[MSDS 01], MOTOR SAFETY DISCONNECT SWITCH, WELL PUMP S15R	3/4"	3X #10 AWG XHHW-2; 1X #10 AWG XHHW-2 G		
P0111	[MSDS 01], MOTOR SAFETY DISCONNECT SWITCH, WELL PUMP S15R	[MTR 01], MOTOR, WELL PUMP S15R	3/4"	3X #10 AWG XHHW-2; 1X #10 AWG XHHW-2 G		
P0112	[MS 02], MOTOR STARTER, WELL PUMP S16	[MSDS 02], MOTOR SAFETY DISCONNECT SWITCH, WELL PUMP S16	3/4"	3X #10 AWG XHHW-2; 1X #10 AWG XHHW-2 G		
P0113	[MSDS 02], MOTOR SAFETY DISCONNECT SWITCH, WELL PUMP S16	[MTR 02], MOTOR, WELL PUMP S16	3/4"	3X #10 AWG XHHW-2; 1X #10 AWG XHHW-2 G		
P0114	[MS 05], MOTOR STARTER, BOOSTER PUMP NO. 1	[MSDS 05], MOTOR SAFETY DISCONNECT SWITCH, BOOSTER PUMP NO. 1	1-1/4"	3X #4 AWG XHHW-2; 1X #4 AWG XHHW-2 G		
P0115	[MSDS 05], MOTOR SAFETY DISCONNECT SWITCH, BOOSTER PUMP NO. 1	[MTR 05], MOTOR, BOOSTER PUMP NO. 1	1-1/4"	3X #4 AWG XHHW-2; 1X #4 AWG XHHW-2 G		
P0116	[MS 06], MOTOR STARTER, BOOSTER PUMP NO. 2	[MSDS 06], MOTOR SAFETY DISCONNECT SWITCH, BOOSTER PUMP NO. 2	1-1/4"	3X #4 AWG XHHW-2; 1X #4 AWG XHHW-2 G		
P0117	[MSDS 06], MOTOR SAFETY DISCONNECT SWITCH, BOOSTER PUMP NO. 2	[MTR 06], MOTOR, BOOSTER PUMP NO. 2	1-1/4"	3X #4 AWG XHHW-2; 1X #4 AWG XHHW-2 G		
P0118	[CTE 01], CURRENT TRANSFORMER ENCLOSURE	[MB 01], METER BASE	1"	PROVIDED BY ELECTRICAL UTILITY		
P0119	[PB 01], PANELBOARD 208/120V, WELL S15R BUILDING	[GADP 01], AUXILIARY DEVICE PANEL, AUXILIARY GENERATOR	1"	2X #8 AWG XHHW-2; 1X #8 AWG XHHW-2 N; 1X #8 AWG XHHW-2 G		
P0120	[PB 01], PANELBOARD 208/120V, WELL S15R BUILDING	[PB 02], PANELBOARD 208/120V, S16 ENCLOSURE	3/4"	2X #8 AWG XHHW-2; 1X #8 AWG XHHW-2 N; 1X #10 AWG XHHW-2 G		
P0121	[PB 01], PANELBOARD 208/120V, WELL S15R BUILDING	[GO 01], MOTORIZED GATE OPERATOR NO. 1, ENTRANCE	3/4"	1X #8 AWG XHHW-2; 1X #8 AWG XHHW-2 N; 1X #8 AWG XHHW-2 G		
P0122	[PB 01], PANELBOARD 208/120V, WELL S15R BUILDING	[GO 02], MOTORIZED GATE OPERATOR NO. 2, EXIT	3/4"	1X #8 AWG XHHW-2; 1X #8 AWG XHHW-2 N; 1X #8 AWG XHHW-2 G		
P0123	[PB 01], PANELBOARD 208/120V, WELL S15R BUILDING	[CP 01], CONTROL PANEL, MAIN	3/4"	3X #12 AWG XHHW-2; 3X #12 AWG XHHW-2 N; 1X #10 AWG XHHW-2 G; 1X #12 AWG XHHW-2 G		CONTROL PANEL POWER
P0124	[PB 01], PANELBOARD 208/120V, WELL S15R BUILDING	[RDOS 01] ROLLUP DOOR OPERATOR SYSTEM	1/2"	1X #12 AWG XHHW-2; 1X #12 AWG XHHW-2 N; 1X #12 AWG XHHW-2 G		
P0125	[CP 01], CONTROL PANEL, MAIN	[FIT 01], FLOW INDICATING TRANSMITTER, WELL PUMP S15R MAGNETIC FLOW METER NO. 1	1/2"	1X #12 AWG XHHW-2; 1X #12 AWG XHHW-2 N; 1X #12 AWG XHHW-2 G		
P0126	[CP 01], CONTROL PANEL, MAIN	[FIT 02], FLOW INDICATING TRANSMITTER, WELL PUMP S16 MAGNETIC FLOW METER NO. 2	1"	1X #12 AWG XHHW-2; 1X #12 AWG XHHW-2 N; 1X #12 AWG XHHW-2 G		
P0127	[CP 01], CONTROL PANEL, MAIN	[FIT 03], FLOW INDICATING TRANSMITTER, PACKAGE AERATION UNIT MAGNETIC FLOW METER NO. 3	1/2"	1X #12 AWG XHHW-2; 1X #12 AWG XHHW-2 N; 1X #12 AWG XHHW-2 G		
P0128	[CP 01], CONTROL PANEL, MAIN	[FIT 05], FLOW INDICATING TRANSMITTER, AIRFLOW METER	1/2"	1X #12 AWG XHHW-2; 1X #12 AWG XHHW-2 N; 1X #12 AWG XHHW-2 G		
P0129	[PB 01], PANELBOARD 208/120V, WELL S15R BUILDING	RECEPTACLES, ELECTRICAL ROOM, STORAGE ROOM	3/4"	1X #12 AWG XHHW-2; 1X #12 AWG XHHW-2 N; 1X #12 AWG XHHW-2 G		
P0130	[PB 01], PANELBOARD 208/120V, WELL S15R BUILDING	RECEPTACLES, CHLORINE ROOM, BLOWER ROOM, AND DEDICATED	3/4"	3X #12 AWG XHHW-2; 3X #12 AWG XHHW-2 N; 1X #12 AWG XHHW-2 G		
P0131	[PB 01], PANELBOARD 208/120V, WELL S15R BUILDING	RECEPTACLES, TREATMENT ROOM	3/4"	2X #10 AWG XHHW-2; 2X #10 AWG XHHW-2 N; 1X #10 AWG XHHW-2 G		
P0132	[PB 01], PANELBOARD 208/120V, WELL S15R BUILDING	INTERIOR LIGHTING, TREATMENT ROOM	3/4"	1X #12 AWG XHHW-2; 1X #12 AWG XHHW-2 N; 1X #12 AWG XHHW-2 G		
P0133	[PB 01], PANELBOARD 208/120V, WELL S15R BUILDING	INTERIOR LIGHTING, ELECTRICAL ROOM, CHLORINE ROOM, AND BLOWER ROOM	3/4"	1X #12 AWG XHHW-2; 1X #12 AWG XHHW-2 N; 1X #12 AWG XHHW-2 G		
P0134	[PB 01], PANELBOARD 208/120V, WELL S15R BUILDING	[C 02], CONTROL PANEL, EXTERIOR LIGHTING	3/4"	1X #8 AWG XHHW-2; 1X #8 AWG XHHW-2 N; 1X #8 AWG XHHW-2 G		
P0135	[CP 02], CONTROL PANEL, EXTERIOR LIGHTING	EXTERIOR BUILDING LIGHTING, NORTH	3/4"	1X #12 AWG XHHW-2; 1X #12 AWG XHHW-2 N; 1X #12 AWG XHHW-2 G		
P0136	[CP 02], CONTROL PANEL, EXTERIOR LIGHTING	EXTERIOR BUILDING LIGHTING, SOUTH	3/4"	1X #12 AWG XHHW-2; 1X #12 AWG XHHW-2 N; 1X #12 AWG XHHW-2 G		
P0137	[PB 01], PANELBOARD 208/120V, WELL S15R BUILDING	[C 01], CONTROL TIMER, EXHAUST FAN NO. 1	3/4"	1X #12 AWG XHHW-2; 1X #12 AWG XHHW-2 N; 1X #12 AWG XHHW-2 G		
P0138	NOT USED					
P0139	NOT USED					
P0140	NOT USED					
P0141	NOT USED					
P0142	[C 01], CONTROL TIMER, EXHAUST FAN NO. 1	[EF 01], EXHAUST FAN NO. 1	3/4"	1X #12 AWG XHHW-2; 1X #12 AWG XHHW-2 N; 1X #12 AWG XHHW-2 G		
P0143	[PB 01], PANELBOARD 208/120V, WELL S15R BUILDING	[SDS 01], SAFETY DISCONNECT SWITCH, HEAT PUMP	3/4"	2X #10 AWG XHHW-2; 1X #10 AWG XHHW-2 G		
P0144	[SDS 01], SAFETY DISCONNECT SWITCH, HEAT PUMP	[HP 01], HEAT PUMP	3/4"	2X #10 AWG XHHW-2; 1X #10 AWG XHHW-2 G		
P0145	[HP 01], HEAT PUMP	[SDS 02], SAFETY DISCONNECT SWITCH	3/4"	2X #10 AWG XHHW-2; 1X #10 AWG XHHW-2 G		
P0146	[SDS 02], SAFETY DISCONNECT SWITCH	[FC 01], FAN COIL, WALL MOUNTED, HEAT PUMP	3/4"	2X #10 AWG XHHW-2; 1X #10 AWG XHHW-2 G		
P0147	[MCB 04], MCC CIRCUIT BREAKER, 3KW HEATER NO. 1	[HT 01], HEATER NO. 1, 3KW	3/4"	3X #12 AWG XHHW-2; 1X #12 AWG XHHW-2 G		
P0148	[MCB 07], MCC CIRCUIT BREAKER, 3KW HEATER NO. 4	[HT 04], HEATER NO. 4, 3KW	3/4"	3X #12 AWG XHHW-2; 1X #12 AWG XHHW-2 G		
P0149	[MCB 05], MCC CIRCUIT BREAKER, 3KW HEATER NO. 2	[HT 02], HEATER NO. 2, 3KW	3/4"	3X #12 AWG XHHW-2; 1X #12 AWG XHHW-2 G		
P0150	[MCB 06], MCC CIRCUIT BREAKER, 3KW HEATER NO. 3	[HT 03], HEATER NO. 3, 3KW	3/4"	3X #12 AWG XHHW-2; 1X #12 AWG XHHW-2 G		
P0151	[PB 01], PANELBOARD 208/120V, WELL S15R BUILDING	[SDS 03], SAFETY DISCONNECT SWITCH, SUPPLY FAN	3/4"	1X #12 AWG XHHW-2; 1X #12 AWG XHHW-2 N; 1X #12 AWG XHHW-2 G		
P0152	[SDS 03], SAFETY DISCONNECT SWITCH, SUPPLY FAN	[SF 01], SUPPLY FAN	3/4"	1X #12 AWG XHHW-2; 1X #12 AWG XHHW-2 N; 1X #12 AWG XHHW-2 G		
P0153	[PB 01], PANELBOARD 208/120V, WELL S15R BUILDING	[CEP 02], COMMUNICATION EQUIPMENT POLE NO. 2	3/4"	1X #12 AWG XHHW-2; 1X #12 AWG XHHW-2 N; 1X #12 AWG XHHW-2 G		
P0154	[MCB 05], MCC CIRCUIT BREAKER, WATER HEATER	[MSDS 07] MOTOR SAFETY DISCONNECT SWITCH	3/4"	3X #8 AWG XHHW-2; 1X #10 AWG XHHW-2 G		
P0155	[MSDS 07] MOTOR SAFETY DISCONNECT SWITCH	[WH 01], WATER HEATER (20KW)	3/4"	3X #8 AWG XHHW-2; 1X #10 AWG XHHW-2 G		
P0156~	ELECTRICAL ROOM NE CORNER	STUB OUT 2' AND CAP	1"	PULL STRING		

CONTROL CABLE AND CONDUIT SCHEDULE

NUMBER	SOURCE	DESTINATION	SIZE	CONDUCTORS	E-1	NOTES
C0101	[MS 03], MOTOR STARTER, AERATION BLOWER NO. 1	[MSDS 03], MOTOR SAFETY DISCONNECT SWITCH, AERATION BLOWER NO. 1	3/4"	6X #14 AWG XHHW-2		OVER TEMPERATURE, AND MSDS STATUS, 2X #14 ARE SPARE
C0101A	[MSDS 03], MOTOR SAFETY DISCONNECT SWITCH, AERATION BLOWER NO. 1	[MTR 03], MOTOR, AERATION BLOWER NO. 1	3/4"	2X #14 AWG XHHW-2		OVER TEMPERATURE STATUS
C0102	[MS 04], MOTOR STARTER, AERATION BLOWER NO. 2	[MSDS 04], MOTOR SAFETY DISCONNECT SWITCH, AERATION BLOWER NO. 2	3/4"	6X #14 AWG XHHW-2		OVER TEMPERATURE, AND MSDS STATUS, 2X #14 ARE SPARE
C0102A	[MSDS 04], MOTOR SAFETY DISCONNECT SWITCH, AERATION BLOWER NO. 2	[MTR 04], MOTOR, AERATION BLOWER NO. 2	3/4"	2X #14 AWG XHHW-2		OVER TEMPERATURE STATUS
C0103	[MS 05], MOTOR STARTER, BOOSTER PUMP NO. 1	[MSDS 05], MOTOR SAFETY DISCONNECT SWITCH, BOOSTER PUMP NO. 1	3/4"	6X #14 AWG XHHW-2		OVER TEMPERATURE, AND MSDS STATUS, 2X #14 ARE SPARE
C0103A	[MSDS 05], MOTOR SAFETY DISCONNECT SWITCH, BOOSTER PUMP NO. 1	[MTR 05], MOTOR, BOOSTER PUMP NO. 1	3/4"	2X #14 AWG XHHW-2		OVER TEMPERATURE STATUS
C0104	[MS 06], MOTOR STARTER, BOOSTER PUMP NO. 2	[MSDS 06], MOTOR SAFETY DISCONNECT SWITCH, BOOSTER PUMP NO. 2	3/4"	6X #14 AWG XHHW-2		OVER TEMPERATURE, AND MSDS STATUS, 2X #14 ARE SPARE
C0104A	[MSDS 06], MOTOR SAFETY DISCONNECT SWITCH, BOOSTER PUMP NO. 2	[MTR 06], MOTOR, BOOSTER PUMP NO. 2	3/4"	2X #14 AWG XHHW-2		OVER TEMPERATURE STATUS
C0105	[MS 01], MOTOR STARTER, WELL PUMP S15R	[MSDS 01], MOTOR SAFETY DISCONNECT SWITCH, WELL PUMP S15R	3/4"	4X #14 AWG XHHW-2		MSDS STATUS, 2X #14 ARE SPARE
C0106	[MS 02], MOTOR STARTER, WELL PUMP S16	JUNCTION BOX JS0102	3/4"	4X #14 AWG XHHW-2		MSDS STATUS, 2X #14 ARE SPARE
C0106A	JUNCTION BOX JS0102	[MSDS 02], MOTOR SAFETY DISCONNECT SWITCH, WELL PUMP S16	3/4"	4X #14 AWG XHHW-2		MSDS STATUS, 2X #14 ARE SPARE
C0107	[ATS 01], AUTOMATIC TRANSFER SWITCH	[GCP 01], CONTROL PANEL, AUXILIARY GENERATOR	3/4"	2X #14 AWG XHHW-2		GENERATOR RUN REQUEST
C0108	[CP 01], CONTROL PANEL, MAIN	[ATS 01], AUTOMATIC TRANSFER SWITCH	3/4"	6X #14 AWG XHHW-2		ATS STATUS
C0109	[CP 01], CONTROL PANEL, MAIN	[GCP 01], CONTROL PANEL, AUXILIARY GENERATOR	1"	18X #14 AWG XHHW-2		GENERATOR STATUS, 4X #14 ARE SPARE
C0110	[CP 01], CONTROL PANEL, MAIN	[MCCS 01], MOTOR CONTROL CENTER, SOUTH WALL	2"	10X #14 AWG XHHW-2; 4X 8-C, 4-TP, #23 AWG, CAT6		MS AND PMU COMMUNICATION, 1X CAT6 IS SPARE AND [MCB 01], 2X SPD, AND PMU STATUS, 2X #14 ARE SPARE
C0111	[CP 01], CONTROL PANEL, MAIN	[MCCN 01], MOTOR CONTROL CENTER, NORTH WALL	2"	5X 8-C, 4-TP, #23 AWG, CAT6		MS COMMUNICATION, 1X CAT6 IS SPARE
C0112	[CP 01], CONTROL PANEL, MAIN	[SD 01], SMOKE DETECTOR, WEST, ELECTRICAL ROOM	1"	14X #14 AWG XHHW-2; 1X #12 AWG XHHW-2 G		SD STATUS, 2X #14 ARE 24 VDC POWER
C0112A	[SD 01], SMOKE DETECTOR, WEST, ELECTRICAL ROOM	[SD 02], SMOKE DETECTOR, EAST, ELECTRICAL ROOM	1"	12X #14 AWG XHHW-2; 1X #12 AWG XHHW-2 G		

Gray & Osborne, Inc.
CONSULTING ENGINEERS
1130 RAINIER AVENUE SOUTH, SUITE 300
SEATTLE, WASHINGTON 98144

DATE: SEPT 2022 | DRAWN: PEB | CHECKED: PAM | APPROVED: MBS

No.	REVISION	DATE	APPD

MICHAEL B. SWEENEY — STATE OF WASHINGTON — REGISTERED PROFESSIONAL ENGINEER — 22-24-22

CITY OF LACEY
THURSTON COUNTY WASHINGTON
BEACHCREST WELLFIELD pH IMPROVEMENTS
CABLE AND CONDUIT SCHEDULES

SHEET: EC-1
SHEET: 76 of 81

JOB NO.: 19520
DWG:E_CCS

L:\LACEY\19520 pH Predesign and S17 Facilities Design\PLANSET\E-Sheets\E_CCS.dwg, 9/26/2022 1:30 PM, LIZ BATES

CONTROL CABLE AND CONDUIT SCHEDULE

NUMBER	SOURCE	DESTINATION	SIZE	CONDUCTORS	E-1	NOTES
C0112B	[SD 02], SMOKE DETECTOR, EAST, ELECTRICAL ROOM	[SD 04], SMOKE DETECTOR, BLOWER ROOM	3/4"	10X #14 AWG XHHW-2; 1X #12 AWG XHHW-2 G		
C0112C	[SD 04], SMOKE DETECTOR, BLOWER ROOM	[SD 03], SMOKE DETECTOR, HYPOCHLORITE ROOM	3/4"	8X #14 AWG XHHW-2; 1X #12 AWG XHHW-2 G		
C0112D	[SD 03], SMOKE DETECTOR, HYPOCHLORITE ROOM	[SD 05], SMOKE DETECTOR, SOUTH, TREATMENT ROOM	3/4"	6X #14 AWG XHHW-2; 1X #12 AWG XHHW-2 G		
C0112E	[SD 05], SMOKE DETECTOR, SOUTH, TREATMENT ROOM	[SD 06], SMOKE DETECTOR, NORTH, TREATMENT ROOM	3/4"	4X #14 AWG XHHW-2; 1X #12 AWG XHHW-2 G		
C0113	[CP 01], CONTROL PANEL, MAIN	JUNCTION BOX JC0113	3/4"	8X #14 AWG XHHW-2; 1X #12 AWG XHHW-2 G		
C0113A	JUNCTION BOX JC0113	[ISW 03], INTRUSION SWITCH, HYPOCHLORITE ROOM	3/4"	MANUFACTURER'S CABLE		
C0113B	JUNCTION BOX JC0113	JUNCTION BOX JC0113B	3/4"	6X #14 AWG XHHW-2; 1X #12 AWG XHHW-2 G		
C0113C	JUNCTION BOX JC0113B	[ISW 05], INTRUSION SWITCH, SOUTHWEST, TREATMENT ROOM	3/4"	MANUFACTURER'S CABLE		
C0113D	JUNCTION BOX JC0113B	JUNCTION BOX JC0113D	3/4"	4X #14 AWG XHHW-2; 1X #12 AWG XHHW-2 G		
C0113E	JUNCTION BOX JC0113D	[ISW 06], INTRUSION SWITCH, ROLL UP DOOR, TREATMENT ROOM	3/4"	MANUFACTURER'S CABLE		
C0113F	JUNCTION BOX JC0113D	JUNCTION BOX JC0113F	3/4"	2X #14 AWG XHHW-2; 1X #12 AWG XHHW-2 G		
C0113G	JUNCTION BOX JC0113F	[ISW 07], INTRUSION SWITCH, NORTHWEST, TREATMENT ROOM	3/4"	MANUFACTURER'S CABLE		
C0114	[CP 01], CONTROL PANEL, MAIN	JUNCTION BOX JC0114	3/4"	8X #14 AWG XHHW-2; 1X #12 AWG XHHW-2 G		
C0114A	JUNCTION BOX JC0114	[ISW 01], INTRUSION SWITCH, WEST DOOR, ELECTRICAL ROOM	3/4"	MANUFACTURER'S CABLE		
C0114B	JUNCTION BOX JC0114	JUNCTION BOX JC0114B	3/4"	6X #14 AWG XHHW-2; 1X #12 AWG XHHW-2 G		
C0114C	JUNCTION BOX JC0114B	[ISW 02], INTRUSION SWITCH, EAST DOOR, ELECTRICAL ROOM	3/4"	MANUFACTURER'S CABLE		
C0114D	JUNCTION BOX JC0114B	JUNCTION BOX JC0114D	3/4"	4X #14 AWG XHHW-2; 1X #12 AWG XHHW-2 G		
C0114E	JUNCTION BOX JC0114D	[ISW 04], INTRUSION SWITCH, BLOWER ROOM	3/4"	MANUFACTURER'S CABLE		
C0114F	JUNCTION BOX JC0114D	JUNCTION BOX JC0114F	3/4"	2X #14 AWG XHHW-2; 1X #12 AWG XHHW-2 G		
C0114G	JUNCTION BOX JC0114F	[ISW 08], INTRUSION SWITCH, SOUTHEAST, TREATMENT ROOM	3/4"	MANUFACTURER'S CABLE		
C0115	[CP 02], CONTROL PANEL, EXTERIOR LIGHTING	[PC 01], PHOTO CELL	3/4"	2X #12 AWG XHHW-2; 1X #12 AWG XHHW-2 N; 1X #12 AWG XHHW-2 G		
C0116	[FC 01], FAN COIL, WALL MOUNTED, HEAT PUMP	[HP 01], HEAT PUMP	1"	MANUFACTURER'S RECOMMENDED CABLE		
C0117	[T 01], THERMOSTAT NO. 1	[FC 01], FAN COIL, WALL MOUNTED, HEAT PUMP	1"	MANUFACTURER'S RECOMMENDED CABLE		
C0118	[T 02], THERMOSTAT NO. 2, SUPPLY FAN	[SF 01], SUPPLY FAN	1"	MANUFACTURER'S RECOMMENDED CABLE		
C0119~	[CP 01], CONTROL PANEL, MAIN	[GO 01], MOTORIZED GATE OPERATOR NO. 1, ENTRANCE	3/4"	PULL WIRE		SPARE CONDUIT.
C0120~	[CP 01], CONTROL PANEL, MAIN	[GO 02], MOTORIZED GATE OPERATOR NO. 2, EXIT	3/4"	PULL WIRE		SPARE CONDUIT.
C0121	[MS 01], MOTOR STARTER, WELL PUMP S15R	JUNCTION BOX JC0121	3/4"	1X #12 AWG XHHW-2; 1X #12 AWG XHHW-2 N; 1X #12 AWG XHHW-2 G; 4X #14 AWG XHHW-2;		[SV 01], [L 01]
C0122	[MS 01], MOTOR STARTER, WELL PUMP S15R	JUNCTION BOX JC0122	3/4"	1X #12 AWG XHHW-2; 1X #12 AWG XHHW-2 N; 1X #12 AWG XHHW-2 G; 2X #14 AWG XHHW-2;		[SV 02], [L 02]
C0123	[MS 02], MOTOR STARTER, WELL PUMP S16	JUNCTION BOX JC0123	3/4"	1X #12 AWG XHHW-2; 1X #12 AWG XHHW-2 N; 1X #12 AWG XHHW-2 G; 4X #14 AWG XHHW-2;		[SV 03], [L 03]
C0124	[MS 02], MOTOR STARTER, WELL PUMP S16	JUNCTION BOX JC0124	3/4"	1X #12 AWG XHHW-2; 1X #12 AWG XHHW-2 N; 1X #12 AWG XHHW-2 G; 2X #14 AWG XHHW-2;		[SV 04], [L 04]
C0125	JUNCTION BOX JS0102	JUNCTION BOX JC0125	3/4"	4X #14 AWG XHHW-2; 1X #12 AWG XHHW-2 G		
C0125A	JUNCTION BOX JC0125	[ISW 09], INTRUSION SWITCH, [BLDG 02]	3/4"	MANUFACTURER'S CABLE		
C0126	JUNCTION BOX JS0102	[SD 07], SMOKE DETECTOR, [BLDG 02]	3/4"	4X #14 AWG XHHW-2; 1X #12 AWG XHHW-2 G		
C0127	[CP 01], CONTROL PANEL, MAIN	JUNCTION BOX JS0102	3/4"	4X #14 AWG XHHW-2; 1X #12 AWG XHHW-2 G		
C0128	IRRIGATION CONTROLLER, NW WALL OF TREATMENT ROOM	IRRIGATION MASTER/ZONE CONTROL VALVE BOXES	1"	MANUFACTURER'S RECOMMENDED CABLE		
C0129	[MS 01], MOTOR STARTER, WELL PUMP S15R	[SV 05] SOLENOID VALVE, pH	3/4"	1X #12 AWG XHHW-2; 1X #12 AWG XHHW-2 N; 1X #12 AWG XHHW-2 G		
C0130	[MS 02], MOTOR STARTER, WELL PUMP S16	[SV 06] SOLENOID VALVE, pH	3/4"	1X #12 AWG XHHW-2; 1X #12 AWG XHHW-2 N; 1X #12 AWG XHHW-2 G		

INSTRUMENTATION CABLE AND CONDUIT SCHEDULE

NUMBER	SOURCE	DESTINATION	SIZE	CONDUCTORS	E-1	NOTES
S0101	[CP 01], CONTROL PANEL, MAIN	JUNCTION BOX JS0101	3/4"	1X 2-C, 1-TP, #18 AWG, OS	* 3	
S0101A	JUNCTION BOX JS0101	[SLT 01], LEVEL TRANSMITTER, AQUIFER LEVEL, WELL S15R	3/4"	MANUFACTURER'S CABLE	* 3	
S0102	[CP 01], CONTROL PANEL, MAIN	JUNCTION BOX JS0102	3/4"	1X 2-C, 1-TP, #18 AWG, OS	* 3	
S0102A	JUNCTION BOX JS0102	JS0102A TERMINAL BOX FOR [SLT 02], LEVEL TRANSMITTER, AQUIFER LEVEL, WELL S16	3/4"	MANUFACTURER'S CABLE	* 3	
S0103	[CP 01], CONTROL PANEL, MAIN	JUNCTION BOX JS0103	1-1/2"	4X #14 AWG XHHW-2; 5X 2-C, 1-TP, #18 AWG, OS; 1X #12 AWG XHHW-2 G	* 3	1X TSP IS SPARE
S0103A	JUNCTION BOX JS0103	[MP 01], METERING PUMP NO. 1	3/4"	2X #14 AWG XHHW-2; 1X 2-C, 1-TP, #18 AWG, OS	* 3	
S0104	[CP 01], CONTROL PANEL, MAIN	JUNCTION BOX JS0104	2"	4X #14 AWG XHHW-2; 13X 2-C, 1-TP, #18 AWG, OS; 1X #12 AWG XHHW-2 G	* 3	1X TSP IS SPARE
S0104A	JUNCTION BOX JS0104	[CA 01] CHLORINE ANALYZER	1"	4X #14 AWG XHHW-2; 4X 2-C, 1-TP, #18 AWG, OS	* 3	
S0104B	JUNCTION BOX JS0104	[PH 01], PH ANALYZER TRANSMITTER NO. 1, WELL S15R	3/4"	2X 2-C, 1-TP, #18 AWG, OS	* 3	
S0105	[CP 01], CONTROL PANEL, MAIN	[PT 01], PRESSURE TRANSMITTER, SYSTEM DISCHARGE	3/4"	1X 2-C, 1-TP, #18 AWG, OS	* 3	
S0106	[CP 01], CONTROL PANEL, MAIN	[FIT 03], FLOW INDICATING TRANSMITTER, PACKAGE AERATION UNIT MAGNETIC FLOW METER NO. 3	3/4"	3X 2-C, 1-TP, #18 AWG, OS	* 3	
S0107	[CP 01], CONTROL PANEL, MAIN	JUNCTION BOX JS0107	3/4"	2X 2-C, 1-TP, #18 AWG, OS	* 3	TWO FLOATS, HI AND LO
S0107A	JUNCTION BOX JS0107	[LS 01], LEVEL SENSOR, PACKAGE AERATION UNIT	0'-0 3/4"	1X 2-C, 1-TP, #18 AWG, OS	* 3	
S0107B	JUNCTION BOX JS0107	[LS 02], LEVEL SENSOR, PACKAGE AERATION UNIT	3/4"	1X 2-C, 1-TP, #18 AWG, OS	* 3	
S0108	[CP 01], CONTROL PANEL, MAIN	[FIT 01], FLOW INDICATING TRANSMITTER, WELL PUMP S15R MAGNETIC FLOW METER NO. 1	3/4"	3X 2-C, 1-TP, #18 AWG, OS	* 3	
S0109	[CP 01], CONTROL PANEL, MAIN	[FIT 02], FLOW INDICATING TRANSMITTER, WELL PUMP S16 MAGNETIC FLOW METER NO. 2	3/4"	3X 2-C, 1-TP, #18 AWG, OS	* 3	
S0110	[CP 01], CONTROL PANEL, MAIN	[FIT 05], FLOW INDICATING TRANSMITTER, AIRFLOW METER	3/4"	3X 2-C, 1-TP, #18 AWG, OS	* 3	
S0111	[CP 01], CONTROL PANEL, MAIN	[ULS 01], ULTRASONIC LEVEL SENSOR NO. 1, HYPOCHLORITE STORAGE TANK	3/4"	1X 2-C, 1-TP, #18 AWG, OS	* 3	
S0112	[CP 01], CONTROL PANEL, MAIN	[CEP 01], COMMUNICATION EQUIPMENT POLE NO. 1	3"	MANUFACTURER'S RECOMMENDED CABLE	* 3	
S0113	[CP 01], CONTROL PANEL, MAIN	JUNCTION BOX JS0113	1"	4X 2-C, 1-TP, #18 AWG, OS	* 3	
S0114	[CP 01], CONTROL PANEL, MAIN	JUNCTION BOX JS0114	3/4"	2X 2-C, 1-TP, #18 AWG, OS	* 3	
S0114A	JUNCTION BOX JS0114	[PG 01], PRESSURE GAUGE	3/4"	1X 2-C, 1-TP, #18 AWG, OS	* 3	
S0114B	JUNCTION BOX JS0114	[DP 01], PRESSURE	3/4"	1X 2-C, 1-TP, #18 AWG, OS	* 3	
S0115	[CP 01], CONTROL PANEL, MAIN	[SLT 03], LEVEL TRANSMITTER, AERATION TANK LEVEL	3/4"	1X 2-C, 1-TP, #18 AWG, OS	* 3	
S0116	[CP 01], CONTROL PANEL, MAIN	[RTD 01]	3/4"	1X 2-C, 1-TP, #18 AWG, OS	* 3	
S0117	JUNCTION BOX JS0113	[PH 02], PH ANALYZER TRANSMITTER	3/4"	2X 2-C, 1-TP, #18 AWG, OS	* 3	
S0117A	[PH 02], PH ANALYZER TRANSMITTER	PH SENSOR, WELL S16	3/4"	2X 2-C, 1-TP, #18 AWG, OS	* 3	
S0118	JUNCTION BOX JS0113	[PH 03], PH ANALYZER TRANSMITTER	3/4"	2X 2-C, 1-TP, #18 AWG, OS	* 3	

CABLES AND CONDUITS:

1. REFERENCE RACEWAY SPECIFICATIONS AND OUTDOOR INSTALLATION NOTES FOR CONDUIT COMPOSITION AND COATING.
2. REFERENCE CONDUCTOR SPECIFICATIONS FOR INSTRUMENTATION, COMMUNICATION, AND OTHER SPECIAL CABLES AND CONDUCTORS.
3. CONDUIT TAGS ON PLAN SHEETS WITH AN "*" (ASTERISK) REFERS TO A SPARE CONDUIT.

Gray & Osborne, Inc.
CONSULTING ENGINEERS
1130 RAINIER AVENUE SOUTH, SUITE 300
SEATTLE, WASHINGTON 98144

DATE: SEPT 2022 | DRAWN: PEB | CHECKED: PAM | APPROVED: MBS

No.	REVISION	DATE	APPD

MICHAEL B. SWEENEY — STATE OF WASHINGTON — 22304 — REGISTERED PROFESSIONAL ENGINEER — 9-26-22

CITY OF LACEY
THURSTON COUNTY WASHINGTON
BEACHCREST WELLFIELD pH IMPROVEMENTS
CABLE AND CONDUIT SCHEDULES

SHEET: EC-2
SHEET: 77 of 81
JOB NO.: 19520
DWG:E_CCS

L:\LACEY\19520 pH Predesign and S17 Facilities Design\PLANSET\E-Sheets\E_CCS.dwg, 9/26/2022 1:30 PM, LIZ BATES

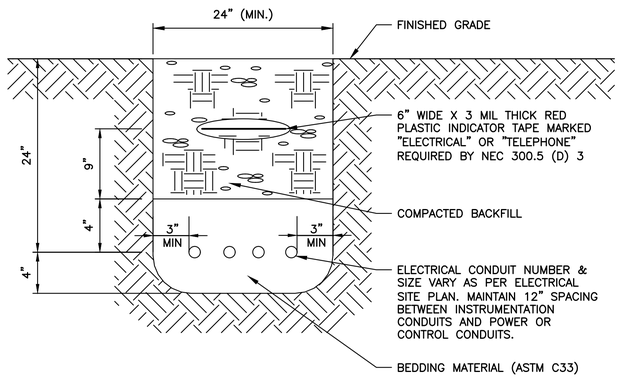

NOTES:

1. SPACING BETWEEN CONDUITS AND OTHER UTILITIES SHALL BE IN COMPLIANCE WITH UTILITY REQUIREMENTS, OR 24 INCHES MINIMUM, WHICHEVER IS GREATER.

1 TYP — ELECTRICAL TRENCHING DETAIL

NOT TO SCALE

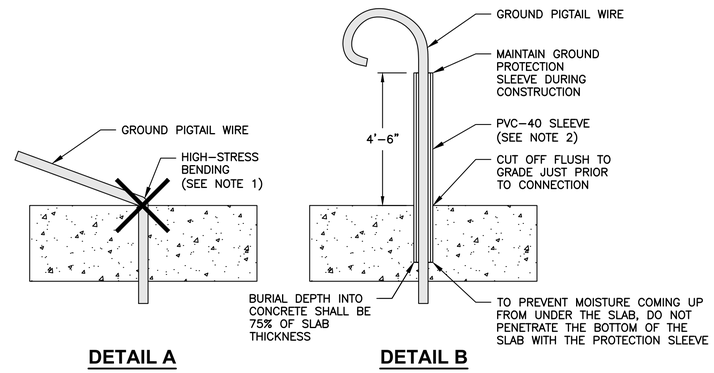

NOTES:

1. BARE COPPER GROUND WIRES SHALL NOT PENETRATE DIRECTLY OUT OF CONCRETE FLOORS. CONSTRUCTION ACTIVITIES CAN CAUSE TIGHT WIRE BENDING AND POSSIBLE GROUND WIRE DEGRADATION. DETAIL "A" IS NOT ACCEPTABLE.
2. PROTECT THE GROUND PIGTAIL DURING CONSTRUCTION WITH A PVC-40 SLEEVE INSTALLED AS DESCRIBED IN DETAIL "B".
3. JUST PRIOR TO SETTING EQUIPMENT OVER, OR MAKING THE FINAL CONNECTION OF THE GROUND WIRE, CUT OFF THE SLEEVE FLUSH TO THE FLOOR TAKING CARE NOT TO CUT INTO THE GROUND WIRE.

2 TYP — GROUND PIGTAIL CONSTRUCTION PROTECTION SLEEVE DETAIL

NOT TO SCALE

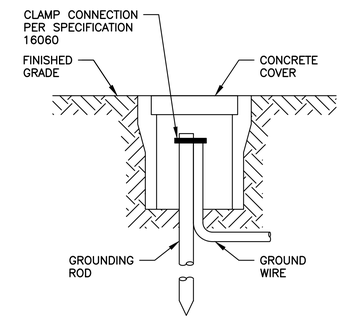

NOTES:

1. GROUND ROD BOX SHALL BE FOGTITE GROUND ROD BOX WITH ROAD RATING EQUAL TO THE DEVICE OR STRUCTURE IT SUPPORTS (H20 MINIMUM).

3 TYP — GROUND ROD BOX DETAIL

NOT TO SCALE

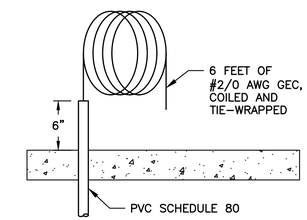

NOTES:

1. BARE COPPER GROUND WIRES TO FUTURE EQUIPMENT [01 SDS 01A] AND [01 MCC 01A] SHALL BE CONNECTED FROM THE GROUND GRID TO 6-FOOT COILS THROUGH 6-INCH CONDUIT STUB-UPS ALIGNED WITH FUTURE EQUIPMENT.
2. TIE-WRAP THE COILS AND NEATLY SET THEM NEAR THE WALL.

4 TYP — GEC INSTALLATIONS FOR FUTURE EQUIPMENT

NOT TO SCALE

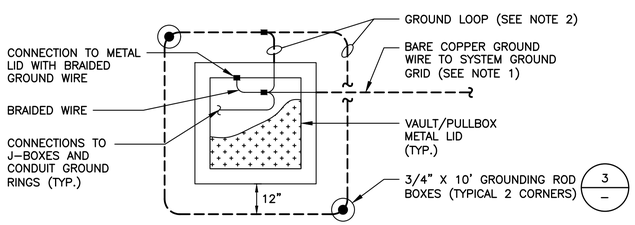

NOTES:

1. PROVIDE AND SIZE GROUND CONDUCTOR FROM SYSTEM GROUND DISTRIBUTION PER – / E-6 .
2. PROVIDE BARE COPPER GROUND LOOP AROUND THE VAULT/PULLBOX 12-INCHES OUT AND 12-INCHES DEEP.
3. GROUND ALL METAL COMPONENTS AS PER "VAULT AND PULLBOX GROUNDING" IN SPECIFICATION 16060.
4. ALL GROUND CONDUCTORS SHALL BE STRANDED WITH THE EXCEPTION OF THE FLEXIBLE BRAIDED GROUND CONDUCTOR TO THE METAL HATCH LIDS.

5 TYP — METAL LID GROUNDING DETAIL

NOT TO SCALE

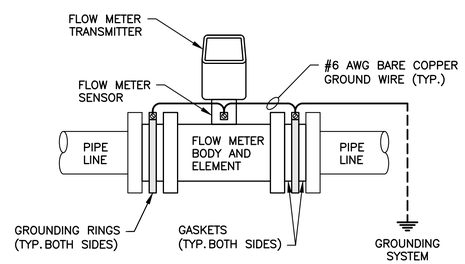

NOTES:

1. CONTRACTOR SHALL PROVIDE AND INSTALL INSULATING GASKETS AND MANUFACTURER'S GROUND RINGS TO EACH SIDE OF THE FLOW METER BODY. THE GROUND RINGS AND FLOW METER SENSOR SHALL BE TIED TO THE SYSTEM GROUND WITH A #6 AWG GROUNDING WIRE. CONNECT AS SHOWN OR PER MANUFACTURER'S REQUIREMENTS.

6 TYP — FLOW METER GROUNDING DETAIL

NOT TO SCALE

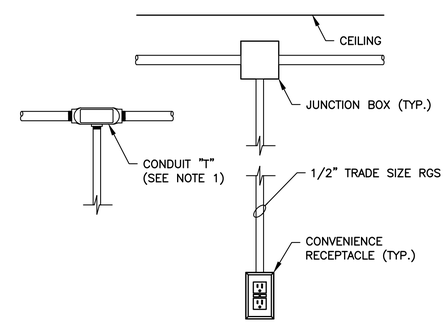

NOTES:

1. WHERE SPLICING FOR CONVENIENCE RECEPTACLE IS PERFORMED IN A CONDUIT BODY THE CONDUIT BODY SHALL BE SIZED PER THE NEC AND HAVE ITS VOLUME MARKED BY THE MANUFACTURER COMPLIANT TO NEC 314.16(C).

7 TYP — JUNCTION BOX AND RECEPTACLE DETAIL

NOT TO SCALE

0 1" 2"

TWO INCHES AT FULL SCALE. IF NOT, SCALE ACCORDINGLY

Gray & Osborne, Inc.
CONSULTING ENGINEERS
1130 RAINIER AVENUE SOUTH, SUITE 300
SEATTLE, WASHINGTON 98144

DATE: SEPT 2022	
DRAWN:	PEB
CHECKED:	PAM
APPROVED:	MBS

No.	REVISION	DATE	APPD

MICHAEL B. STEENEY — STATE OF WASHINGTON — REGISTERED PROFESSIONAL ENGINEER — 22200 — 9-26-22

CITY OF LACEY
THURSTON COUNTY WASHINGTON
BEACHCREST WELLFIELD pH IMPROVEMENTS
ELECTRICAL DETAILS

SHEET: ED-1
SHEET: 78 of 81
JOB NO.: 19520
DWG:E_DET

L:\LACEY\19520 pH Predesign and S17 Facilities Design\PLANSET\E-Sheets\E_DET.dwg, 9/26/2022 1:30 PM, LIZ BATES

1 TYP **NOT USED**
NOT TO SCALE

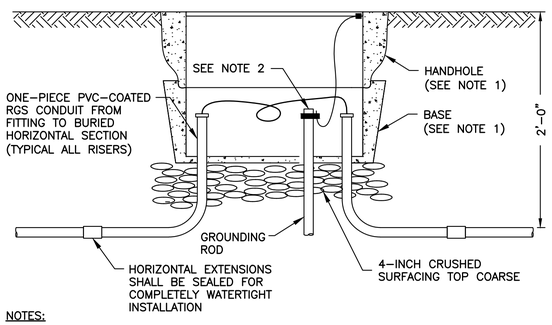

NOTES:

1. FOGTITE INC. #2SL HANDHOLE COMPLETE WITH GALVANIZED STEEL LID, RATED H-20 LOADING, WITH POSITIVE LOCK, AND WITH #2SL BASE. FURNISH AND INSTALL PULL BOX ASSEMBLY ON TOP OF 4-INCH THICK CRUSHED SURFACING TOP COURSE. PROVIDE LID WITH "POWER" LEGEND.
2. PROVIDE GROUND ROD AND BRAID INSIDE HANDHOLE WITH METAL PARTS OR METAL LID. REFERENCE SPECIFICATION 16060.

2 TYP **HANDHOLE DETAIL**
NOT TO SCALE

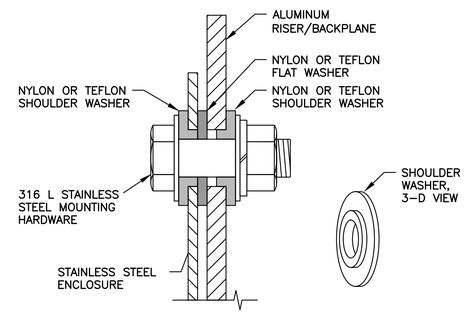

NOTES:

1. PROVIDE TEFLON OR NYLON SHOULDER WASHERS BETWEEN STAINLESS STEEL MOUNTING HARDWARE AND STRUCTURES/ENCLOSURES. SEPARATE STAINLESS STEEL ENCLOSURES FROM ALUMINUM RISERS OR BACKPLANES WITH A FLAT TEFLON OR NYLON WASHER AS SHOWN.

3 TYP **SHOULDER WASHER MOUNTING DETAIL**
NOT TO SCALE

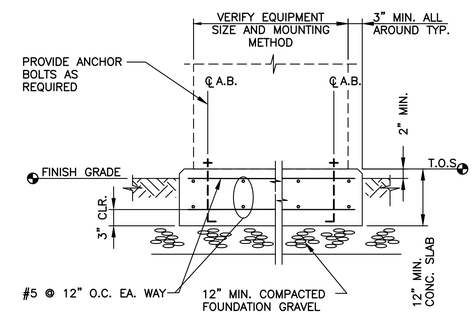

4 TYP **EXTERIOR EQUIPMENT PANEL 12" CONCRETE PAD DETAIL**
SCALE: 3/4" = 1'-0"

0 1" 2"
TWO INCHES AT FULL SCALE. IF NOT, SCALE ACCORDINGLY

Gray & Osborne, Inc.
CONSULTING ENGINEERS
1130 RAINIER AVENUE SOUTH, SUITE 300
SEATTLE, WASHINGTON 98144

DATE: SEPT 2022	
DRAWN: PEB	
CHECKED: PAM	
APPROVED: MBS	

No.	REVISION	DATE	APPD

MICHAEL B. SWEENEY
STATE OF WASHINGTON
22259
REGISTERED PROFESSIONAL ENGINEER
8-26-22

CITY OF LACEY
THURSTON COUNTY WASHINGTON
BEACHCREST WELLFIELD pH IMPROVEMENTS
ELECTRICAL DETAILS

SHEET: ED-2
SHEET: 79 of 81
JOB NO.: 19520
DWG:E_DET

L:\LACEY\19520 pH Predesign and S17 Facilities Design\PLANSET\E-Sheets\E_DET.dwg, 9/26/2022 1:31 PM, LIZ BATES

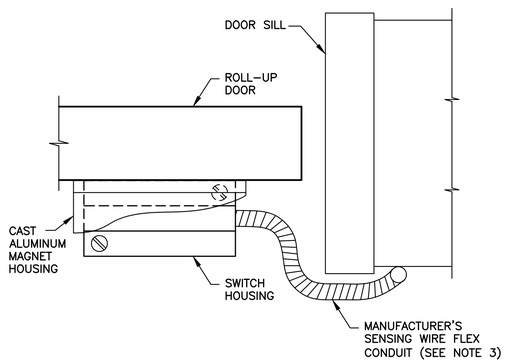

PLAN

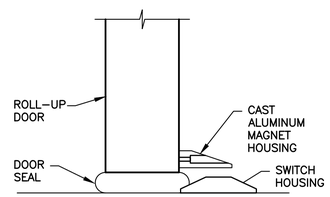

ELEVATION

NOTES:

1. ROLL-UP DOOR INTRUSION SWITCH SHALL BE MAGNETIC TYPE, FLOOR-MOUNTED, WITH CAST ALUMINUM MAGNET HOUSING SECURED TO THE DOOR, GE SECURITY 2200 SERIES OR EQUAL.
2. CONTRACTOR SHALL SECURE SWITCH HOUSING TO FLOOR USING xxxxx STAINLESS STEEL SCREWS.
3. PROVIDE J-BOX TO TERMINATE MANUFACTURER'S SENSING WIRES.

1 / TYP **ROLL-UP DOOR INTRUSION SWITCH DETAIL**
NOT TO SCALE

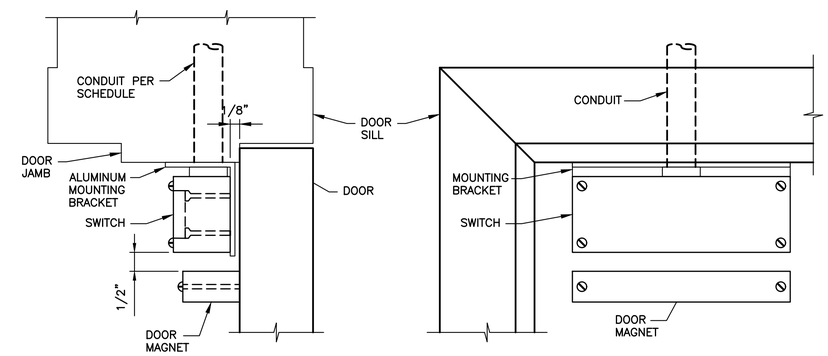

PLAN **ELEVATION**

NOTES:

1. DOOR INTRUSION SWITCH SHALL BE MAGNETIC TYPE, TRIPLE BIASED, TAMPER PROOF, SENTROL 2800T SERIES OR EQUAL.
2. CONTRACTOR SHALL FABRICATE ALUMINUM MOUNTING BRACKET FOR SWITCH.

2 / TYP **PEDESTRIAN DOOR INTRUSION SWITCH DETAIL**
NOT TO SCALE

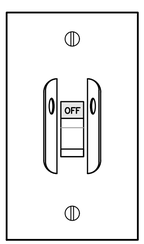

NOTES:

1. ALL HVAC POWER DEVICES SHALL BE CONNECTED THROUGH A SAFETY DISCONNECT SWITCH WITH A COVERPLATE THAT IS LOCKABLE IN THE OPEN POSITION.
2. SAFETY DISCONNECT SWITCHES THAT ARE WALL-MOUNTED SHALL BE RECESSED INTO THE WALL IN STANDARD DEVICE BOXES.
3. SAFETY DISCONNECT SWITCHES TO OUTDOOR EQUIPMENT OR EQUIPMENT MOUNTED ABOVE THE CEILING OR EQUIPMENT MOUNTED WITHIN SUSPENDED CEILINGS SHALL BE SURFACE MOUNTED IN CAST ALUMINUM DEVICE BOXES.
4. ALL HVAC SAFETY DISCONNECT SWITCHES SHALL BE TOGGLE-TYPE, 600 VAC, 3 POLE, INDUSTRIAL GRADE, NON-GROUNDING, SIDE WIRED;

   20A: LEVITON 1222-2E OR EQUIVALENT (2 POLE, 240 VAC)
   30A: LEVITON MS303-DS OR EXACT EQUIVALENT
   40A: LEVITON MS403-DS OR EXACT EQUIVALENT
5. PROVIDE WEATHERPROOF COVER FOR OUTDOOR SWITCHES.

3 / TYP **LOCKABLE SAFETY DISCONNECT SWITCH DETAIL**
NOT TO SCALE

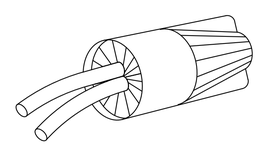

NOTES:

1. PROVIDE WATER-TIGHT CONNECTOR FOR CONTROL AND INSTRUMENTATION CONDUCTOR SPLICING. INCLUDE A STRAIN RELIEF ON CONTROL CONDUCTOR SPLICE CONNECTORS. REFERENCE SPECIFICATION 16120 FOR SPECIFIC REQUIREMENTS.
2. SUBMERGE THE SPLICE AND TEST FOR WATER-TIGHT INTEGRITY.

4 / TYP **CONTROL AND INSTRUMENTATION CONDUCTOR WATER-TIGHT SPLICE DETAIL**
NOT TO SCALE

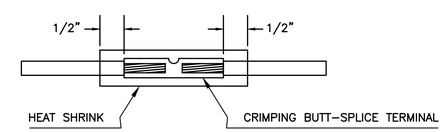

NOTES:

1. TRIMMED PORTION OF WIRES SHALL PENETRATE TO THE FULL DEPTH SPLICE TERMINAL AND BE CRIMPED PER MANUFACTURER'S RECOMMENDATIONS.
2. HEAT SHRINK OVERLAY SHALL BE 1/2" MINIMUM, THEN WRAPPED WITH ELECTRICAL TAPE TO PROVIDE INSULATION LEVEL TO CODE.

5 / TYP **BUTT-SPLICE TERMINATING DETAIL**
NOT TO SCALE

0 1" 2"
TWO INCHES AT FULL SCALE.
IF NOT, SCALE ACCORDINGLY

Gray & Osborne, Inc.
CONSULTING ENGINEERS
1130 RAINIER AVENUE SOUTH, SUITE 300
SEATTLE, WASHINGTON 98144

DATE: SEPT 2022	
DRAWN:	PEB
CHECKED:	PAM
APPROVED:	MBS

No.	REVISION	DATE	APPD

MICHAEL B. SWEENEY
STATE OF WASHINGTON
PROFESSIONAL ENGINEER
9-26-22

CITY OF LACEY
THURSTON COUNTY WASHINGTON
BEACHCREST WELLFIELD pH IMPROVEMENTS
ELECTRICAL DETAILS

SHEET: **ED-3**
SHEET: **80 of 81**
JOB NO.: 19520
DWG:E_DET

L:\LACEY\19520 pH Predesign and S17 Facilities Design\PLANSET\E-Sheets\E_DET.dwg, 9/26/2022 1:31 PM, LIZ BATES

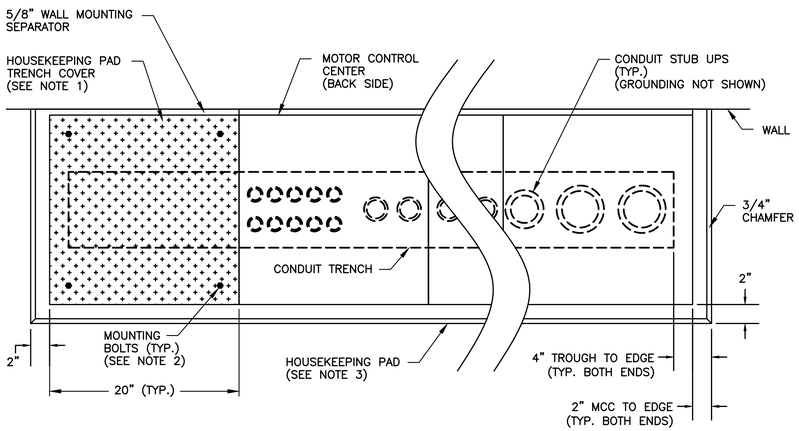

NOTES:

1. ON HOUSEKEEPING PADS THAT ARE EXTENDED FOR FUTURE MCC COLUMNS, THE EXPOSED PORTION OF THE HOUSEKEEPING PAD SHALL BE COVERED WITH A 1/4" ALUMINUM OR GALVANIZED STEEL DIAMOND PLATE. IF STEEL IS USED, THEN THE CONTRACTOR SHALL PAINT THE STEEL PLATE TO MATCH THE COLOR OF THE MCC. GROUND THE DIAMOND PLATE COVER AS PER NEC.
2. BOLT THE PLATE TO THE HOUSEKEEPING PAD WITH 4 X 3/8-INCH STAINLESS STEEL LAG BOLTS MINIMUM.
3. FOR CONCRETE DIMENSIONS AND REINFORCEMENT DETAILS, REFERENCE STRUCTURAL SHEETS.

1 / TYP **OVERHEAD VIEW TYPICAL MCC HOUSEKEEPING PAD PLAN**
NOT TO SCALE

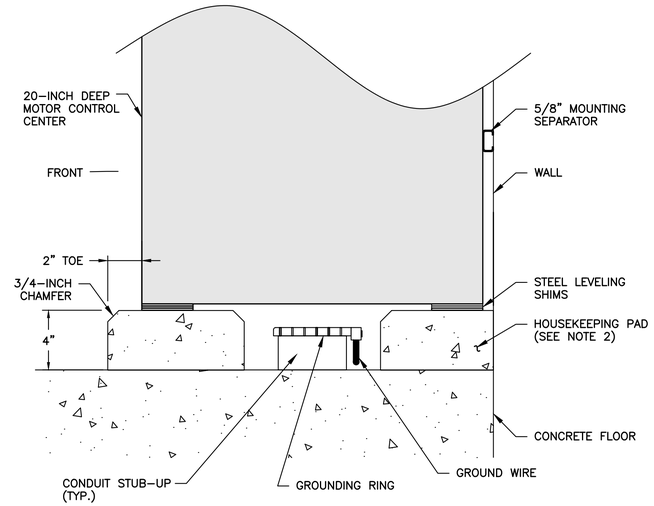

NOTES:

1. FOR MCCS DEEPER THAN 20 INCHES, EXTEND THE WIDTH OF THE FRONT CURB SUCH THAT THE 2-INCH TOE IS MAINTAINED. ALIGN THE MOUNTING CHANNEL TO THE EDGE OF THE MCC AS SHOWN.
2. FOR CONCRETE DIMENSIONS AND REINFORCEMENT DETAILS, REFERENCE STRUCTURAL SHEETS.

2 / TYP **TYPICAL MCC HOUSEKEEPING PAD DETAIL**
NOT TO SCALE

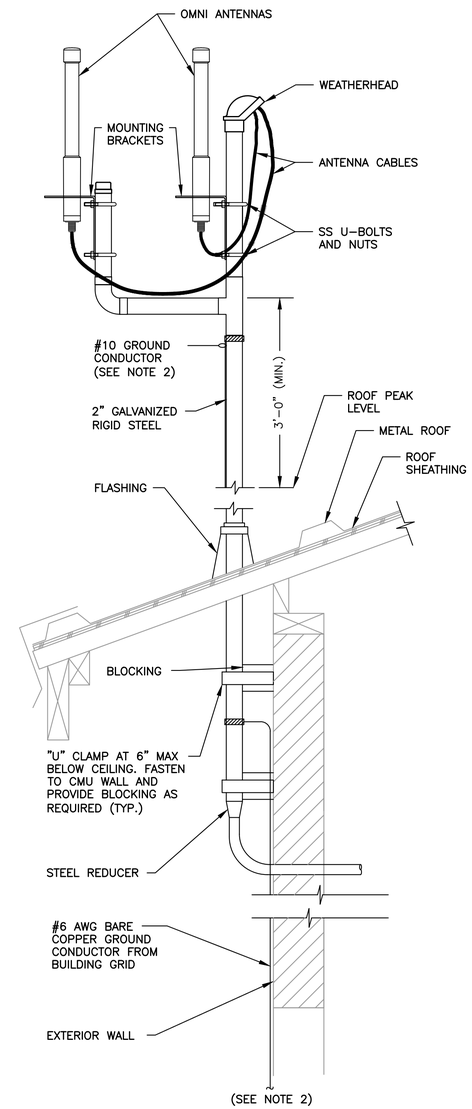

NOTES:

1. PROVIDE WEATHER SEAL AT ANTENNA / ANTENNA FEED LINE CONNECTION.
2. CONNECT GROUND CONDUCTOR DIRECTLY TO GROUND ROD. TIE CABLE GROUND CONDUCTOR TO MAST EVERY 2'-0". CONNECT TO GROUNDING SYSTEM AS SHOWN ON GROUNDING ONE LINE DIAGRAM.
3. THE CONTRACTOR SHALL PROVIDE AND INSTALL A NEW MAST AND INSTALL CABLE, ANTENNAS AND MOUNTING HARDWARE PER MANUFACTURER'S RECOMMENDATIONS. THE INTEGRATOR SHALL CONNECT THE CABLES AND DIRECT THE ANTENNA MAST ROTATION IF REQUIRED.

3 / TYP **ANTENNA MOUNTING DETAIL**
NOT TO SCALE

0 1" 2"
TWO INCHES AT FULL SCALE. IF NOT, SCALE ACCORDINGLY

Gray & Osborne, Inc.
CONSULTING ENGINEERS
1130 RAINIER AVENUE SOUTH, SUITE 300
SEATTLE, WASHINGTON 98144

DATE: SEPT 2022 | DRAWN: PEB | CHECKED: PAM | APPROVED: MBS

No.	REVISION	DATE	APPD

MICHAEL B. SWEENEY — STATE OF WASHINGTON — 52525 — REGISTERED PROFESSIONAL ENGINEER — 9-26-22

CITY OF LACEY
THURSTON COUNTY WASHINGTON
BEACHCREST WELLFIELD pH IMPROVEMENTS
ELECTRICAL DETAILS

SHEET: ED-4
SHEET: 81 of 81
JOB NO.: 19520
DWG:E_DET

L:\LACEY\19520 pH Predesign and S17 Facilities Design\PLANSET\E-Sheets\E_DET.dwg, 9/26/2022 1:31 PM, LIZ BATES