Shaping our community together

CITY OF LACEY

420 COLLEGE ST SE
LACEY, WA 98503

ADDENDUM NO. 1

TO THE PLANS, SPECIFICATIONS, PROPOSAL AND CONTRACT FOR THE CITY OF LACEY

BEACHCREST WELLFIELD IMPROVEMENTS

LACEY CONTRACT NO. PW 2019-29

TO ALL PLAN HOLDERS:

You are hereby notified of the following changes, revisions, deletions, additions, corrections and/or clarifications to the plans, specifications, and contract documents for the *BEACHCREST WELLFIELD PH IMPROVEMENTS* project. This addendum is made part of these contract documents as though it was originally included in the Contract. The Contractor shall note the location of the Addenda Receipt Acknowledgement on Page B-3 of the Contract Proposal.

Issued this 6th day of December 2022.

I. ADDITIONS, MODIFICATIONS, AND/OR DELETIONS TO THE PLANS

ITEM NO. 1:
Sheet S-7

1) *The revisions include the inclusion of roof anchors on Sheet S-7.*

   Delete Sheet S-7 and replace it with the new page as attached.

ITEM NO. 2:
Sheet S-8

2) *The revisions include modifications to Section D on Sheet S-8.*

   Delete Sheet S-8 and replace it with the new page as attached.

II. ADDITIONS, MODIFICATIONS, AND/OR DELETIONS TO THE SPECIFICATIONS

ITEM NO. 1:
Technical Specifications – Part E, Page 07410-1, Section 07410-1.1

1) *The revisions include modifications to Technical Specifications – Part E, Section 07410 – 1.1 SCOPE*

REVISE the first paragraph in this section as shown below (added text is italicized):

"The work specified in the Section includes, but is not necessarily limited to, furnishing and installing of all metal roofing, siding, metal fascia, gutters, downspouts, *foundation insulation counterflashing*, and accessories as indicated on the Plans and specified herein."

Scott Egger, P.E.
Director of Public Works

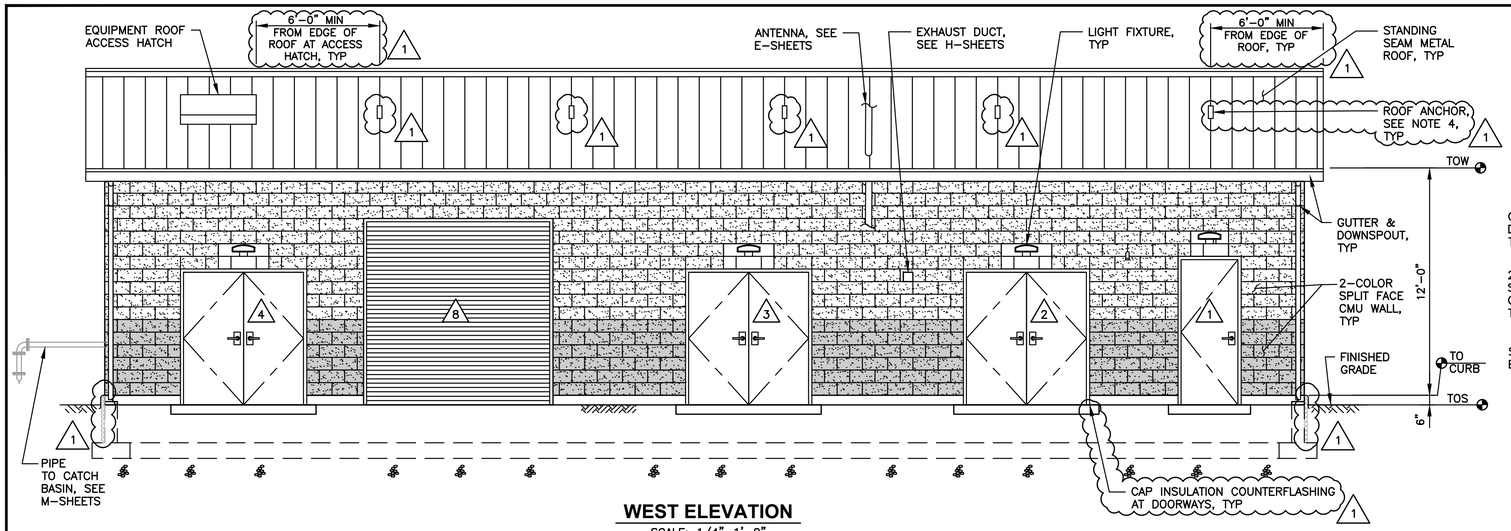

WEST ELEVATION

SCALE: 1/4"=1'-0"

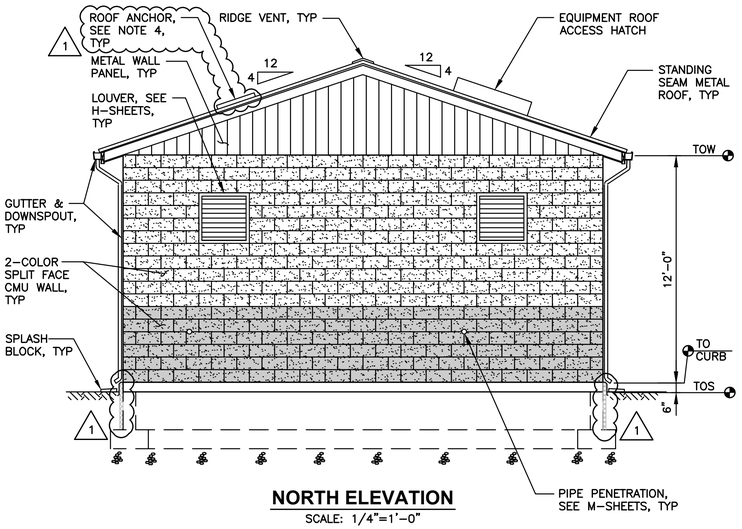

NORTH ELEVATION

SCALE: 1/4"=1'-0"

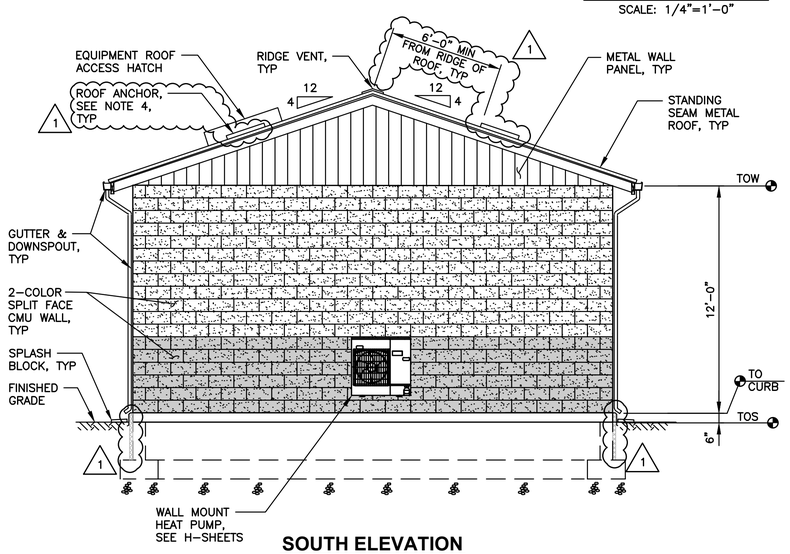

SOUTH ELEVATION

SCALE: 1/4"=1'-0"

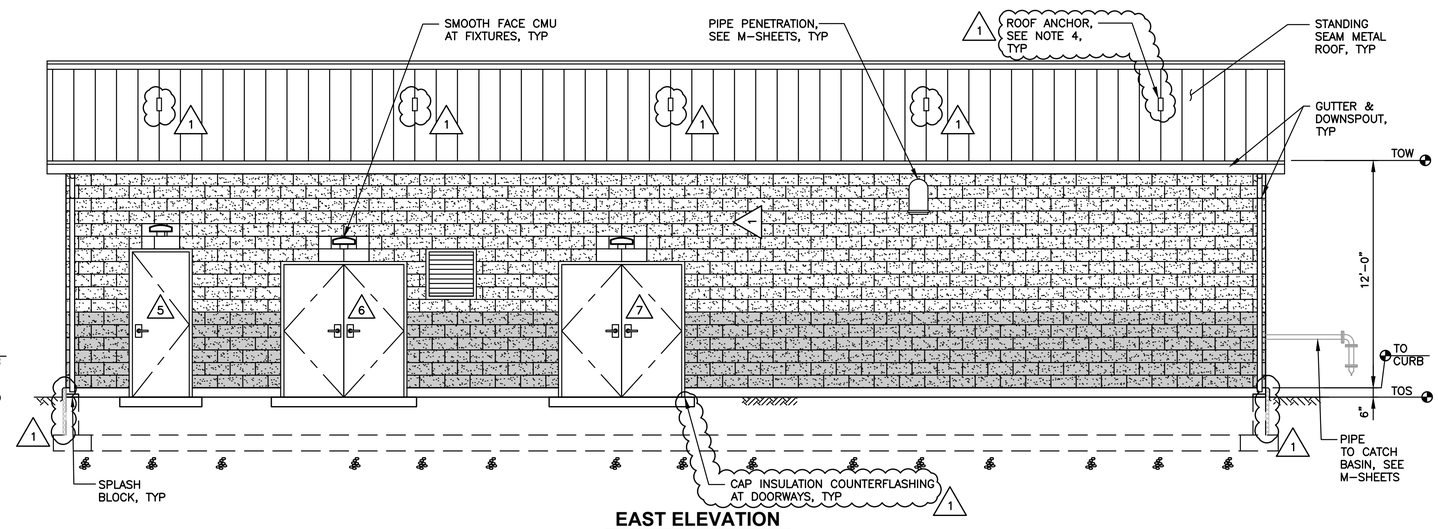

EAST ELEVATION

SCALE: 1/4"=1'-0"

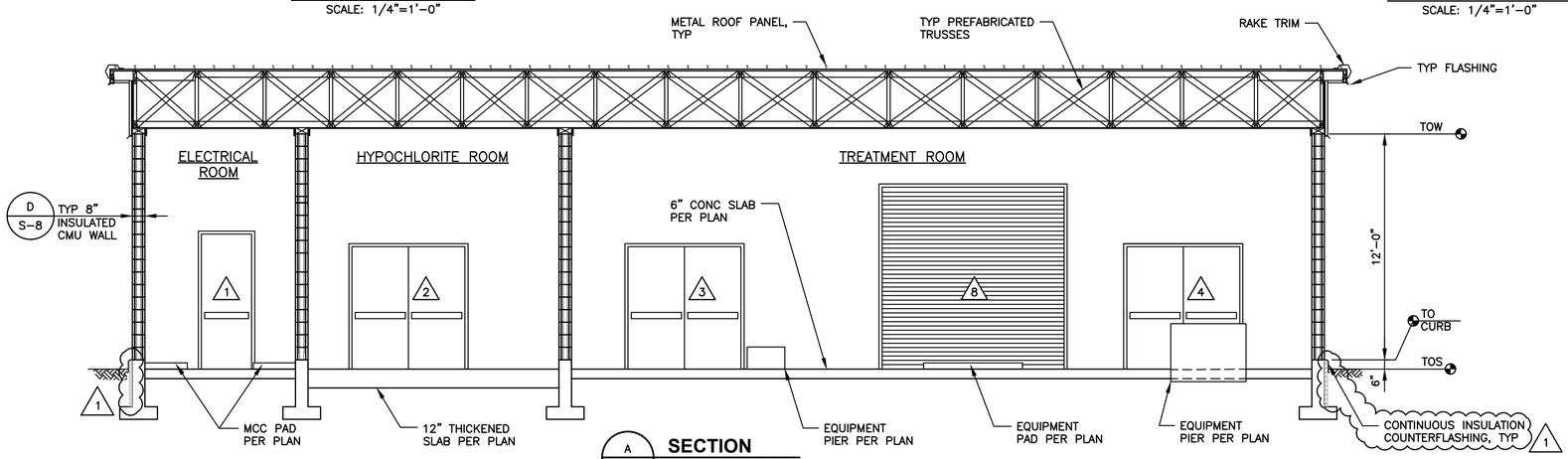

A S-5 **SECTION**

SCALE: 1/4"=1'-0"

NOTES:

1. PIPING NOT SHOWN FOR CLARITY, SEE M-SHEETS.
2. SUPPORTS AND BRACES FOR MECHANICAL PIPES MAY NOT BE ATTACHED TO ROOF STRUCTURE. THEY SHALL BE ATTACHED TO CMU WALL OR CONCRETE FLOOR.
3. NOT ALL PENETRATIONS MAY BE SHOWN. CONTRACTOR SHALL VERIFY NUMBER, SIZE AND LOCATIONS OF ALL OPENINGS WITH MECHANICAL, ELECTRICAL, AND HVAC DRAWINGS.
4. ROOF ANCHOR SHALL BE FALL PROTECTION DISTRIBUTORS SSRA1 STANDING SEAM ROOF ANCHOR, OR EQUAL. LOCATE AND INSTALL PER MANUFACTURER'S RECOMMENDATIONS. PROVIDE 10 ROOF ANCHORS TOTAL.

0 1" 2"

TWO INCHES AT FULL SCALE. IF NOT, SCALE ACCORDINGLY

Gray & Osborne, Inc.
CONSULTING ENGINEERS
1130 RAINIER AVENUE SOUTH, SUITE 300
SEATTLE, WASHINGTON 98144

DATE: NOV 2022	
DRAWN: RAH	
CHECKED: ZK	
APPROVED: MJB	

No.	REVISION	DATE	APPD
1	ADDENDUM NO. 1	12/22	MJB

ANTHONY J. BASDEKIS, STATE OF WASHINGTON, 46334, REGISTERED PROFESSIONAL ENGINEER, 12/5/2022

CITY OF LACEY
THURSTON COUNTY WASHINGTON
BEACHCREST WELLFIELD pH IMPROVEMENTS
ELEVATIONS

SHEET: S-7

SHEET: 42 of 81

JOB NO.: 19520

DWG:S_BLDG_PLNS

L:\LACEY\19520 pH Predesign and S17 Facilities Design\PLANSET\S-Sheets\S_BLDG_PLNS.dwg, 12/5/2022 11:29 AM, RUSSELL HORITA

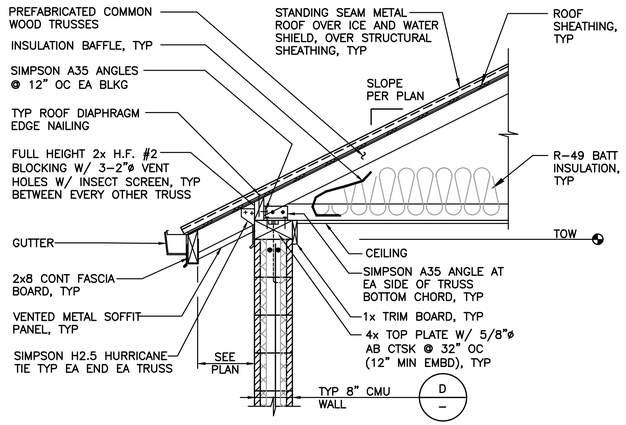

A / S-6 **SECTION**
SCALE: 3/4"=1'-0"

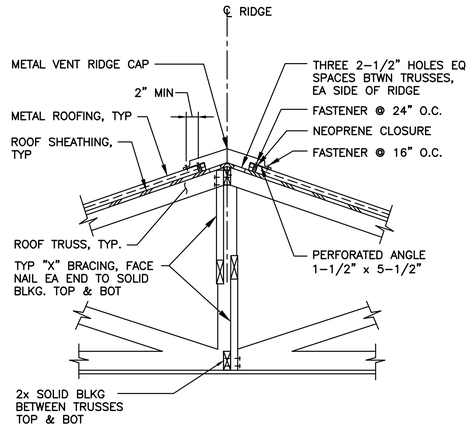

B / S-6 **SECTION**
SCALE: 3/4"=1'-0"

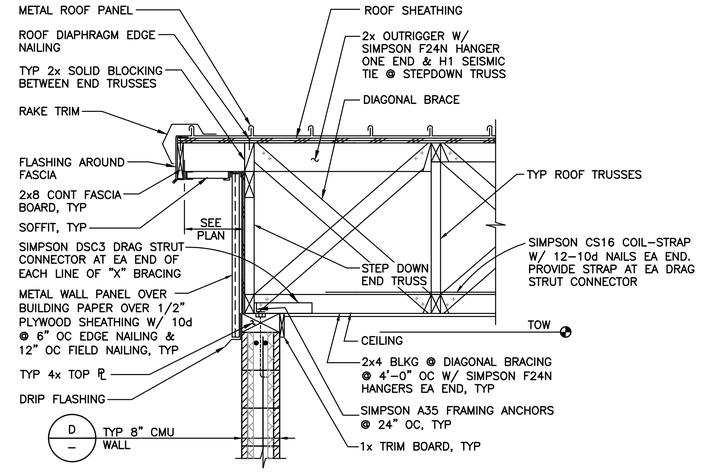

C / S-6 **SECTION**
SCALE: 3/4"=1'-0"

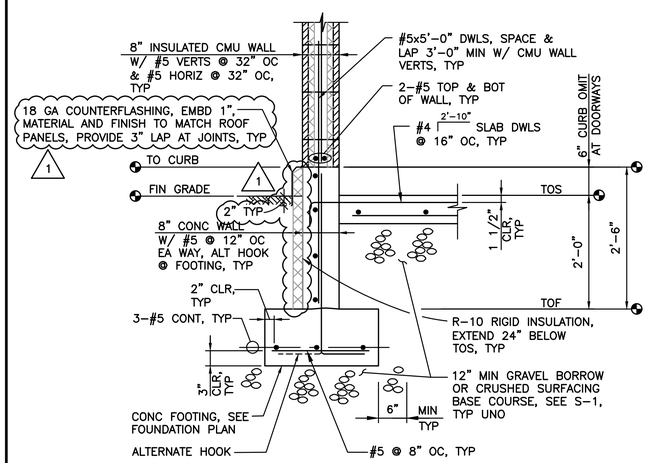

D / S-5 **SECTION**
SCALE: 3/4"=1'-0"

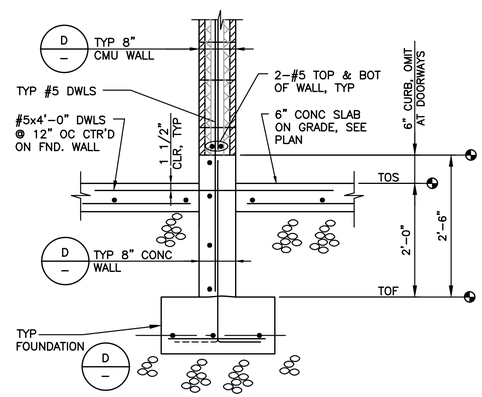

E / S-5 **SECTION**
SCALE: 3/4"=1'-0"

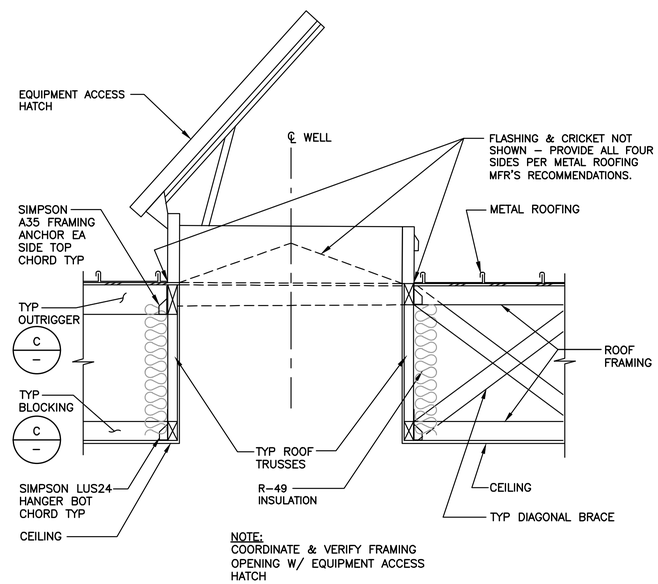

H / S-6 **SECTION**
SCALE: 3/4"=1'-0"

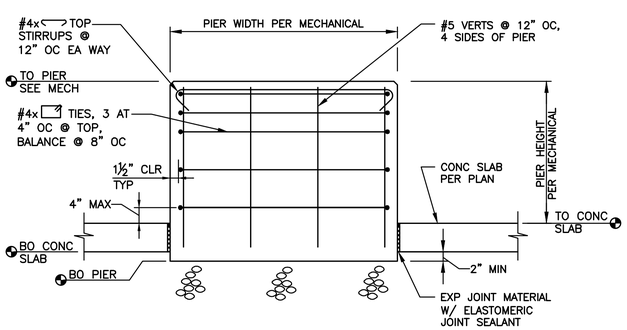

F / S-5 **SECTION**
SCALE: 3/4"=1'-0"

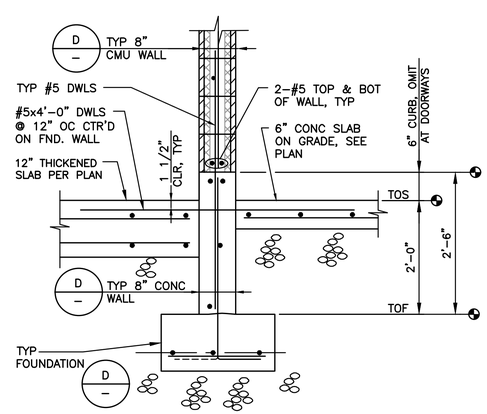

G / S-5 **SECTION**
SCALE: 3/4"=1'-0"

0 1" 2"
TWO INCHES AT FULL SCALE. IF NOT, SCALE ACCORDINGLY

Gray & Osborne, Inc.
CONSULTING ENGINEERS
1130 RAINIER AVENUE SOUTH, SUITE 300
SEATTLE, WASHINGTON 98144

DATE: NOV 2022	
DRAWN: RAH	
CHECKED: ZK	
APPROVED: MJB	

No.	REVISION	DATE	APPD
1	ADDENDUM NO. 1	12/22	MJB

MATTHEW J. BASSEY, STATE OF WASHINGTON, REGISTERED PROFESSIONAL ENGINEER, 12/5/2022

CITY OF LACEY
THURSTON COUNTY WASHINGTON
BEACHCREST WELLFIELD pH IMPROVEMENTS
DETAILS

SHEET: S-8
SHEET: 43 of 81
JOB NO.: 19520
DWG:S_BLDG_PLNS

L:\LACEY\19520 pH Predesign and S17 Facilities Design\PLANSET\S-Sheets\S_BLDG_PLNS.dwg, 12/5/2022 11:29 AM, RUSSELL HORITA