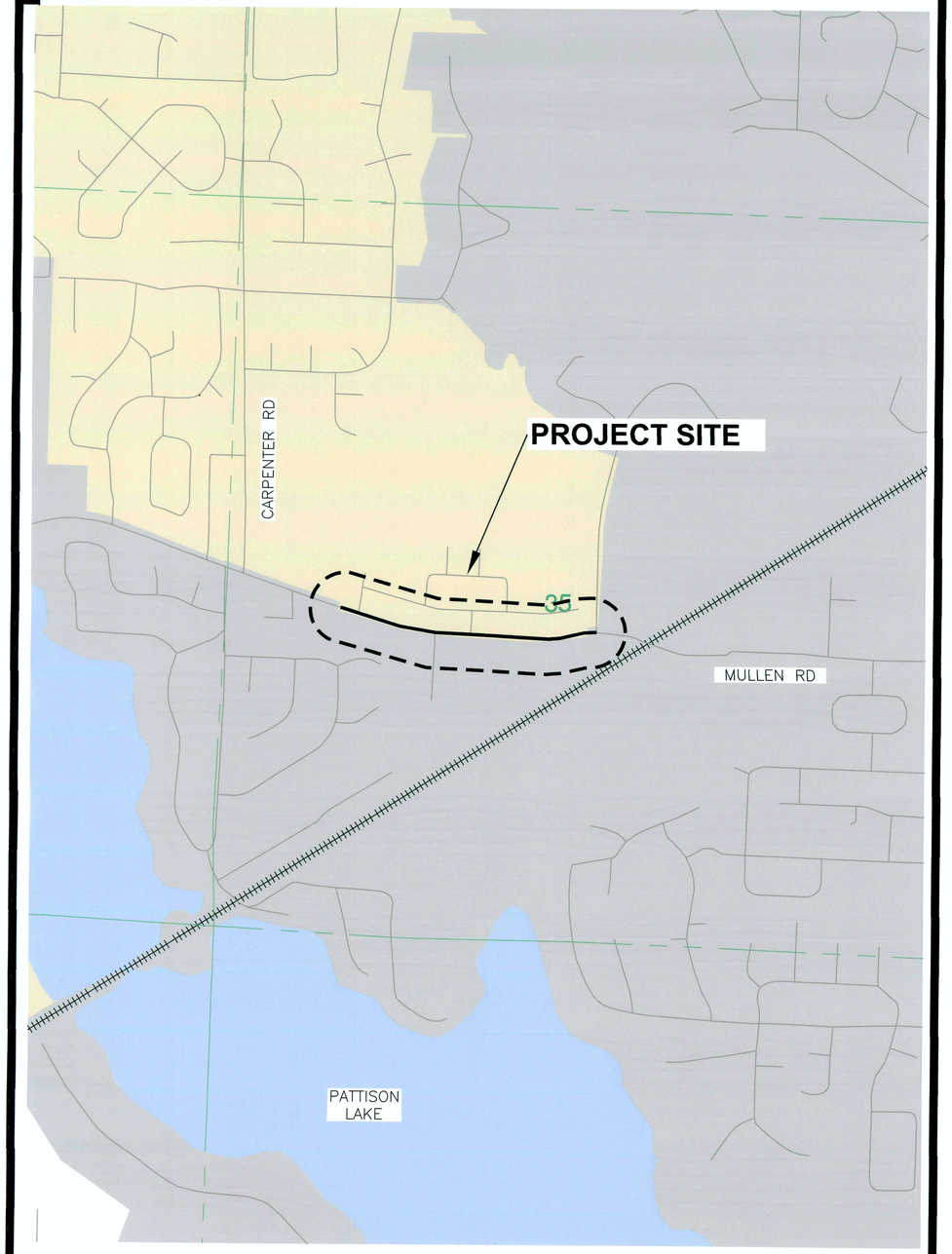

N.

DATUM

LACEY

VICINITY MAP
CITY OF LACEY, WASHINGTON
SCALE : 1" = 500'

0 250 500

LACEY CITY LIMITS
OLYMPIA CITY LIMITS
URBAN GROWTH AREA

2023 MULLEN RD SEWER IMPROVEMENTS

LACEY CONTRACT # PW 2023-06
SECTION 35, T18N, R1W, W.M.

LACEY CITY OFFICIALS

MAYOR: Andy Ryder

DEPUTY MAYOR: Malcolm Miller

CITY COUNCIL: Lenny Greenstein
Michael Steadman
Carolyn Cox
Ed Kunkel
Robin Vazquez

CITY MANAGER: Rick Walk, Interim

CITY ATTORNEY: David Schneider

CITY ENGINEER: Aubrey Collier, P.E., S.E.

DIRECTOR OF PUBLIC WORKS: Scott Egger, P.E.

1/31/23

DIRECTOR OF PUBLIC WORKS — DATE

SHEET INDEX

SHEET NO.	PAGE NO.	DESCRIPTION
1	CS	COVER SHEET
2	GN	GENERAL NOTES
3-6	UT1-UT4	UTILITY PLANS
7-8	DT1-DT2	DETAIL SHEETS

LACEY

JUSTIN KNAPP 44096 REGISTERED PROFESSIONAL ENGINEER 1/31/2023

Lacey Dwg. Number :
D-23-01

BLOCK LEGEND:

- SURVEY MONUMENT
- CATCH BASIN TYPE 1
- STORM MANHOLE & CB TYPE 2
- FIRE HYDRANT
- AIR & VACUUM RELEASE VALVE
- WATER METER
- WATER VALVE
- REDUCER
- SPRINKLER HEAD
- SEWER MANHOLE
- SANITARY SEWER CLEAN OUT
- GAS VALVE
- SIGN
- POLE ANCHOR
- POWER TRANSFORMER
- POWER POLE
- POWER VAULT
- TRAFFIC LOOP
- TRAFFIC SIGNAL
- STANDARD TRAFFIC SIGNAL CONTROLLER
- STREET LIGHT
- JUNCTION BOX
- ELECTRICAL SERVICE
- CABLE TV PEDESTAL
- TELEPHONE MANHOLE
- TELEPHONE PEDESTAL
- TREE GRATE
- CONIFER TREE
- DECIDUOUS TREE
- COMMERCIAL SIGN

LINETYPE LEGEND:

- 8+00 — CONSTRUCTION BASELINE
- SS — EASEMENT
- ROAD CENTERLINE
- X — BARB WIRE FENCE
- CHAIN LINK FENCE
- CONCRETE FENCE
- ROCK FENCE
- XXX — WIRE FENCE
- WOOD FENCE
- GRAVEL
- TOE — TOE OF SLOPE
- TOP — TOP OF SLOPE
- DIT — DITCH
- SD — STORM (PAINTED)
- SS — SEWER (PAINTED)
- SS — NEW SEWER
- RIGHT OF WAY
- OTV — OVERHEAD CABLE
- UTV — UNDERGROUND CABLE (PAINTED)
- G — GAS (PAINTED)
- OPH — OVERHEAD PHONE
- OFO — OVERHEAD FIBER OPTIC
- UPH — UNDERGROUND PHONE (PAINTED)
- UFO — UNDERGROUND FIBER OPTIC (PAINTED)
- OHE — OVERHEAD ELECTRIC
- UGE — UNDERGROUND ELECTRIC (PAINTED)
- W — WATER (PAINTED)
- NEW WATER
- RW — RECLAIMED WATER (PAINTED)
- ABANDON EXISTING UTILITY (SEE PLAN)

CONSTRUCTION HATCH TYPES:

- AREA OF 1.5" HMA PAVEMENT REPAIR
- AREA OF ADDED SHOULDER
- AREA OF 8" ROADWAY EX & 6" HMA OVERLAY & 2" CSTC

ABBREVIATIONS:

Δ	DEFLECTION ANGLE
EP	EDGE OF PAVEMENT
RT	RIGHT
LT	LEFT
I.E.	INVERT ELEVATION
P.C.	POINT OF CURVATURE
P.I.	POINT OF INTERSECTION
P.T.	POINT OF TANGENCY
R.	RADIUS
R.P.	RADIUS POINT
R/W	RIGHT-OF-WAY
ROW	RIGHT-OF-WAY
EX.	EXISTING
EXIST.	EXISTING
STA	STATION
S/W	SIDEWALK
C.S.B.C.	CRUSHED SURFACING BASE COURSE
C.S.T.C.	CRUSHED SURFACING TOP COURSE
CL, ℄	CENTERLINE
CB	CATCH BASIN
N/A	NOT APPLICABLE
A/C	ASPHALT CONCRETE
ACP	ASPHALT CONCRETE PAVEMENT
D.I.	DUCTILE IRON
SD	STORM DRAIN
SS	SANITARY SEWER
RPBA	REDUCED PRESSURE BACKFLOW ASSEMBLY
DIA, ø	DIAMETER
A.P.	ANGLE POINT
V.P.I.	VERTICAL POINT OF INTERSECTION
V.P.C.	VERTICAL POINT OF CURVATURE
V.P.T.	VERTICAL POINT OF TANGENCY
EL.	ELEVATION
S.Y.	SQUARE YARD
C.Y.	CUBIC YARD
TYP.	TYPICAL
LUM.	LUMINAIRE
L.F.	LINEAR FEET
RD.	ROAD
DR.	DRIVE
PKWY.	PARKWAY
CONST.	CONSTRUCTION
FT.	FOOT
D/W	DRIVEWAY
APPROX.	APPROXIMATELY
U.O.N.	UNLESS OTHERWISE NOTED

CONSTRUCTION NOTES:

1. CALL 48 HOURS BEFORE YOU DIG 1-800-424-5555 OR 811.
2. THE CONTRACTOR SHALL FIELD VERIFY UTILITY LOCATIONS PRIOR TO CONSTRUCTION.
3. THE CONTRACTOR SHALL NOT REMOVE ANY TREES UNLESS INDICATED ON PLANS OR DIRECTED BY ENGINEER.
4. THE CONTRACTOR SHALL MATCH OVERLAY TO EXISTING PAVEMENT AND DRIVEWAYS AS DIRECTED BY THE ENGINEER.
5. GRINDING LIMITS AND PAVEMENT REPAIR LIMITS SHALL BE IDENTIFIED BY THE ENGINEER IN THE FIELD AND MAY VARY FROM THOSE SHOWN ON THE PLANS.
6. THE CONTRACTOR SHALL RESTORE ALL LANDSCAPING TO EQUAL OR BETTER THAN ORIGINAL CONDITIONS AS DIRECTED BY THE ENGINEER.
7. THE CONTRACTOR SHALL PROTECT ALL EXISTING SURVEY MONUMENTS AND PROPERTY CORNERS. THE CONTRACTOR SHALL BE RESPONSIBLE FOR ALL COSTS ASSOCIATED WITH RESTORING MONUMENTS OR PROPERTY CORNERS OUTSIDE OF THE CONSTRUCTION LIMITS.

BASIS OF BEARING

MERIDIAN IS WASHINGTON COORDINATE SYSTEM OF 1983/91 – SOUTH ZONE DERIVED FROM TIES TO HPGN STATIONS SANDERSON, MCKENNA AND CBL1110 AND TO WSDOT GPS STATIONS G259R, GP34005-2, GP34005-4, GP34101-32, GP34101-39, HC34-2, LUHR RM2, TS34-33, TS34-59 AND TO THURSTON COUNTY GPS STATIONS U-531, AT-194, AT-352, AT-355, AT-447, AT449 AND AT-478.
DISTANCES SHOWN ARE GROUND SCALE U.S. SURVEY FEET. COMBINED SCALE FACTOR (GROUND TO GRID) IS 0.999935701. SURVEY AF# 3111152 DATED 09-24-1997.

METHOD OF SURVEY

SURVEY PERFORMED BY CONVENTIONAL FIELD TRAVERSE USING A LEICA TS-16 (THREE SECOND TOTAL STATION), LINEAR AND ANGULAR CLOSURE OF THE TRAVERSE MEET THE STANDARDS OF WAC 332-130-090.

BOUNDARY

THE BOUNDARY WAS COMPILED USING PHYSICAL FEATURES TIED IN THE FIELD AND DOCUMENTS OF RECORD AS SHOWN BELOW.

SURVEYS REFERENCED
AF#898891, AF#3022896, THCO MULLEN RD CRP 61000, THCO CRP NO. 61000 DWG NO. 021803036.

PLATS REFERENCED
AF#656329, AF#3090015, AF#9505260132

SOURCE OF UTILITY MARKINGS

SURFACE MARKINGS PROVIDED BY UTILITY NOTIFICATION CENTER (callbeforeyoudig.org) TICKET #21303180, 21303212, 21310561, 21310576
NOTE: "COMMUNICATION UTILITIES WERE NOT MARKED IN FIELD"

VERTICAL

THE CITY OF LACEY BENCHMARKS ARE BASED ON NGVD 29 DATUM FROM PRIMARY CONTROL ESTABLISHED BY FEDERAL AND STATE AGENCIES TO FIRST OR SECOND ORDER ACCURACY. THE CITY OF LACEY'S BENCHMARKS ARE GENERALLY TO THIRD ORDER ACCURACY.

BENCHMARK

CITY OF LACEY BM#**790**
RR SPIKE IN FOG LINE, NORTH SIDE OF MULLEN RD SE WEST OF AFFLERBAUGH RD SE, @ D/W TO HSE#7925
ELEV.=187.001

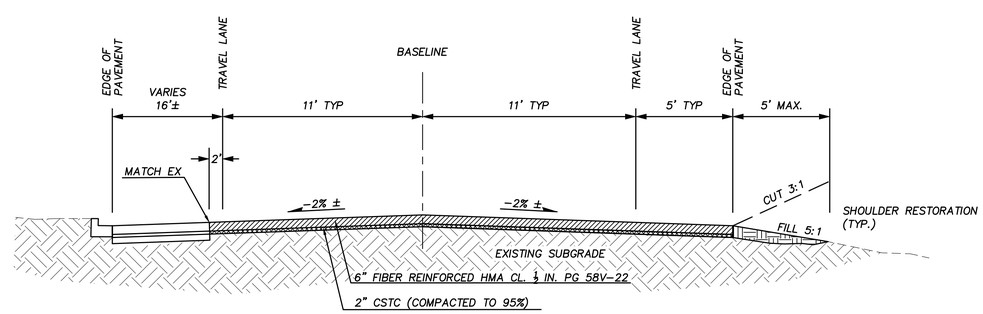

CITY OF LACEY, WASHINGTON
DEPARTMENT OF PUBLIC WORKS
420 COLLEGE STREET SE
LACEY, WA 98503-1238 (360) 491-5600

LACEY

JUSTIN KNOPP — STATE OF WASHINGTON — 44005 — REGISTERED PROFESSIONAL ENGINEER — 11/21/2023

DESIGNED:	BP/JHK
DRAFTED:	BP/JHK
CHECKED:	JHK
HORZ. SCALE:	N/A
VERT. SCALE:	N/A
FILE:	CSGN.DWG

2023 MULLEN RD SEWER IMPROVEMENTS GENERAL NOTES

REVISION BLOCK

NO.	DATE	DESCRIPTION

PAGE NO. GN
DWG NO. D-23-01
SHEET NO. 2 OF 8

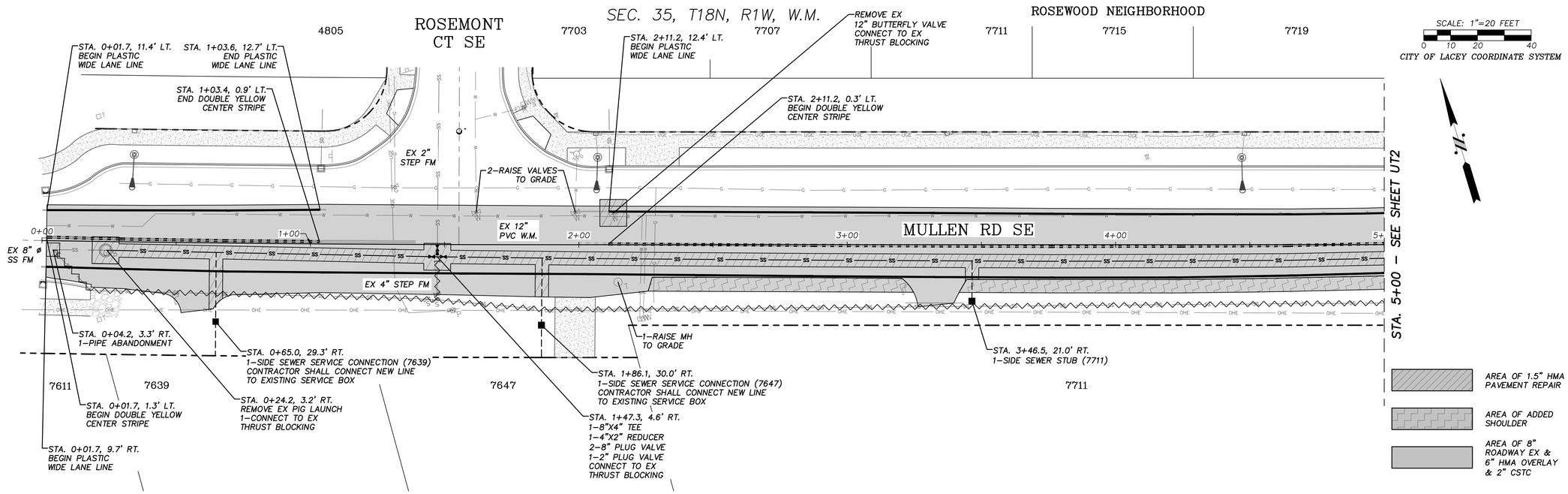

CONSTRUCTION NOTE

CONTRACTOR MUST SAWCUT LONGITUDINAL PAVEMENT JOINTS. FINAL LOCATION OF SAWCUTTING TO BE DETERMINED BY ENGINEER IN FIELD (TYP)

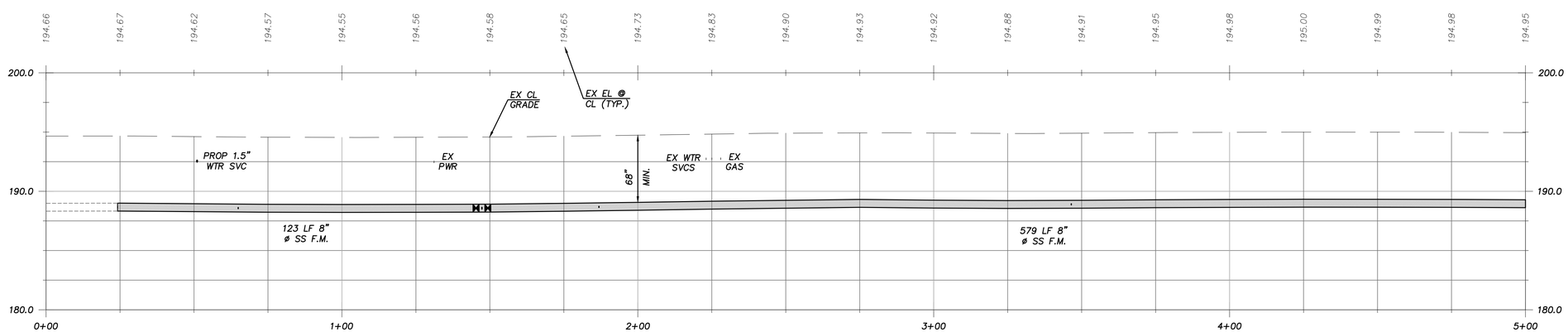

CITY OF LACEY, WASHINGTON DEPARTMENT OF PUBLIC WORKS 420 COLLEGE STREET SE LACEY, WA 98503-1238 (360) 491-5600 LACEY	DESIGNED: BP/JHK DRAFTED: BP/JHK CHECKED: JHK HORZ. SCALE: 1"=20' VERT. SCALE: 1"=5' FILE: MULLEN	2023 MULLEN RD SEWER IMPROVEMENTS STA 0+00 TO 5+00	REVISION BLOCK NO. DATE DESCRIPTION	PAGE NO. UT1 DWG NO. D-23-01	SHEET NO. 3 OF 8

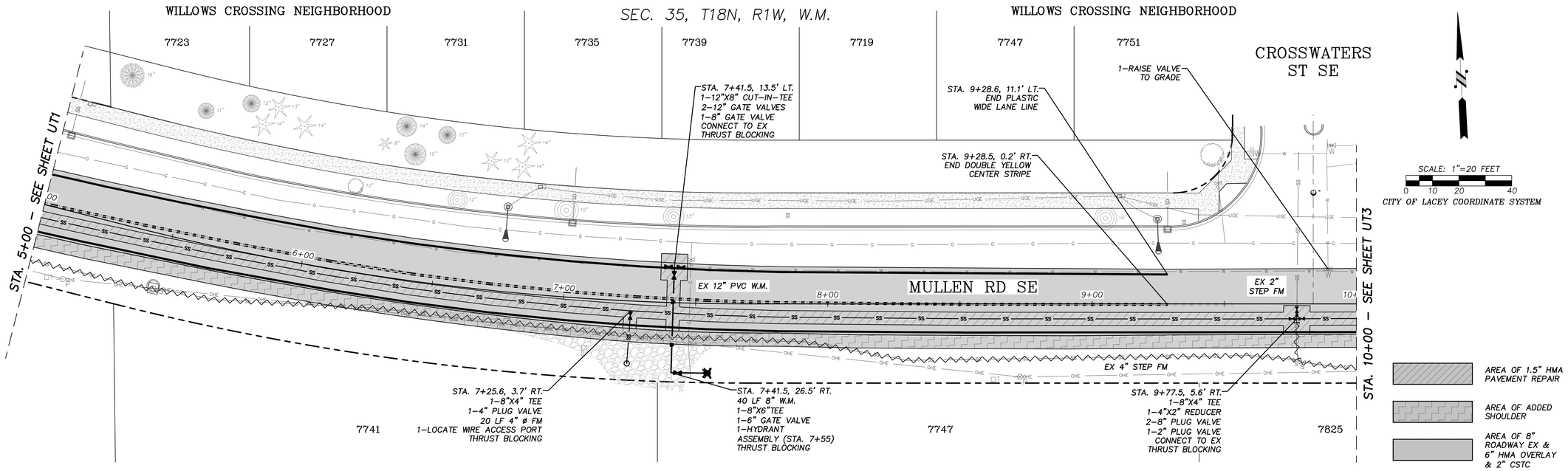

CONSTRUCTION NOTE

CONTRACTOR MUST SAWCUT LONGITUDINAL PAVEMENT JOINTS. FINAL LOCATION OF SAWCUTTING TO BE DETERMINED BY ENGINEER IN FIELD (TYP)

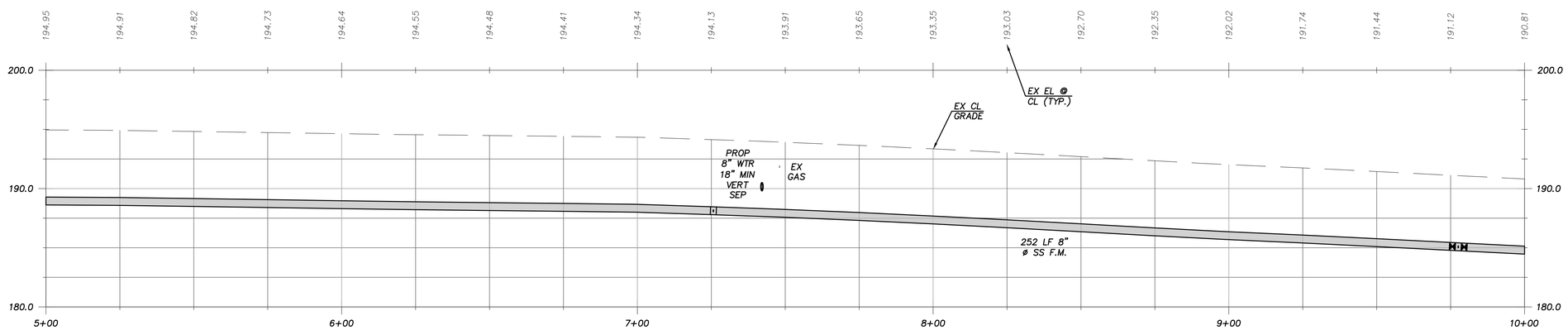

CITY OF LACEY, WASHINGTON DEPARTMENT OF PUBLIC WORKS 420 COLLEGE STREET SE LACEY, WA 98503-1238 (360) 491-5600 LACEY	DESIGNED: BP/JHK DRAFTED: BP/JHK CHECKED: JHK HORZ. SCALE: 1"=20' VERT. SCALE: 1"=5' FILE: MULLEN	2023 MULLEN RD SEWER IMPROVEMENTS STA 5+00 TO 10+00	REVISION BLOCK NO. DATE DESCRIPTION PAGE NO. UT2 DWG NO. D-23-01 SHEET NO. 4 OF 8

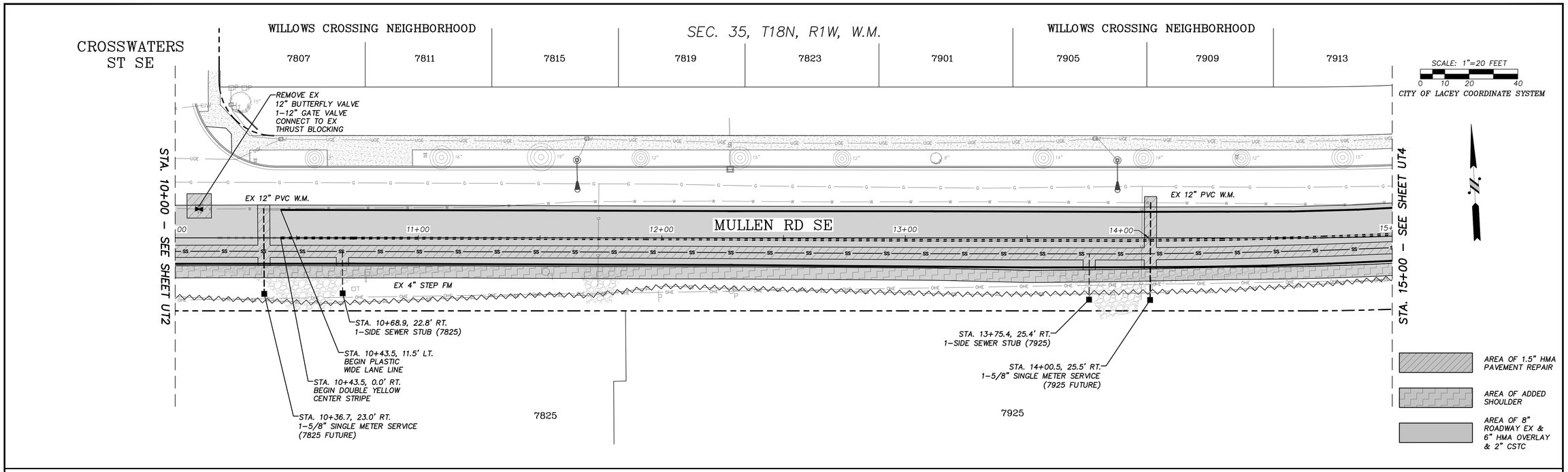

CONSTRUCTION NOTE

CONTRACTOR MUST SAWCUT LONGITUDINAL PAVEMENT JOINTS. FINAL LOCATION OF SAWCUTTING TO BE DETERMINED BY ENGINEER IN FIELD (TYP)

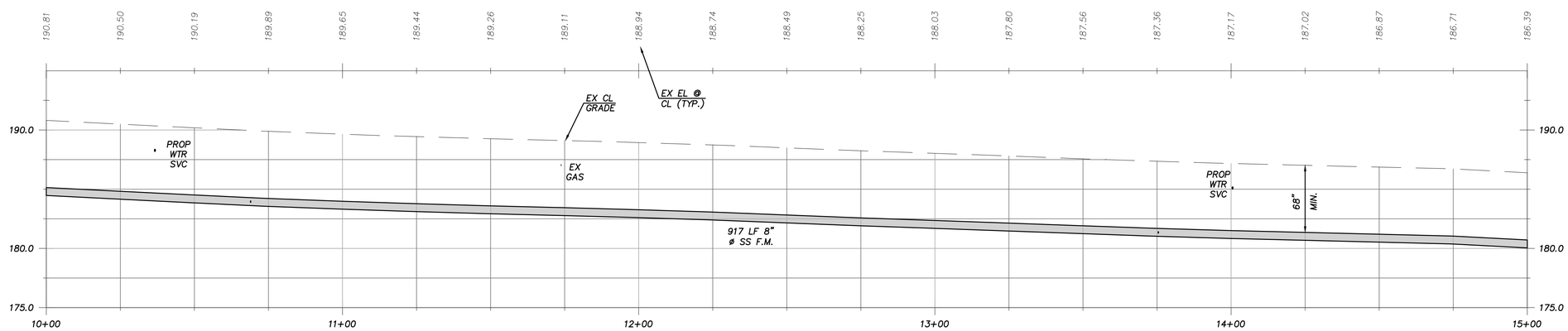

CITY OF LACEY, WASHINGTON
DEPARTMENT OF PUBLIC WORKS
420 COLLEGE STREET SE
LACEY, WA 98503-1238 (360) 491-5600

LACEY

DESIGNED:	BP/JHK
DRAFTED:	BP/JHK
CHECKED:	JHK
HORZ. SCALE:	1"=20'
VERT. SCALE:	1"=5'
FILE:	MULLEN

2023 MULLEN RD SEWER IMPROVEMENTS STA 10+00 TO 15+00

REVISION BLOCK

NO.	DATE	DESCRIPTION

PAGE NO. UT3

DWG NO. D-23-01

SHEET NO. 5 OF 8

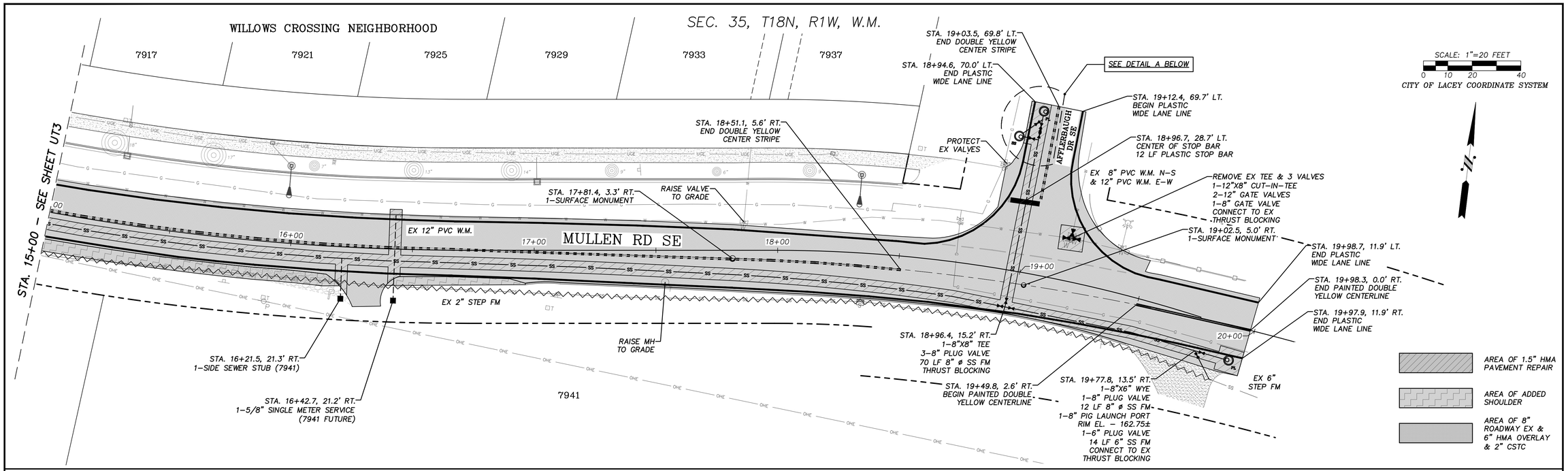

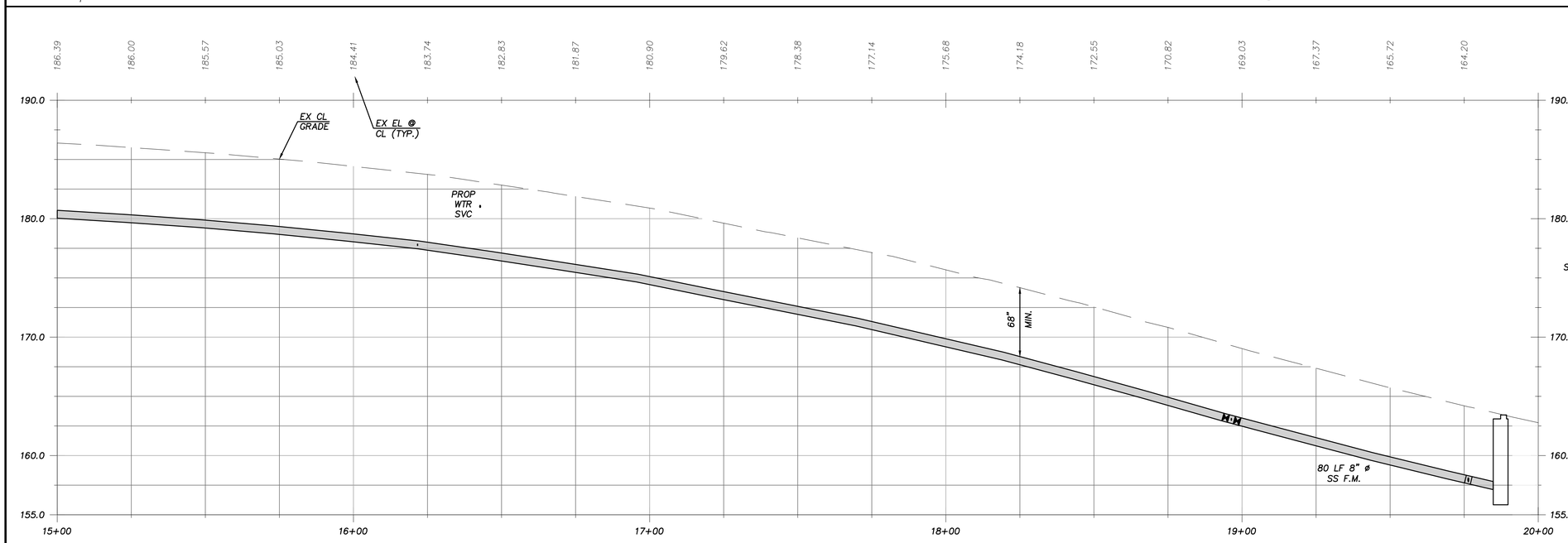

CONSTRUCTION NOTE

CONTRACTOR MUST SAWCUT LONGITUDINAL PAVEMENT JOINTS. FINAL LOCATION OF SAWCUTTING TO BE DETERMINED BY ENGINEER IN FIELD (TYP)

ALL PIPE JOINTS EAST OF THE TEE @ STA 18+96.4 SHALL BE RESTRAINED JOINTS

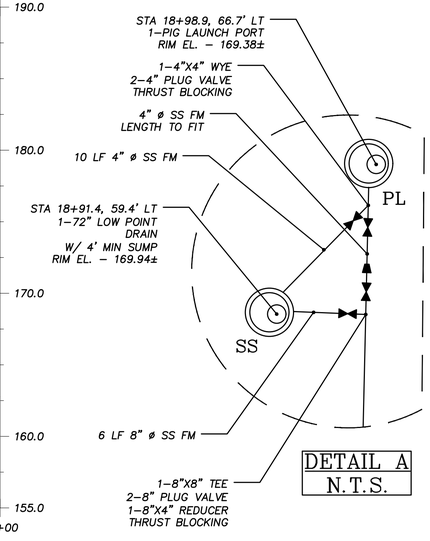

DETAIL A
N.T.S.

CITY OF LACEY, WASHINGTON
DEPARTMENT OF PUBLIC WORKS
420 COLLEGE STREET SE
LACEY, WA 98503–1238 (360) 491–5600
LACEY

DESIGNED:	BP/JHK
DRAFTED:	BP/JHK
CHECKED:	JHK
HORZ. SCALE:	1"=20'
VERT. SCALE:	1"=5'
FILE:	MULLEN

2023 MULLEN RD SEWER IMPROVEMENTS STA 15+00 TO 20+00

REVISION BLOCK

NO.	DATE	DESCRIPTION

PAGE NO. UT4

DWG NO. D–23–01

SHEET NO. 6 OF 8

ENVIRONMENT	METER BOX
TO BE USED IN ALL APPLICATIONS	**CHRISTY FIBRELYTE BOX & LID** BOX: FL 30T-12 LID: FL 30-D W/CITY OF LACEY IN LID

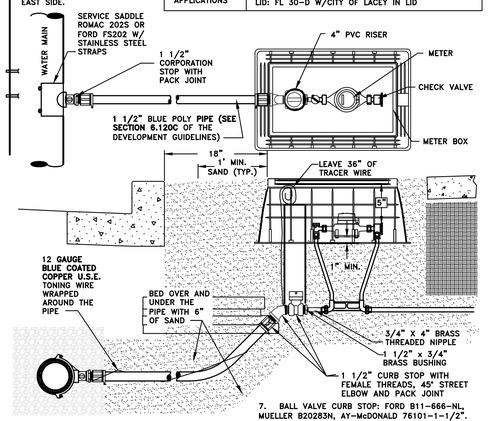

GENERAL NOTES:
1. METER BOXES SHALL NOT BE INSTALLED IN CONCRETE OR CONCRETE DRIVEWAYS. WHEN NECESSARY CREATE PLANTER FOR METER BOX INSTALLATION.
2. STAINLESS STEEL INSERTS ARE REQUIRED FOR ALL PACK JOINT FITTINGS.
3. THE SETTER ANGLE STOP SHALL BE A MINIMUM OF 1" ABOVE BOTTOM OF METER BOX. INSIDE OF BOX SHALL BE CLEAN OF EXCESS SAND OR DEBRIS.
4. FILL THE ENTIRE AREA AROUND AND UNDER THE METER BOX WITH A MINIMUM 1' OF SAND.
5. ALL BRASS AND COPPER SHALL BE LOW LEAD COMPLIANT.
6. COPPER METER SETTERS: FORD VBH 72-15W, MUELLER B2402-R2EF15, AY-McDONALD 20-215WCDD33.
7. BALL VALVE CURB STOP: FORD B11-666-NL, MUELLER B20283N, AY-McDONALD 76101-1-1/2".
8. BALL VALVE CORPORATION STOP: FORD FB-1101-6G-NL, MUELLER E25029N, AY-McDONALD 74704B-33-1-1/2".

5/8" SINGLE METER SERVICE
N.T.S.

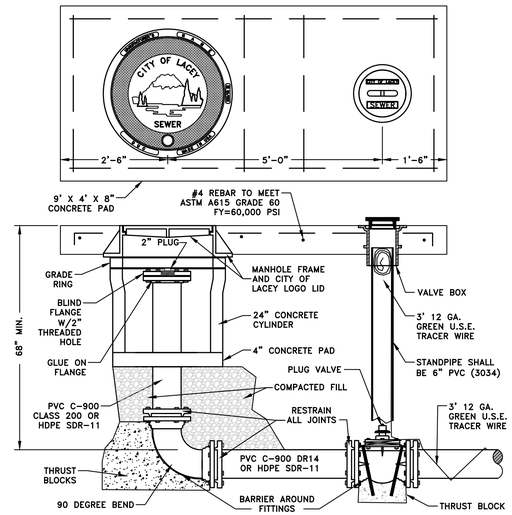

GENERAL NOTES:
1. FOR VALVE BOX AND VALVE STEM RISER REQUIREMENTS SEE DETAIL 7-9.
2. THE PIG LAUNCH SIZES SHALL BE THE SAME SIZE AS THE MAIN.
3. THE MANHOLE FRAME AND COVER SHALL BE THE CITY OF LACEY "LOGO" LID SEE DETAIL 7-3.
4. PIG LAUNCH 10" OR LARGER SHALL REQUIRE SPECIAL DESIGN AND APPROVAL BY THE CITY AND MAY REQUIRE A LARGER MANHOLE LID OPENING OR A SPECIAL VAULT.
5. IN A CUL-DE-SAC SCENARIO THE LAUNCH PORT SHALL END AT THE MIDDLE OF THE SAC.

PIG LAUNCH PORT (4" – 8")
N.T.S.

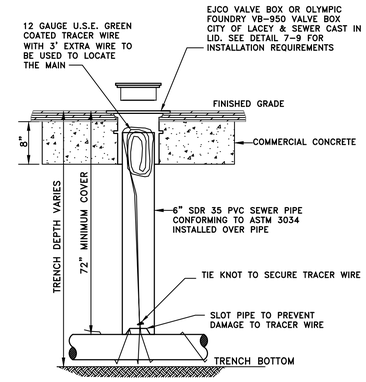

GENERAL NOTE:
1. TRACER WIRE ACCESS PORT SHALL BE INSTALLED EVERY 500 FEET WHEN NO APPURTENANCES ARE CONNECTED TO IT.

LOCATE WIRE ACCESS PORT
N.T.S.

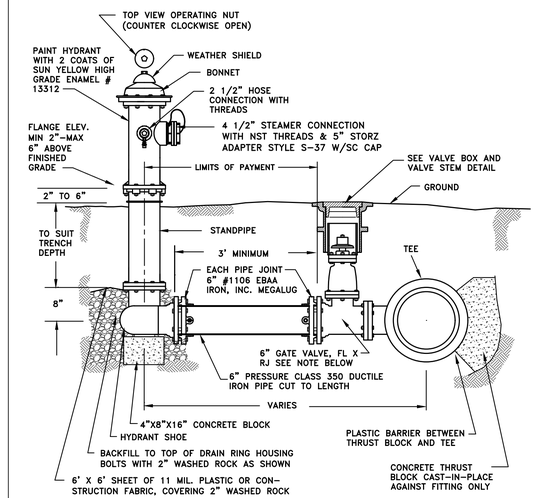

GENERAL NOTES:
1. A MINIMUM FIVE FOOT RADIUS OF UNOBSTRUCTED WORKING AREA SHALL BE PROVIDED AROUND ALL HYDRANTS. THE UNOBSTRUCTED AREA SHALL INCLUDE BUT NOT BE LIMITED TO TREES, SCHRUBS AND PLANTS.
2. REMOVE FACTORY CHAINS HOLDING CAPS.
3. WHEN DISTANCE BETWEEN HYDRANT AND VALVE EXCEED 20 FEET, FIELDLOCK GASKETS SHALL BE ALLOWED.

FIRE HYDRANT
N.T.S.

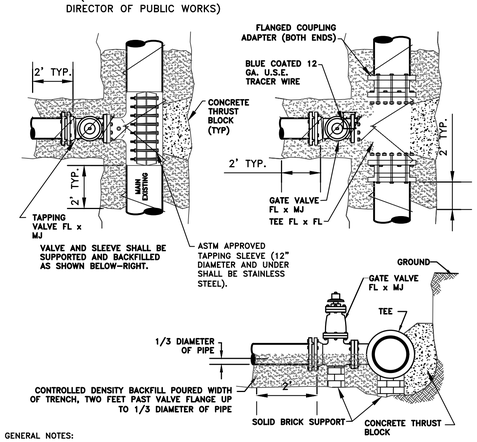

GENERAL NOTES:
1. 11 MIL. PLASTIC OR CONSTRUCTION FABRIC SHALL BE WRAPPED AROUND PIPE AND FITTINGS BEFORE THRUST BLOCK OR CDF BACKFILL ARE POURED.
2. CONTROLLED DENSITY FILL SHALL CONSIST OF 1750# SAND, 1750# PEA GRAVEL, 230# WATER, 141# CEMENT, 6 OUNCES WATER REDUCING AGENT PER 100# CEMENT.
3. THE EXISTING MAIN, TAPPING SLEEVE AND VALVE SHALL BE SUPPORTED THROUGHOUT THE ENTIRE PROCESS WHEN TAPPING THE EXISTING WATER MAIN.
4. CONNECT TO EXISTING TRACER WIRE, IF PRESENT.
5. CUTTING AC PIPE REQUIRES PROPER AC CUTTING AND DISPOSAL PRACTICES BE FOLLOWED. REFER TO OLYMPIC AIR POLLUTION CONTROL AUTHORITY DOCUMENT AND AWWA AC PIPE CUTTING DOCUMENT. AC PIPE CUTTER SHALL BE CERTIFIED.
6. ADDITIONAL VALVES MAYBE REQUIRED WITH CUT IN OFF TEE.

CONNECTION TO EXISTING MAIN
N.T.S.

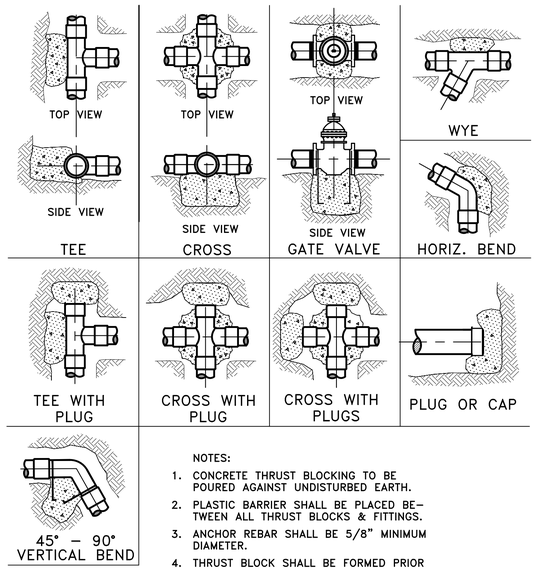

NOTES:
1. CONCRETE THRUST BLOCKING TO BE POURED AGAINST UNDISTURBED EARTH.
2. PLASTIC BARRIER SHALL BE PLACED BETWEEN ALL THRUST BLOCKS & FITTINGS.
3. ANCHOR REBAR SHALL BE 5/8" MINIMUM DIAMETER.
4. THRUST BLOCK SHALL BE FORMED PRIOR TO CONCRETE BEING POURED.

STANDARD BLOCKING DETAIL
N.T.S.

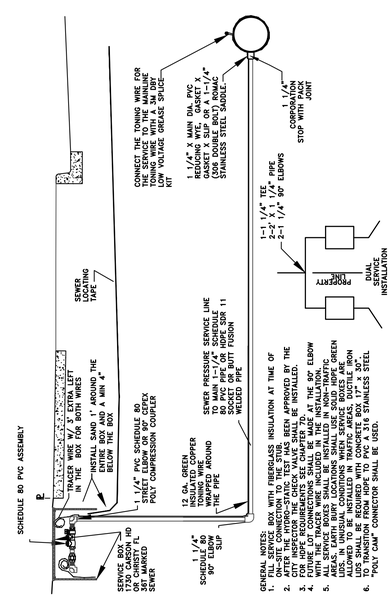

GENERAL NOTES:
1. FILL SERVICE BOX WITH FIBERGLASS INSULATION AT TIME OF INSTALLATION TO PREVENT FREEZING.
2. AFTER THE HYDRO-STATIC TEST HAS BEEN APPROVED BY THE CITY, PRESSURE SERVICE LINE SHALL BE INSTALLED.
3. FITTINGS MUST BE WRAPPED WITH 11 MIL PLASTIC FOR HDPE REQUIREMENTS SEE CHAPTER 12.
4. THE TONING WIRE SHALL BE WRAPPED AROUND THE ELBOW WITH THE TRACER WIRE INCLUDED IN THE INSTALLATION.
5. ALL SERVICE BOXES SHALL BE INSTALLED IN NON-TRAFFIC AREAS. ALL SERVICE BOXES SHALL BE INSTALLED BETWEEN LOTS. IN UNUSUAL CONDITIONS WHEN SERVICE BOXES ARE INSTALLED IN AREAS SUBJECT TO VEHICULAR TRAFFIC BOXES LIDS SHALL BE REQUIRED WITH CONCRETE BOX 17" x 35".
6. THE TONING WIRE SHALL BE CONNECTED TO A 316 STAINLESS STEEL "POLY CAM" CONNECTOR SHALL BE USED.

SINGLE & DUPLEX FAMILY SERVICE STEP CONNECTION
N.T.S

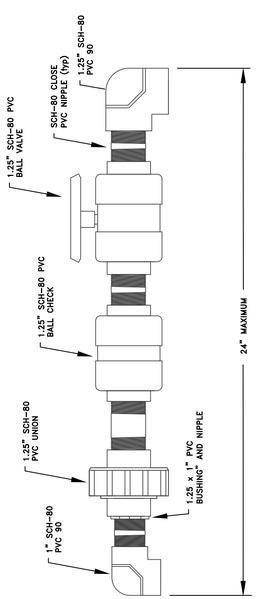

GENERAL NOTES:
1. VALVE ASSEMBLY SHALL BE ALL SCHEDULE 80 PVC SPEARS, KBI, CEPEX OR APPROVED EQUAL.
2. FUTURE LOT CONNECTIONS SHALL BE MADE AT THE 90° ELBOW WITH THE TRACER WIRE INCLUDED IN THE INSTALLATION.
3. TO TRANSITION FROM HDPE TO PVC A 316 STAINLESS STEEL "POLY CAM" CONNECTOR SHALL BE USED.

SEWER SERVICE CONNECTION
N.T.S.

CITY OF LACEY, WASHINGTON
DEPARTMENT OF PUBLIC WORKS
420 COLLEGE STREET S.E. P.O. BOX 3400
LACEY, WA 98509-3400 (360) 491-5600

LACEY

JUSTIN KNOX — STATE OF WASHINGTON — 44596 — REGISTERED PROFESSIONAL ENGINEER — 1/31/23

DESIGNED:	BP/JHK
DRAFTED:	BP/JHK
CHECKED:	JHK
HORZ. SCALE:	N/A
VERT. SCALE:	N/A
FILE:	DT1

2023 MULLEN RD SEWER IMPROVEMENTS DETAIL SHEET

REVISION BLOCK		
NO.	DATE	DESCRIPTION

PAGE NO.	SHEET NO.
DT1	7 OF 8
DWG NO. D-23-01	

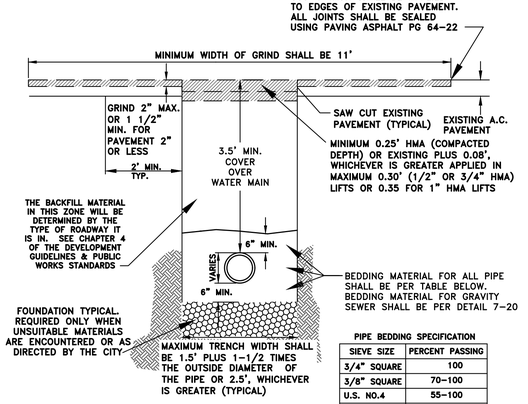

PIPE BEDDING SPECIFICATION

SIEVE SIZE	PERCENT PASSING
3/4" SQUARE	100
3/8" SQUARE	70-100
U.S. NO.4	55-100
U.S. NO. 10	35-95
U.S. NO. 20	20-80
U.S. NO. 40	10-55
U.S. NO. 100	0-10
U.S. NO. 200	0-03

GENERAL NOTES:
1. ALL MATERIALS EXCEPT H.M.A. SHALL BE COMPACTED IN 6-INCH MAXIMUM LIFTS TO 95% DENSITY AS DETERMINED BY ASTM D1557.
2. ALL MATERIALS, WORKMANSHIP, AND INSTALLATION SHALL BE IN CONFORMANCE WITH THE WSDOT STANDARD SPECIFICATIONS FOR ROAD, BRIDGE AND MUNICIPAL CONSTRUCTION AS AMENDED BY CITY OF LACEY STANDARDS.
3. KEEP TRENCH BOTTOM COMPACTED WITH UNIFORM GRADE. NO TEMPORARY SUPPORTS, I.E. BLOCKS, WILL BE ALLOWED TO SUPPORT PIPE. TRENCH BOTTOM SHALL BE TO GRADE PRIOR TO PIPE INSTALLATION.
4. WHENEVER GROUND WATER IS PRESENT A BARRIER SHALL BE INSTALLED ABOVE THE BEDDING.
5. EXISTING SURFACES PAVED WITH PERMEABLE MATERIALS SHALL BE REPLACED IN-KIND WHERE FEASIBLE IN CONFORMANCE WITH 4B.180 TRENCH BACKFILL AND RESTORATION.

TRENCH RESTORATION – CITY
N.T.S.

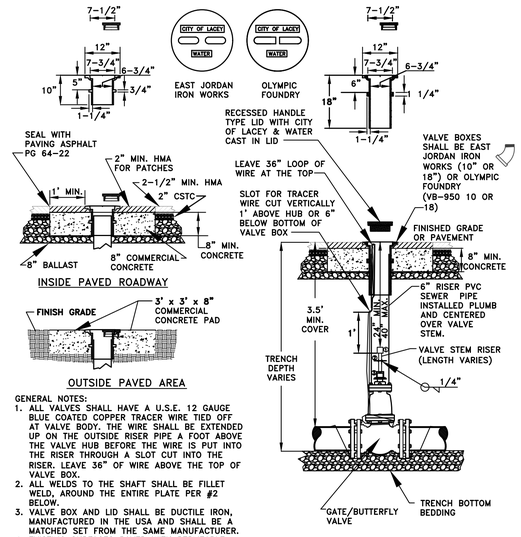

GENERAL NOTES:
1. ALL VALVES SHALL HAVE A U.S.E. 12 GAUGE BLUE COATED COPPER TRACER WIRE TIED OFF AT VALVE BODY. THE WIRE SHALL BE EXTENDED UP ON THE OUTSIDE RISER PIPE A FOOT ABOVE THE VALVE HUB BEFORE THE WIRE IS PUT INTO THE RISER THROUGH A SLOT CUT INTO THE RISER. LEAVE 36" OF WIRE ABOVE THE TOP OF VALVE BOX.
2. ALL WELDS TO THE SHAFT SHALL BE FILLET WELD, AROUND THE ENTIRE PLATE PER #2 BELOW.
3. VALVE BOX AND LID SHALL BE DUCTILE IRON, MANUFACTURED IN THE USA AND SHALL BE A MATCHED SET FROM THE SAME MANUFACTURER.
4. EXISTING SURFACES PAVED WITH PERMEABLE MATERIALS SHALL BE REPLACED IN-KIND WHERE FEASIBLE IN CONFORMANCE WITH 4B.180 TRENCH BACKFILL AND RESTORATION.

VALVE STEM EXTENSION LEGEND
1. VALVE OPERATING NUT OR 1-7/8" X 1-7/8" X 2" HIGH GRADE STEEL WELDED TO GUIDE PLATE.
2. 3/16" THICK X 5 1/5" DIA STEEL GUIDE PLATE WELDED TO RISER SHAFT.
3. 2"X2"X 3/16" SQUARE STRUCTURAL STEEL TUBING TO FIT OPERATING NUT. LENGTH AS REQUIRED.

STANDARD VALVE BOX INSTALLATION
N.T.S.

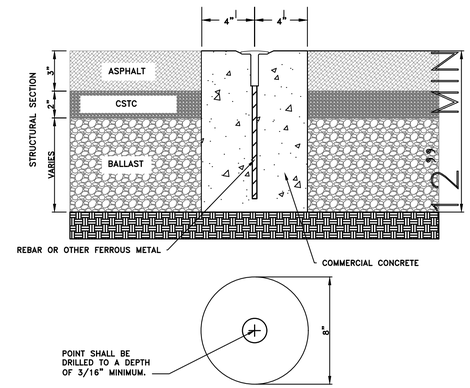

GENERAL NOTES:
1. THIS MONUMENT TO BE USED PRIMARILY ON BITUMINOUS OR ASPHALT CONCRETE PAVEMENT FOR USE PRIMARILY IN SUBDIVISIONS AND MINOR ARTERIALS.
2. THE CONCRETE BASE SHALL BE 8" IN DIAMETER AND CORE DRILLED. CONCRETE BASE NEED NOT BE FORMED.
3. CAP SHALL BE BRASS, ALUMINUM OR OTHER NON-FERROUS METAL, MINIMUM 2 1/2 " DIAMETER
4. CONCRETE TO BE PLACED ON A FIRM AND UNYIELDING FOUNDATION.
5. MONUMENT POSITION SHALL BE SET BY A PROFESSIONAL LAND SURVEYOR LICENSED BY THE STATE OF WASHINGTON WHOSE CERTIFICATE NUMBER SHALL BE STAMPED ON CAP.
6. SUFFICIENT FERROUS METAL SHALL BE PLACED IN CONCRETE TO ALLOW DETECTION BY A METAL DETECTOR.
7. EXISTING SURFACES PAVED WITH PERMEABLE MATERIALS SHALL BE REPLACED IN-KIND WHERE FEASIBLE IN CONFORMANCE WITH 4B.180 TRENCH BACKFILL AND RESTORATION.

CAST IN PLACE MONUMENT
N.T.S.

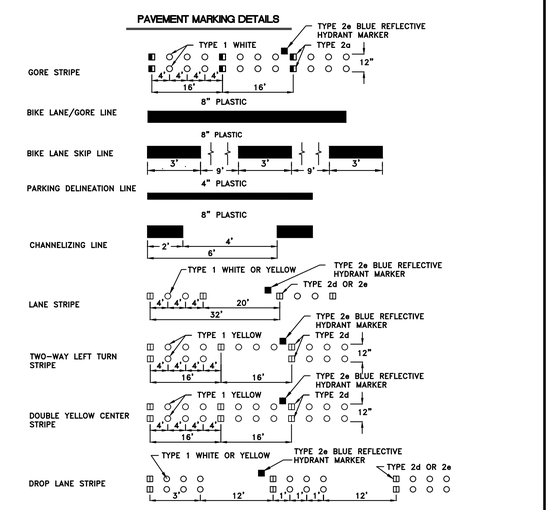

LANE MARKERS
- TYPE 1 LANE MARKERS, WHITE OR YELLOW
- TYPE 2a REFLECTIVE LANE MARKER, WHITE AND RED
- TYPE 2d REFLECTIVE LANE MARKER, YELLOW AND YELLOW
- TYPE 2e REFLECTIVE LANE MARKER, WHITE ONE SIDE ONLY
- TYPE 2e TWO WAY BLUE REFLECTIVE HYDRANT MARKER INSTALLED 8" ON CENTER FROM THE CENTER OF THE ROADWAY.

STRIPING DETAIL
N.T.S.

RAISE VALVE BOX TO GRADE

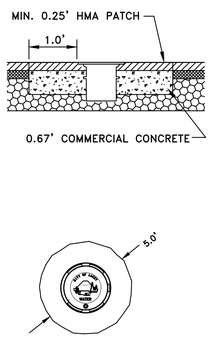

RAISE MANHOLE TO GRADE

IN ASPHALT

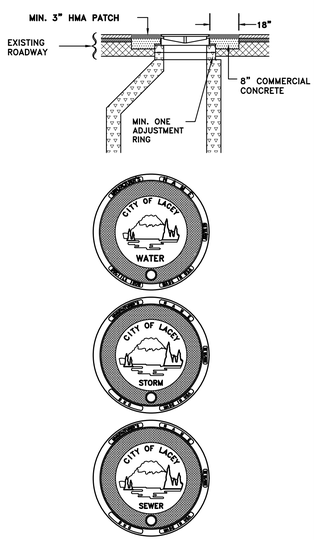

GENERAL NOTES:
1. ON MANHOLES OUTSIDE OF THE ASPHALT ADD REINFORCING STEEL AS SHOWN ABOVE, DEFORMED BAR TO MEET ASTM A615 GRADE 60 FY=60,000 P.S.I.
2. ALL WATER MANHOLE LIDS SHALL BE EAST JORDAN IRON WORKS OR OLYMPIC FOUNDARY WSDOT STYLE #MH-41 CITY OF LACEY LOGO LIDS.
3. ALL LIDS SHALL BE DUCTILE IRON AND MANUFACTURED IN THE USA.

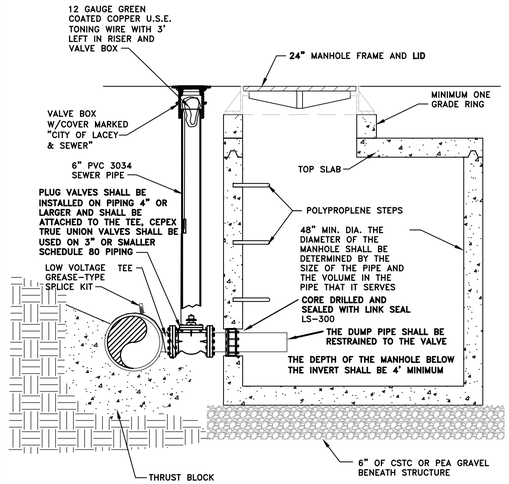

GENERAL NOTES:
1. INSTALL A CONCRETE PAD WHEN LOW POINT DRAIN MANHOLE IS INSTALLED OUTSIDE OF PAVED AREA.
2. THE MANHOLE LID SHALL BE THE CITY OF LACEY "LOGO" LID SEE DETAIL 7-3.
3. THE SIZE OF THE LOW POINT DRAIN SHALL BE APPROVED BY THE CITY.
4. UP TO 3 VALVES MAYBE REQUIRED AT THE LOW POINT DRAIN.
5. FOR VALVE BOX REQUIREMENTS SEE DETAIL 7-9.

LOW POINT DRAIN
N.T.S.

NOTE: THE CONTRACTOR SHALL PREPARE DRIVEWAY TRANSITIONS FOR HMA PRIOR TO PLACEMENT.
* DRIVEWAY APRONS WILL NOT BE REQUIRED IN AREAS WHERE WEDGE CURB PREVIOUSLY EXISTS, AND IS TO REMAIN IN PLACE.

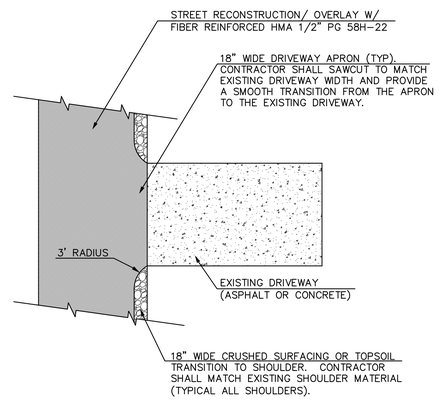

DRIVEWAY APRON & SHOULDER DETAIL FOR PAVED DRIVEWAYS
N.T.S.

NOTE: THE CONTRACTOR SHALL PREPARE DRIVEWAY TRANSITIONS FOR HMA PRIOR TO PLACEMENT.
* DRIVEWAY APRONS WILL NOT BE REQUIRED IN AREAS WHERE WEDGE CURB PREVIOUSLY EXISTS, AND IS TO REMAIN IN PLACE.

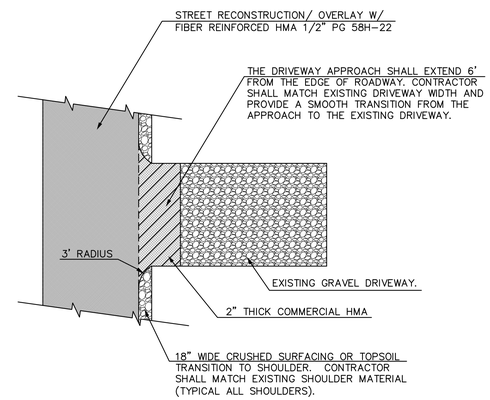

DRIVEWAY APPROACH & SHOULDER DETAIL FOR GRAVEL DRIVEWAYS
N.T.S.

CITY OF LACEY, WASHINGTON
DEPARTMENT OF PUBLIC WORKS
420 COLLEGE STREET S.E. P.O. BOX 3400
LACEY, WA 98509-3400 (360) 491-5600

LACEY

JUSTIN KNOX, STATE OF WASHINGTON, 44686, REGISTERED PROFESSIONAL ENGINEER, 11/8/2023

DESIGNED:	BP/JHK
DRAFTED:	BP/JHK
CHECKED:	JHK
HORZ. SCALE:	N/A
VERT. SCALE:	N/A
FILE:	DT1

2023 MULLEN RD SEWER IMPROVEMENTS DETAIL SHEET

REVISION BLOCK

NO.	DATE	DESCRIPTION

PAGE NO. DT2

DWG NO. D-23-01

SHEET NO. 8 OF 8