CITY OF LACEY, WASHINGTON

MADRONA AND WESTSIDE PH TREATMENT PROJECTS

LACEY CONTRACT #PW 2022-37

JANUARY 2024

SCHEDULE B

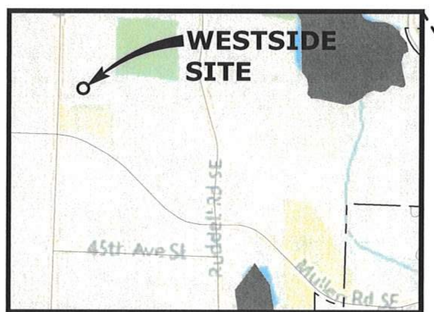

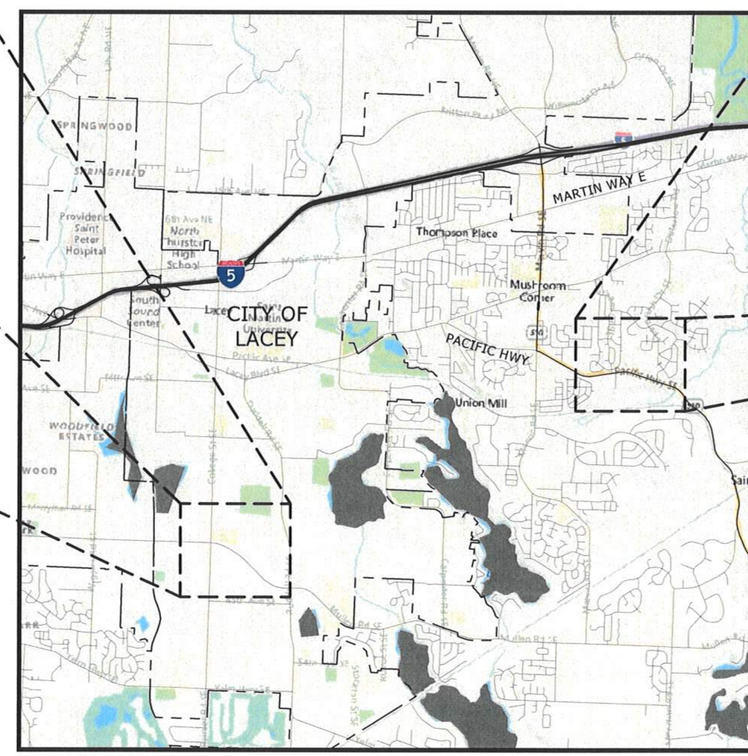

SCHEDULE A

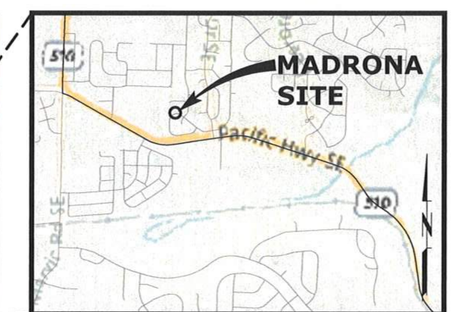

VICINITY MAP

SCALE: 1"=1/2 MILE

CITY OF LACEY OFFICIALS

CONTACT:
360-491-5600

MAYOR:
ANDY RYDER

DEPUTY MAYOR:
MALCOLM MILLER

COUNCIL MEMBERS:
LENNY GREENSTEIN
MICHAEL STEADMAN
CAROLYN COX
ROBIN VASQUEZ
NICOLAS DUNNING

CITY MANAGER:
RICK WALK

CITY ATTORNEY:
DAVE SCHNEIDER

CITY ENGINEER:
AUBREY COLLIER, P.E., S.E.

DIRECTOR OF PUBLIC WORKS:
SCOTT EGGER, P.E.

Scott Egger 2/1/24

APPROVED FOR CONSTRUCTION
DIRECTOR OF PUBLIC WORKS

DATE

consor
1102 BROADWAY PLAZA, SUITE 401
TACOMA, WA 98402

811
Know what's below.
Call before you dig.

D-21-33

k:\tac_projects\21\3028 - lacey - madrona ph treatment\CAD\Sheets\21-3028-WA-G.dwg G-0 1/30/2024 11:54 AM SEAN.WALMSLEY 23.0s (LMS Tech)

SCHEDULE A
MADRONA PH TREATMENT PROJECT
LACEY CONTRACT #PW 2022-37

JANUARY 2024 THURSTON COUNTY PROJECT NO. 2021104687

SECTION: 32 TOWNSHIP: 18N RANGE: 1W
ADDRESS: 8824 MILBANKE DRIVE SE, OLYMPIA WA 98513

VICINITY MAP
SCALE: 1"=1/2 MILE

CITY OF LACEY OFFICIALS

CONTACT:
360-491-5600

MAYOR:
ANDY RYDER

DEPUTY MAYOR:
MALCOLM MILLER

COUNCIL MEMBERS:
LENNY GREENSTEIN
MICHAEL STEADMAN
CAROLYN COX
ROBIN VASQUEZ
NICOLAS DUNNING

CITY MANAGER:
RICK WALK

CITY ATTORNEY:
DAVE SCHNEIDER

CITY ENGINEER:
AUBREY COLLIER, P.E., S.E.

DIRECTOR OF PUBLIC WORKS:
SCOTT EGGER, P.E.

Scott Egger 2/1/24
APPROVED FOR CONSTRUCTION DATE
DIRECTOR OF PUBLIC WORKS

consor
1102 BROADWAY PLAZA, SUITE 401
TACOMA, WA 98402

811 Know what's below. Call before you dig.

D-21-33

k:\tac_projects\21\3028 - lacey - madrona ph treatment\CAD\Sheets\21-3028-WA-G.dwg G-1 1/30/2024 11:54 AM SEAN.WALMSLEY 23.0s (LMS Tech)

SCHEDULE B
WESTSIDE PH TREATMENT PROJECT
LACEY CONTRACT #PW 2022-37

JANUARY 2024

SECTION: 28 TOWNSHIP: 18N RANGE: 1W
ADDRESS: 3300 COLLEGE ST SE, LACEY WA 98503

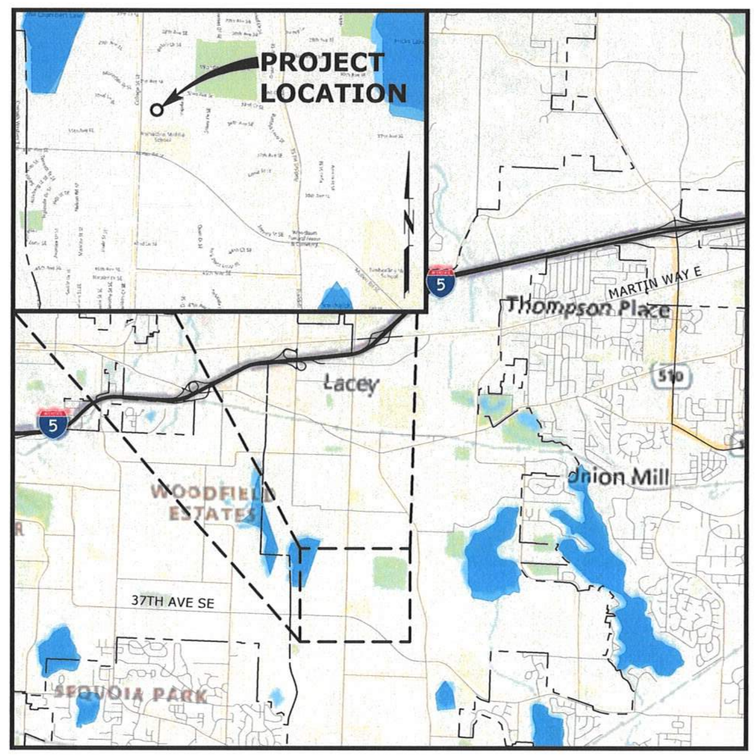

VICINITY MAP
SCALE: 1"=1/2 MILE

CITY OF LACEY OFFICIALS

CONTACT:
360-491-5600

MAYOR:
ANDY RYDER

DEPUTY MAYOR:
MALCOLM MILLER

COUNCIL MEMBERS:
LENNY GREENSTEIN
MICHAEL STEADMAN
CAROLYN COX
ROBIN VASQUEZ
NICOLAS DUNNING

CITY MANAGER:
RICK WALK

CITY ATTORNEY:
DAVE SCHNEIDER

CITY ENGINEER:
AUBREY COLLIER, P.E., S.E.

DIRECTOR OF PUBLIC WORKS:
SCOTT EGGER, P.E.

Scott Egger 2/1/24
APPROVED FOR CONSTRUCTION — DATE
DIRECTOR OF PUBLIC WORKS

consor
1145 BROADWAY
TACOMA, WA 98402

811 Know what's below. Call before you dig.

k:\tac_projects\21\3172 - lacey - westside ph treatment\CAD\Sheets\21-3172-WA-G.dwg G-1 1/30/2024 12:03 PM SEAN.WALMSLEY 23.0s (LMS Tech)

SECTION: 32 TOWNSHIP: 18N RANGE: 1W

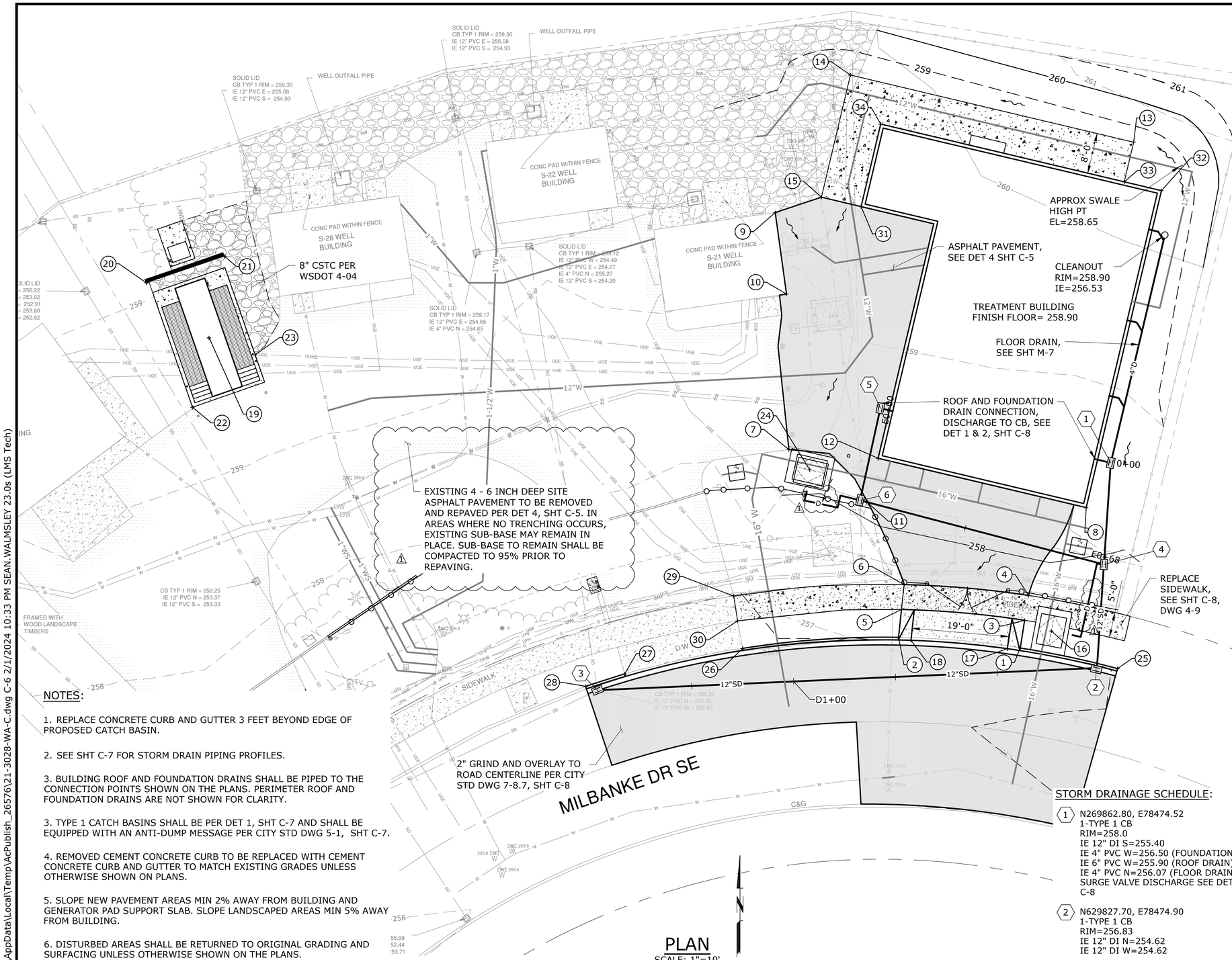

PLAN
SCALE: 1"=10'

GRADING POINTS

PT NO.	DESCRIPTION	NORTHING	EASTING	ELEVATION
1	TOP BACK OF CURB E	N629831.81	E78460.05	257.22
2	TOP BACK OF CURB W (ME)	N629833.93	E78436.14	257.07
3	SIDEWALK E (ME)	N629837.26	E78460.90	257.29
4	SIDEWALK E (ME)	N629842.14	E78461.67	257.38
5	SIDEWALK W (ME)	N629839.39	E78436.73	257.17
6	SIDEWALK W (ME)	N629844.28	E78437.25	257.26
7	PAVEMENT EDGE (ME)	N629870.81	E78414.62	258.32
8	TREAT BLDG SE CORNER	N629859.40	E78473.00	258.80
9	EXIST BLDG NE CORNER (ME)	N629917.35	E78411.93	258.91
10	EXIST BLDG SE CORNER (ME)	N629901.34	E78414.15	258.82
11	ASPHALT EDGE	N629860.31	E78430.16	258.20
12	TREAT BLDG SW CORNER	N629869.09	E78432.13	258.80
13	SIDEWALK NE CORNER	N629931.18	E78482.32	258.74
14	SIDEWALK NW CORNER	N629944.38	E78426.70	258.60
15	SIDEWALK SW CORNER	N629920.38	E78421.00	258.54
16	400 METER VAULT HATCH CENTER	N629835.18	E78466.16	257.32
17	FLOW LINE AT DRIVEWAY CURB CUT E (ME)	N629831.69	E78457.50	256.72
18	FLOW LINE AT DRIVEWAY CURB CUT W (ME)	N629833.33	E78438.59	256.57
19	GENERATOR FDN CENTER	N629892.79	E78300.75	259.18
20	SOUND WALL NW CORNER (FRONT)	N629903.53	E78288.46	259.00
21	SOUND WALL NE CORNER (FRONT)	N629908.79	E78303.76	259.00
22	GENERATOR FDN CORNER (ME)	N629879.12	E78297.49	259.11
23	TOP ASPHALT/CSTC CORNER	N629889.40	E78309.80	259.10
24	337 METER VAULT HATCH CENTER	N629866.80	E78418.72	258.32
25	TOP BACK OF CURB E (ME)	N629827.77	E78479.14	257.32
26	TOP BACK OF CURB W (ME)	N629831.75	E78405.53	256.89
27	TOP BACK OF CURB E (ME)	N629826.75	E78382.38	256.71
28	TOP BACK OF CURB W (ME)	N629824.30	E78374.72	256.71
29	SIDEWALK W (ME)	N629842.02	E78403.79	256.92
30	SIDEWALK W (ME)	N629837.15	E78404.53	256.92
31	FG AT TREAT BLD NW CORNER	N629918.53	E78428.79	258.70
32	FG AT TREAT BLD NE CORNER	N629921.67	E78487.77	258.80
33	SIDEWALK CORNER	N629923.40	E78480.47	258.90
34	SIDEWALK CORNER	N629934.75	E78432.63	258.80

NOTES:

1. REPLACE CONCRETE CURB AND GUTTER 3 FEET BEYOND EDGE OF PROPOSED CATCH BASIN.

2. SEE SHT C-7 FOR STORM DRAIN PIPING PROFILES.

3. BUILDING ROOF AND FOUNDATION DRAINS SHALL BE PIPED TO THE CONNECTION POINTS SHOWN ON THE PLANS. PERIMETER ROOF AND FOUNDATION DRAINS ARE NOT SHOWN FOR CLARITY.

3. TYPE 1 CATCH BASINS SHALL BE PER DET 1, SHT C-7 AND SHALL BE EQUIPPED WITH AN ANTI-DUMP MESSAGE PER CITY STD DWG 5-1, SHT C-7.

4. REMOVED CEMENT CONCRETE CURB TO BE REPLACED WITH CEMENT CONCRETE CURB AND GUTTER TO MATCH EXISTING GRADES UNLESS OTHERWISE SHOWN ON PLANS.

5. SLOPE NEW PAVEMENT AREAS MIN 2% AWAY FROM BUILDING AND GENERATOR PAD SUPPORT SLAB. SLOPE LANDSCAPED AREAS MIN 5% AWAY FROM BUILDING.

6. DISTURBED AREAS SHALL BE RETURNED TO ORIGINAL GRADING AND SURFACING UNLESS OTHERWISE SHOWN ON THE PLANS.

STORM DRAINAGE SCHEDULE:

(1) N269862.80, E78474.52
1-TYPE 1 CB
RIM=258.0
IE 12" DI S=255.40
IE 4" PVC W=256.50 (FOUNDATION DRAIN)
IE 6" PVC W=255.90 (ROOF DRAIN)
IE 4" PVC N=256.07 (FLOOR DRAIN)
SURGE VALVE DISCHARGE SEE DET 4, SHT C-8

(2) N629827.70, E78474.90
1-TYPE 1 CB
RIM=256.83
IE 12" DI N=254.62
IE 12" DI W=254.62

(3) N629823.52, E78377.48
1-TYPE 1 CB
RIM=256.23
IE 12" DI E=253.64
IE 12" PVC W=252.80 (EXIST)
IE 12" PVC N=252.96 (EXIST)

(4) N629842.14, E78461.66
1-TYPE 1 CB
RIM=257.88
IE 12" DI N=254.82
IE 12" DI S=254.82
IE 12" DI W=254.82

(5) N629878.92, E78432.58
1-TYPE 1 CB
RIM=258.90
IE 12" DI S=255.50
IE 4" PVC N=256.50 (FOUNDATION DRAIN)
IE 6" PVC E=255.90 (ROOF DRAIN)
SURGE VALVE DISCHARGE SEE DET 4, SHT C-8

(6) N629860.83, E78428.59
1-TYPE 1 CB
RIM=258.16
IE 12" DI N=255.32
IE 12" DI E=255.32

NO.	DATE	BY	REVISION
1	2/5/2024	SWW	ADDENDUM 1

NOTICE
0 ½ 1
IF THIS BAR DOES NOT MEASURE 1" THEN DRAWING IS NOT TO SCALE

TMH DESIGNED
BAW DRAWN
NCR CHECKED

NATHAN C. ROSLAND · STATE OF WASHINGTON · 55144 · REGISTERED PROFESSIONAL ENGINEER · 2-6-2024

consor

Shaping our community together
CITY OF LACEY

CITY OF LACEY, WASHINGTON
MADRONA pH TREATMENT PROJECT
LACEY CONTRACT #PW 2022-37

SITE GRADING, PAVING & DRAINAGE PLAN

PROJECT NO.: 21-3028 | SCALE: AS SHOWN | DATE: JANUARY 2024

SCHEDULE A
SHEET
C-6

C:\Users\Sean.Walmsley\AppData\Local\Temp\AcPublish_26576\21-3028-WA-C.dwg C-6 2/1/2024 10:33 PM SEAN.WALMSLEY 23.0s (LMS Tech)

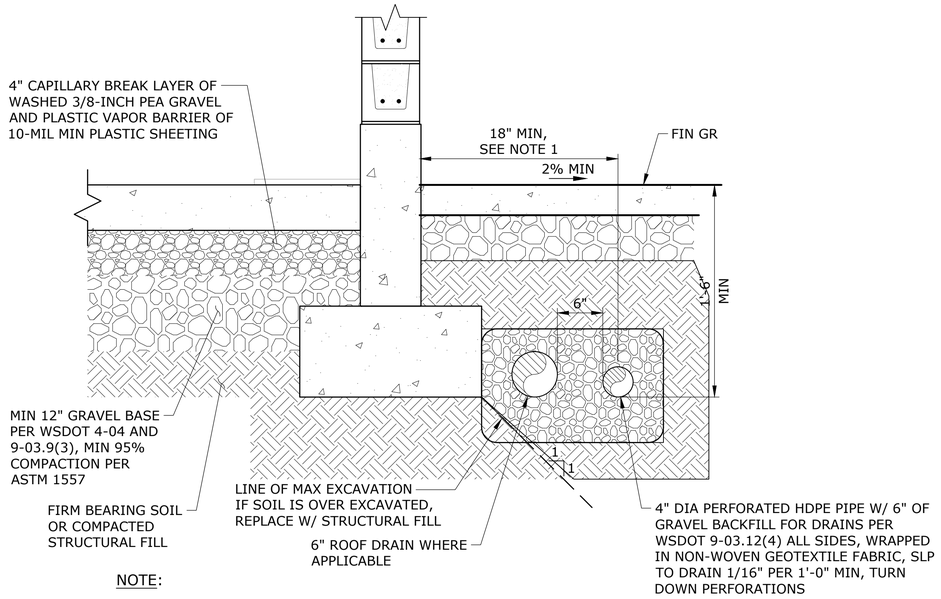

NOTE:

1. DISTANCE FROM OUTER WALL TO CENTERLINE OF 4" FOUNDATION DRAIN MAY BE REDUCED TO 12" WHEN NOT IN SAME TRENCH AS ROOF DRAIN.

TYPICAL FOUNDATION DRAIN (1 / C-6)

SCALE: NTS

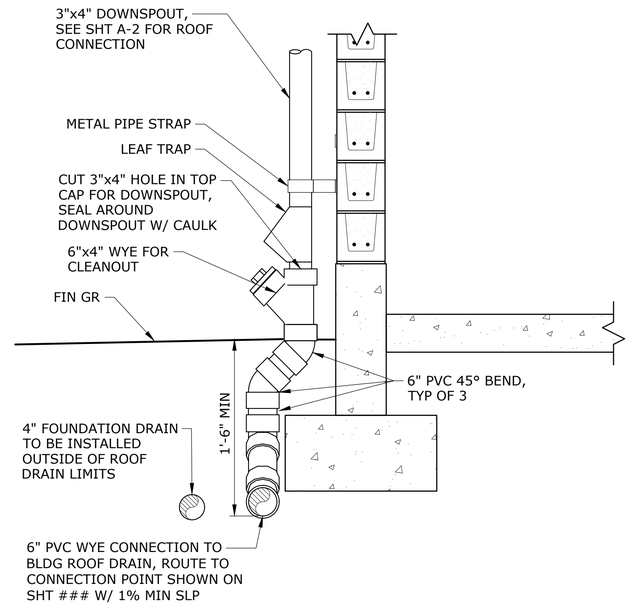

ROOF DRAIN CONNECTION (2 / C-6)

SCALE: NTS

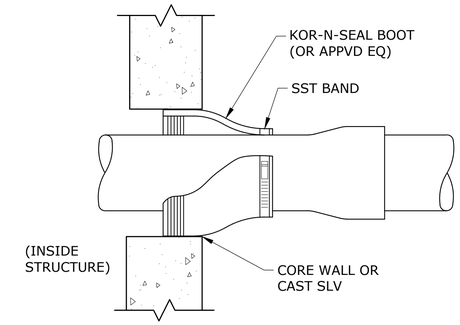

NOTE:

1. CONTRACTOR SHALL CORE-DRILL WALL OF EXISTING STRUCTURES.

PIPE TO STRUCTURE FLEXIBLE CONNECTOR DETAIL (3 / -)

SCALE: NTS

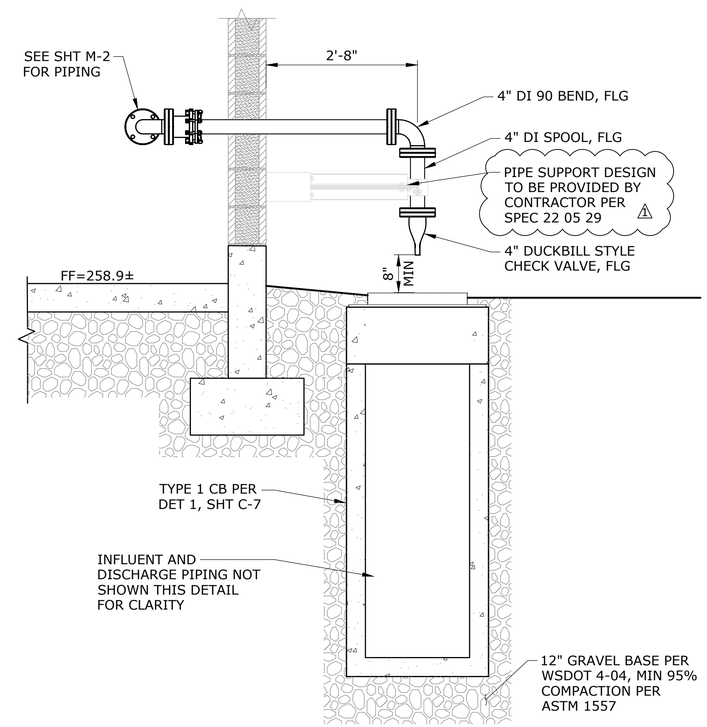

SURGE VALVE DISCHARGE TO STORM DETAIL (4 / C-6)

SURGE VALVE DISCHARGE SCALE: 3/4"=1'-0"

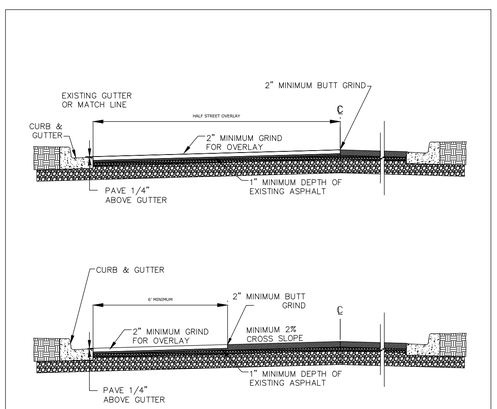

GENERAL NOTES:
1. GRINDING SHALL BE DONE PER WSDOT SPECIFICATIONS.
2. IDENTIFY AND PROTECT ALL LOOP AND LOOP LEAD-INS DURING GRINDING.
3. ALL PAVEMENT MARKINGS SHALL BE REMOVED PRIOR TO PAVING.
4. ALL INDUCTION LOOPS SHALL BE INSTALLED PRIOR TO FINAL OVERLAY.
5. ALL JOINTS SHALL BE SEALED WITH PG 64-22.

CITY OF LACEY, WASHINGTON DEPT. OF PUBLIC WORKS			
HALF STREET GRIND & OVERLAY			
APPROVED CITY ENGINEER			DWG. NO. 4-8.7
DES. WHO	DWN. WHO	CKD. RAS	DATE 12/15/2014

DG4-8.7.DWG

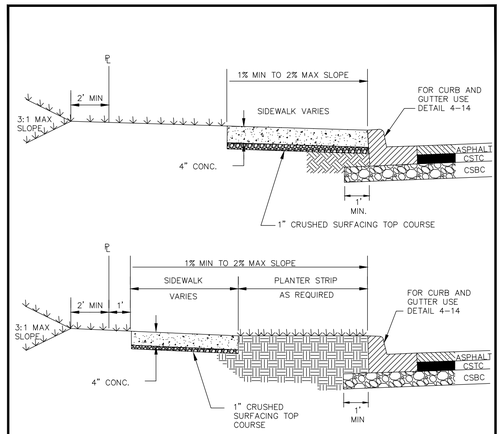

NTS

GENERAL NOTES:
1. FORMS SHALL BE WOOD OR METAL AND SHALL EXTEND FOR THE FULL DEPTH OF THE CONCRETE, SEE SECTION 8-14.3(2).
2. ALL FORMS SHALL BE STRAIGHT, FREE FROM WARP, AND OF SUFFICIENT STRENGTH TO RESIST THE PRESSURE OF THE CONCRETE WITHOUT SPRING.
3. FOR JOINTS AND SCORING SEE DETAIL 4-10.
4. CONCRETE DRIVEWAYS REQUIRE A MINIMUM DEPTH OF 6".
5. SEE ROADWAY SECTIONS FOR STREET TREE LOCATIONS.
6. THE TOP OR TOE OF ALL SLOPES SHALL BEGIN 2' BACK OF THE SIDEWALK OR THE RIGHT-OF-WAY LINE.
7. WHEN APPLICABLE THE RIGHT-OF-WAY LINE SHALL BE 1' BEHIND THE SIDEWALK.

CITY OF LACEY, WASHINGTON DEPT. OF PUBLIC WORKS			
SIDEWALK			
APPROVED CITY ENGINEER			DWG. NO. 4-9
DES. WHO	DWN. WHO	CKD. RAS	DATE 12/15/2014

DG4-9.DWG

TYPE I

GENERAL NOTES:
1. EXPANSION JOINT MATERIAL TO BE 3/8" THICK PREMOLDED. JOINT FILLER FULL THICKNESS OF CONCRETE SPACING.
2. FORM AND SUBGRADE INSPECTION REQUIRED BEFORE POURING CONCRETE.
3. TYPE I USED ON OUTSIDE LANES.
4. TYPE II USED IN REVERSE SLOPE AREAS.
5. SEE 4B.025 FOR SPECIFICATIONS FOR CURBS AT MEDIANS.

CITY OF LACEY, WASHINGTON DEPT. OF PUBLIC WORKS			
CEMENT CONCRETE CURB & GUTTER			
APPROVED CITY ENGINEER			DWG. NO. 4-14
DES. WHO	DWN. WHO	CKD. MAH	DATE 12/15/2014

DG4-14.DWG

NO.	DATE	BY	REVISION
1	2/6/2024	SWW	ADDENDUM 1

NOTICE
0 ½ 1
IF THIS BAR DOES NOT MEASURE 1" THEN DRAWING IS NOT TO SCALE

TMH DESIGNED
BAW DRAWN
NCR CHECKED

SEAN HANG ROSWELL, STATE OF WASHINGTON, 55144, REGISTERED PROFESSIONAL ENGINEER, 2-6-2024

consor

Shaping our community together
CITY OF LACEY

CITY OF LACEY, WASHINGTON
MADRONA pH TREATMENT PROJECT
LACEY CONTRACT #PW 2022-37

GRADING, PAVING & DRAINAGE DETAILS - 1

PROJECT NO.: 21-3028 | SCALE: AS SHOWN | DATE: JANUARY 2024

SCHEDULE A
SHEET C-8

C:\Users\Sean.Walmsley\AppData\Local\Temp\AcPublish_12044\21-3028-WA-D2.dwg C-8 2/2/2024 9:24 AM SEAN.WALMSLEY 23.0s (LMS Tech)

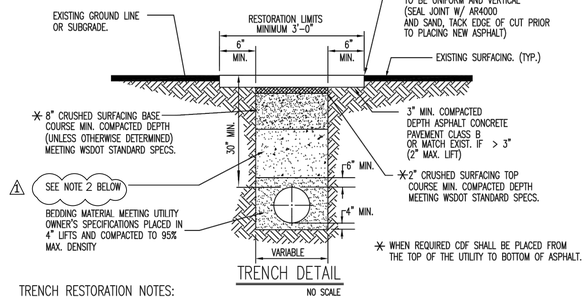

TRENCH DETAIL

NO SCALE

TRENCH RESTORATION NOTES:

1. ALL ROADWAY CROSSINGS SHALL BE PUSHED UNLESS DETERMINED BY THE COUNTY ENGINEER THAT PUSHING CANNOT BE ACHIEVED.
2. BACKFILL SHALL BE IN ACCORDANCE WITH ONE OF THE FOLLOWING:
   A. CONTROLLED DENSITY BACKFILL, CDF (REQUIRED FOR ALL ARTERIAL/COLLECTOR CROSSINGS).
   B. SELECT BACKFILL MEETING THE REQUIREMENTS OF THE CRUSHED SURFACING BASED COURSE STD. SPEC. COMPACTED TO 95% DENSITY AND PLACED IN A MAXIMUM 12" LIFTS. WRITTEN VERIFICATION OF COMPACTION, BASED UPON ACCEPTABLE TESTING METHODS, AND PLACEMENT OF THE BACKFILL WILL BE REQUIRED.
   C. NOT USED
   D. ~~UNPAVED TRENCHING - NATIVE MATERIAL MAY BE USED AS BACKFILL MATERIAL AS LONG AS IT IS FREE OF WSDOT WASTE, DEBRIS,~~ CLODS, LARGE ROCKS (6"+) AND CAN BE PLACED AS SPECIFIED IN ITEM B ABOVE.
3. ALL PATCHES SHALL BE ROLLER COMPACTED. STEEL WHEEL ROLLERS SHALL BE NO WIDER THAN TRENCH PATCH WIDTH.
4. ALL LONGITUDINAL CUTS WITHIN THE PAVEMENT SHALL REQUIRE A HALF ROAD 0.17' GRIND AND OVERLAY. RESTORATION LIMITS SHALL BE AT THE COUNTY INSPECTOR'S DISCRETION. IF 0.17' OF EXISTING PAVEMENT DOES NOT EXIST, ONE OF THE FOLLOWING IS REQUIRED:
   A. FULL ROAD 0.17' OVERLAY; OR
   B. HALF ROAD REMOVAL OF EXISTING PAVEMENT AND REPLACE WITH 0.17' PAVEMENT AS LONG AS THE UNDERLYING STRUCTURAL SECTION OF THE ROAD MEETS CURRENT SPECIFICATIONS.
5. UNPAVED TRENCHING SHALL BE RESTORED TO EQUAL OF BETTER OF THE PRE-EXISTING CONDITION.

D:\DESIGN\Engineering\Manuals, Standards, Guidelines\Road Standards Drawings\ROADSTDS

LAST REVISED	12/2019

THURSTON COUNTY
WASHINGTON
SINCE 1852

THURSTON COUNTY PUBLIC WORKS

DEVELOPMENT REVIEW

ROADWAY STANDARDS

UTILITY TRENCH DETAIL

APPENDIX 12 – A

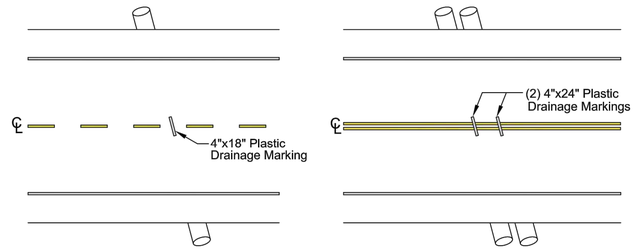

CULVERT DRAINAGE MARKING DETAIL

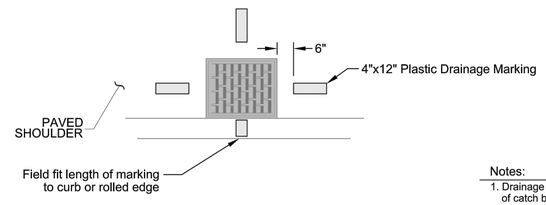

CATCH BASIN DRAINAGE MARKING DETAIL

Notes:
1. Drainage Markings are required on the sides of catch basins and manholes where pipe is present
2. Plastic Material must meet requirements of WSDOT Standard Specifications section 9-34.3

THURSTON COUNTY
STORM AND SURFACE WATER UTILITY
929 Lakeridge Dr SW BLDG 4 RM 100
OLYMPIA, WA 98502 (360) 754-4681

Designed: MC/RL
Drafted: SB
Checked: MC/RL
Scale: NTS

THURSTON COUNTY MARKING STANDARDS

PLASTIC DRAINAGE MARKING DETAILS

Sheet 1 of 1

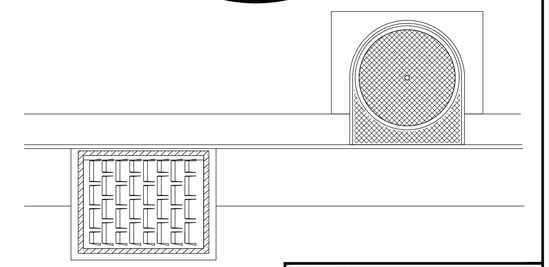

GENERAL NOTES:

1. ALL DECALS SHALL BE DAS #4.0 TUM-FW MANUFACTURER SPECIFIC.
2. DECALS AND DAS CURB MARKER ADHESIVE (#RS-222) SHALL BE PURCHASED AND AFFIXED BY THE CONTRACTOR/DEVELOPER.
3. DECALS SHALL BE ADHERED TO CLEAN, DRY CONCRETE (EXCLUSIVELY WITH SPECIFIED ADHESIVE) A MINIMUM OF 1" FROM EDGE OF CURB.
4. FINISHED PRODUCT SHALL BE INSPECTED AS PART OF THE CITY'S FINAL WALK THROUGH PROCESS.

DG5-1.DWG

CITY OF LACEY, WASHINGTON
DEPT. OF PUBLIC WORKS

CATCH BASIN
ANTI-DUMP MESSAGE

APPROVED — CITY ENGINEER — DWG. NO. 5-1

DES.	DWN.	CKD.	DATE
COL	WHO	TW	08/24/2017

NO.	DATE	BY	REVISION
1	2/6/2024	SWW	ADDENDUM 1

NOTICE
0 ½ 1
IF THIS BAR DOES NOT MEASURE 1" THEN DRAWING IS NOT TO SCALE

TMH DESIGNED
BAW DRAWN
NCR CHECKED

NATHAN C. ROSLAND — STATE OF WASHINGTON — 55144 — REGISTERED PROFESSIONAL ENGINEER — 2-6-2024

consor

Shaping our community together
CITY OF LACEY

CITY OF LACEY, WASHINGTON
MADRONA pH TREATMENT PROJECT
LACEY CONTRACT #PW 2022-37

GRADING, PAVING & DRAINAGE DETAILS - 2

PROJECT NO.: 21-3028 | SCALE: AS SHOWN | DATE: JANUARY 2024

SCHEDULE A
SHEET
C-8A

C:\Users\Sean.Walmsley\AppData\Local\Temp\AcPublish_12044\21-3028-WA-D2.dwg C-8A 2/2/2024 9:24 AM SEAN.WALMSLEY 23.0s (LMS Tech)

SECTION: 32 TOWNSHIP: 18N RANGE: 1W

LEGEND

ABANDON

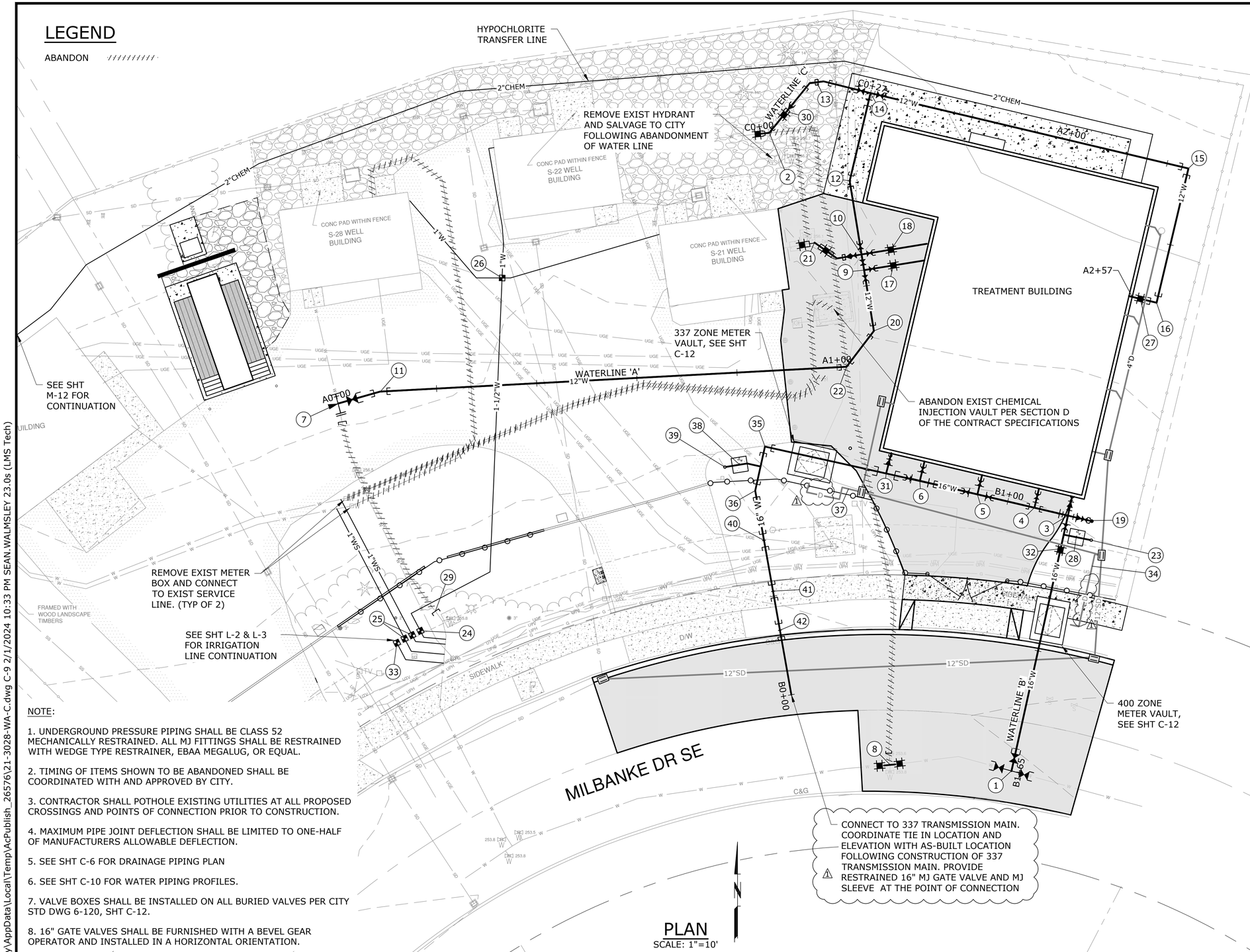

PLAN

SCALE: 1"=10'

NOTE:

1. UNDERGROUND PRESSURE PIPING SHALL BE CLASS 52 MECHANICALLY RESTRAINED. ALL MJ FITTINGS SHALL BE RESTRAINED WITH WEDGE TYPE RESTRAINER, EBAA MEGALUG, OR EQUAL.

2. TIMING OF ITEMS SHOWN TO BE ABANDONED SHALL BE COORDINATED WITH AND APPROVED BY CITY.

3. CONTRACTOR SHALL POTHOLE EXISTING UTILITIES AT ALL PROPOSED CROSSINGS AND POINTS OF CONNECTION PRIOR TO CONSTRUCTION.

4. MAXIMUM PIPE JOINT DEFLECTION SHALL BE LIMITED TO ONE-HALF OF MANUFACTURERS ALLOWABLE DEFLECTION.

5. SEE SHT C-6 FOR DRAINAGE PIPING PLAN

6. SEE SHT C-10 FOR WATER PIPING PROFILES.

7. VALVE BOXES SHALL BE INSTALLED ON ALL BURIED VALVES PER CITY STD DWG 6-120, SHT C-12.

8. 16" GATE VALVES SHALL BE FURNISHED WITH A BEVEL GEAR OPERATOR AND INSTALLED IN A HORIZONTAL ORIENTATION.

WATER PIPING SCHEDULE:

1. N629805.20, E78458.50
1-16" DI TEE, FLG
1-16" GATE VALVE, FLGxMJ
2-16" GATE VALVE, FLG
2-16" FLG COUPLING ADAPTER
CONNECT TO EXIST PER DET 1, SHT C-13

2. N629932.49, E78410.18
1-10" DI 45° BEND, MJ
1-10" DI LONG BODY SLV, MJ
CONNECT TO EXIST PER DET 3 SHT C-13

3. N629856.14, E78469.77
1-16" DI CROSS, FLG
2-16"x6" RDCR, FLG
1-16" DI GATE VALVE, FLGxMJ
2- 6" DI GATE VALVE, FLGxMJ
1-16" ADAPTER, FLGxMJ

4. N629857.71, E78463.06
1-16"x12" DI TEE, FLGxMJ
1-12" DI GATE VALVE, MJxFLG

5. N629860.35, E78451.71
1-16"x12" DI TEE, FLG
2-16" DI GATE VALVE, FLGxMJ
1-12" DI GATE VALVE, FLGxMJ

6. N629863.08, E78440.23
1-16"x12" DI TEE, FLG
1-12" DI GATE VALVE, FLGxMJ
1-16" DI GATE VALVE, FLGXMJ
1-16" ADAPTER, FLGxMJ

7. N629878.49, E78324.18
1-16"x12" DI TEE, FLG
1-16" DI BLIND FLANGE
1-16" FLANGE COUPLING ADAPTER
1-12" DI GATE VALVE, FLGxMJ
1-16" DI CAP, MJ
CONNECT TO EXIST PER DET 2, SHT C-13

8. N629806.39, E78434.28
2-16" DI LONG BODY SLV, MJ
1-16" SPOOL, LTF
1-16" CAP, MJ

9. N629905.10, E78429.10
1-12" DI TEE, FLG
2-12" DI GATE VALVE, FLGxMJ

10. N629908.23, E78428.59
1-12" DI CROSS, FLG
2-12" DI GATE VALVE, FLGxMJ
2-12" DI GATE VALVE, FLG
1-12"x10" DI RDCR, FLGxMJ
1-12" DI 45° BEND, MJ

11. N629880.88, E78332.56
1-12" 11.25° BEND, MJ

12. N629922.91, E78410.23
1-12" DI 22.5° BEND, MJ

13. N629942.58, E78419.64
1-12" DI 45° BEND, MJ
1-12" DI 22.5° BEND, MJ

14. N629940.41, E78430.39
1-12" DI TEE, FLG
2-12" DI GATE VALVE, FLGxMJ
1-12" ADAPTER, FLGxMJ

15. N629925.37, E78493.80
1-12" DI 90° BEND, MJ

16. N629898.59, E78487.45
1-12" DI 90° BEND, MJ

17. N629906.04, E78434.94
1-12" DI LONG BODY SLV, MJ

18. N629909.18, E78434.44
1-12" DI LONG BODY SLV, MJ

19. N629855.14, E78474.03
1-6" FIRE HYDRANT ASSEMBLY
PER CITY STD DWG 6-8, SHT C-11

20. N629892.97, E78431.05
1-12" DI 45° BEND, MJ, ROLLED

21. N629910.60, E78419.21
1-10" LONG BODY SLV, MJ
2-10" DI 45° BEND, MJ
CONNECT TO EXIST PER DET 4, SHT C-13

22. N629885.83, E78425.61
1-12" 45° BEND, MJ, ROLLED

23. N629851.22, E78474.41
1-WATER QUALITY SAMPLING STATION PER CITY DWG 6-17.0, SHT C-12

24. N629833.14, E78340.60
1 - 1 1/2" METER SERVICE W/ VALVE BOX PER CITY STD DWG 6-3, SHT C-11

25. N629831.94, E78338.21
2 - 1" SINGLE METER SERVICE W/ VALVE BOX PER CITY STD DWG 6-1.1, SHT C-11

26. N629903.54, E78357.32
1 - WELL HOUSE SERVICE MANIFOLD W/ VALVE BOX PER DET 2, SHT C-12

27. N629899.37, E78484.21
1-12" DI LONG BODY SLV, MJ

28. N629851.83, E78471.44
1-VALVE BOX PER CITY STD DWG 6-12.0, SHT C-12

29. N629836.91, E78343.67
1-16" DI CAP, MJ

30. N629936.72, E78413.63
1-10" DI LONG BODY SLV, MJ
1-12"x10" DI RED, MJ

31. N629864.56, E78433.50
1-16"x6" TEE, MJxFLG
1-6"x4" REDUCER, FLG
1-4" GATE VALVE, MJxFLG

32. N629849.34, E78468.27
1-16" LONG BODY SLV, MJ

33. N629830.76, E78335.91
1 - 1 1/2" METER SERVICE W/ VALVE BOX PER CITY STD DWG 6-3, SHT C-11

34. 1 - SUMP DRAIN DISCHARGE PER DET 3, SHT C-12

35. N629869.90, E78409.33
1-16" 90° BEND, MJ, ROLLED

36. N629861.12, E78407.39
1-16" 22.5° BEND, MJ, ROLLED

37. 1-SUMP DRAIN DISCHARGE PER DET 3, SHT C-12

38. N629866.28, E78404.29
1-VALVE BOX PER CITY STD DWG 6-12.0, SHT C-12

39. N629865.82, E78401.33
1-WATER QUALITY SAMPLING STATION PER CITY DWG 6-17.0, SHT C-12

40. N629851.19, E78409.14
1-16" 11.25 DEG VERT BEND, MJ

41. N629841.08, E78410.94
1-16" 11.25 DEG VERT BEND, MJ

42. N629833.20, E78412.33
1-16" 11.25 DEG VERT BEND, MJ

NO.	DATE	BY	REVISION
1	2/1/2024	SWW	REVISED VAULT DRAIN LINE LABEL

NOTICE
0 ½ 1
IF THIS BAR DOES NOT MEASURE 1" THEN DRAWING IS NOT TO SCALE

TMH DESIGNED
BAW DRAWN
NCR CHECKED

SEAN HANG WALMSLEY, STATE OF WASHINGTON, 55144, REGISTERED PROFESSIONAL ENGINEER, 2-6-2024

consor

Shaping our community together
CITY OF LACEY

CITY OF LACEY, WASHINGTON
MADRONA pH TREATMENT PROJECT
LACEY CONTRACT #PW 2022-37

SITE PIPING PLAN

PROJECT NO.: 21-3028 | SCALE: AS SHOWN | DATE: JANUARY 2024

SCHEDULE A
SHEET
C-9

C:\Users\Sean.Walmsley\AppData\Local\Temp\AcPublish_26576\21-3028-WA-C.dwg C-9 2/1/2024 10:33 PM SEAN.WALMSLEY 23.0s (LMS Tech)

SECTION: 32 TOWNSHIP: 18N RANGE: 1W

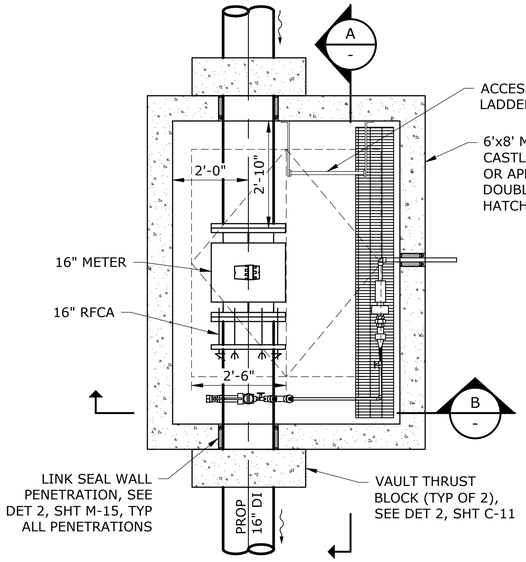

METER VAULT (1 / C-9)

SCALE: 1/2"=1'

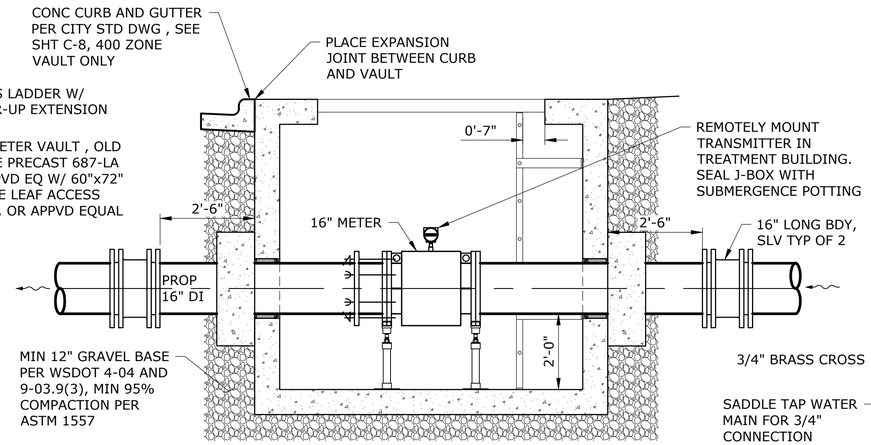

NOTES:

1. SUMP DRAIN NOT SHOWN THIS VIEW FOR CLARITY.

METER VAULT SECTION - 'A'

SCALE: 1/2"=1'

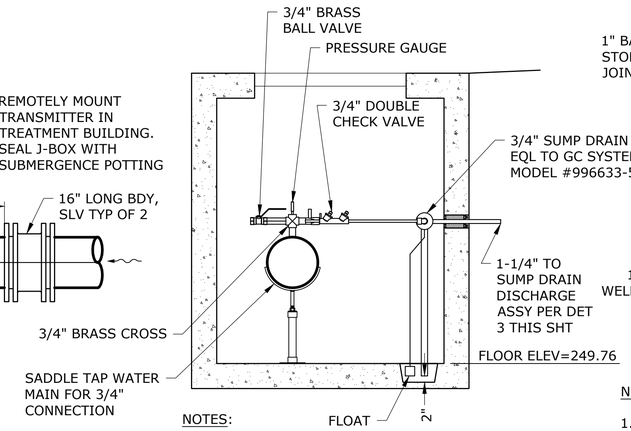

NOTES:

1. SUMP DISCHARGE PIPE TO BE BRASS OR COPPER UNLESS OTHERWISE NOTED
2. SEE SHT C-8 FOR BLOWOFF LOCATION
3. LADDER NOT SHOWN THIS VIEW FOR CLARITY

METER VAULT SECTION - 'B'

SCALE: 1/2"=1'

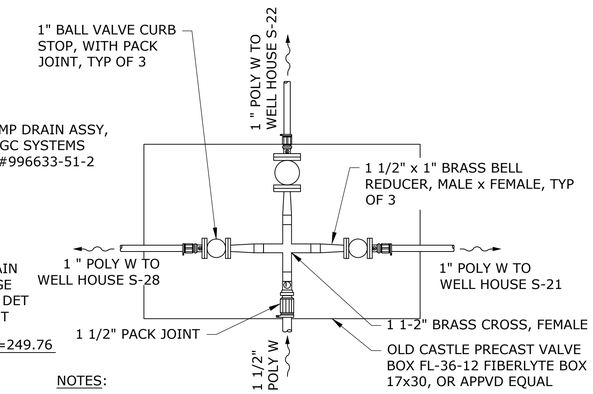

NOTES:

1. WATER SERVICE LINES SHALL COMPLY WITH SECTION 6.120C OF THE CITY DEVELOPMENT GUIDELINES

2. BALL VALVE CORPORATION STOP: FORD FB-1101-6G-NL, MUELLER E25029N, AY-McDONALD 74704B-33-1-1/2"

WELL HOUSE MANIFOLD (2 / C-9)

SCALE: NTS

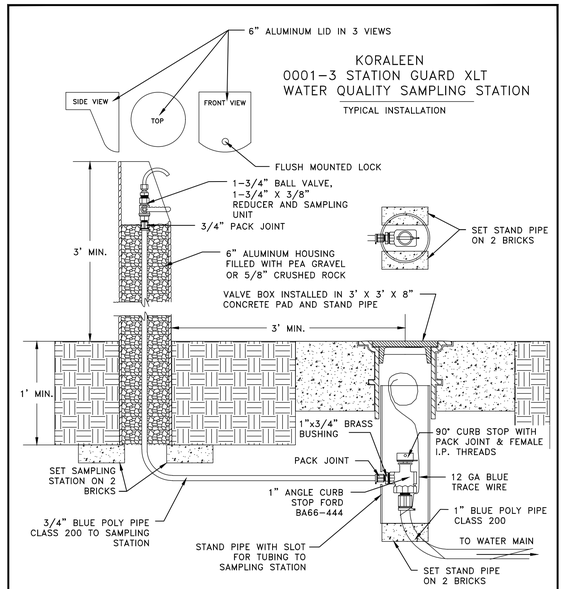

GENERAL NOTES:

1. THE KORALEEN SAMPLING STATION SHALL BE INSTALLED BEHIND THE SIDEWALK WITHIN 1 FOOT OF THE PROPERTY LINE AND WHEN POSSIBLE IN A OPEN SPACE. THE VALVE BOX SHALL BE INSTALLED IN THE PLANTER STRIP IN A CONCRETE PAD.
2. THE STAND PIPE SHALL REST ON TWO (2) BRICKS TO PROTECT THE WATER LINE FROM BEING CRUSHED.
3. A TRACER WIRE SHALL BE INSTALLED WITH THE WATER LINE.

DG6-17.0.DWG

CITY OF LACEY, WASHINGTON
DEPT. OF PUBLIC WORKS

KORALEEN SAMPLING STATION

APPROVED CITY ENGINEER			DWG. NO. 6-17.0
DES. WHO	DWN. WHO	CKD. RAS	DATE 08/24/2017

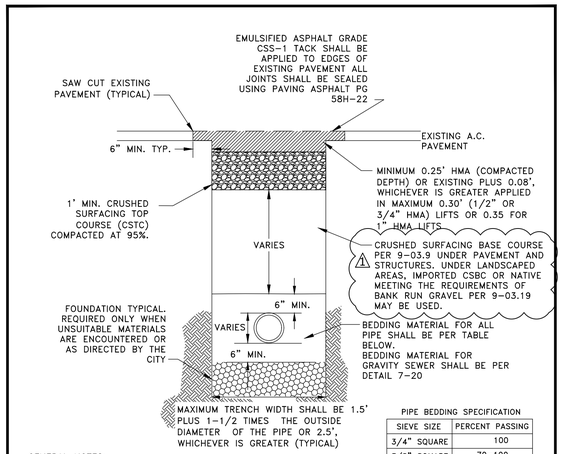

PIPE BEDDING SPECIFICATION

SIEVE SIZE	PERCENT PASSING
3/4" SQUARE	100
3/8" SQUARE	70-100
U.S. NO.4	55-100
U.S. NO. 10	35-95
U.S. NO. 20	20-80
U.S. NO. 40	10-55
U.S. NO. 100	0-10
U.S. NO. 200	0-03

GENERAL NOTES:

1. ALL MATERIALS EXCEPT H.M.A. SHALL BE COMPACTED IN 6-INCH MAXIMUM LIFTS TO 95% DENSITY AS DETERMINED BY ASTM D1557.
2. ALL MATERIALS, WORKMANSHIP, AND INSTALLATION SHALL BE IN CONFORMANCE WITH THE WSDOT STANDARD SPECIFICATIONS FOR ROAD, BRIDGE AND MUNICIPAL CONSTRUCTION AS AMENDED BY CITY OF LACEY STANDARDS.
3. KEEP TRENCH BOTTOM COMPACTED WITH UNIFORM GRADE. NO TEMPORARY SUPPORTS, I.E. BLOCKS, WILL BE ALLOWED TO SUPPORT PIPE. TRENCH BOTTOM SHALL BE TO GRADE PRIOR TO PIPE INSTALLATION.
4. SAW CUT PAVEMENT TO MAX. TRENCH WIDTH. BACKFILL AND PAVE TO TOP OF EXISTING PAVEMENT FOR TRENCH WIDTH. ALLOW 24 HOURS MINIMUM FOR TRENCH PATCH TO CURE. GRIND AND PAVE FINAL PATCH AS SHOWN.
5. DEVIATION FROM COMPACTION STANDARDS MAY BE APPROVED BY THE DIRECTOR, OR DESIGNEE, WHERE RECOMMENDED BY THE LICENSED PROFESSIONAL ENGINEER FOR PLANNED OR EXISTING INFILTRATION FACILITIES.
6. EXISTING SURFACES PAVED WITH PERMEABLE MATERIALS SHALL BE REPLACED IN-KIND WHERE FEASIBLE IN CONFORMANCE WITH 4B.180 TRENCH BACKFILL AND RESTORATION.

DG4-8.2.DWG

CITY OF LACEY, WASHINGTON
DEPT. OF PUBLIC WORKS

RESIDENTIAL TRENCH RESTORATION

APPROVED CITY ENGINEER			DWG. NO. 4-8.2
DES WHO	DWN WHO	CKD RAS	DATE 08/24/2017

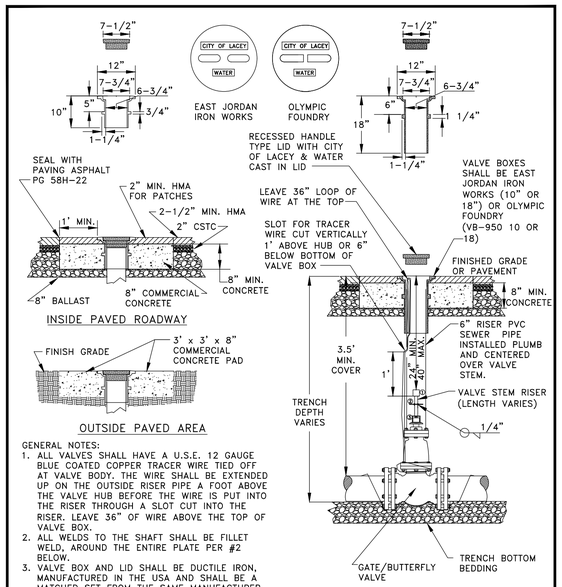

GENERAL NOTES:

1. ALL VALVES SHALL HAVE A U.S.E. 12 GAUGE BLUE COATED COPPER TRACER WIRE TIED OFF AT VALVE BODY. THE WIRE SHALL BE EXTENDED UP ON THE OUTSIDE RISER PIPE A FOOT ABOVE THE VALVE HUB BEFORE THE WIRE IS PUT INTO THE RISER THROUGH A SLOT CUT INTO THE RISER. LEAVE 36" OF WIRE ABOVE THE TOP OF VALVE BOX.
2. ALL WELDS TO THE SHAFT SHALL BE FILLET WELD, AROUND THE ENTIRE PLATE PER #2
3. VALVE BOX AND LID SHALL BE DUCTILE IRON, MANUFACTURED IN THE USA AND SHALL BE A MATCHED SET FROM THE SAME MANUFACTURER.
4. EXISTING SURFACES PAVED WITH PERMEABLE MATERIALS SHALL BE REPLACED IN-KIND WHERE FEASIBLE IN CONFORMANCE WITH 4B.180 TRENCH BACKFILL AND RESTORATION.

VALVE STEM EXTENSION LEGEND

① VALVE OPERATING NUT OR 1-7/8" X 1-7/8" X 2" HIGH GRADE STEEL WELDED TO GUIDE PLATE.
② 3/16" THICK X 5 1/5" DIA STEEL GUIDE PLATE WELDED TO RISER SHAFT.
③ 2"X2"X 3/16" SQUARE STRUCTURAL STEEL TUBING TO FIT OPERATING NUT. LENGTH AS REQUIRED.

DG6-12.0.DWG

CITY OF LACEY, WASHINGTON
DEPT. OF PUBLIC WORKS

STANDARD VALVE BOX INSTALLATION

APPROVED CITY ENGINEER			DWG. NO. 6-12.0
DES WHO	DWN WHO	CKD RAS	DATE 08/24/2017

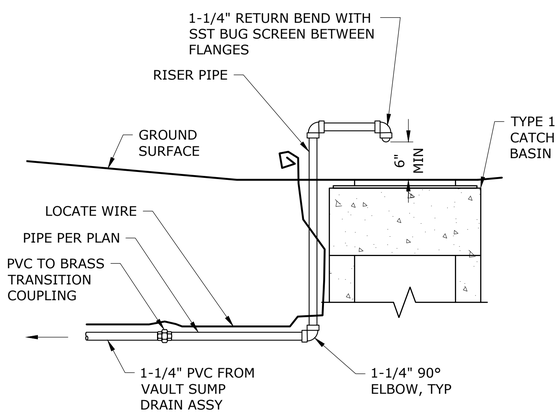

NOTES:

1. CONTRACTOR SHALL PROVIDE THRUST RESTRAINT AS REQUIRED.
2. ABOVE GRADE SUMP DRAIN DISCHARGE PIPE SHALL BE BRASS.

SUMP DRAIN DISCHARGE (3 / C-9)

SCALE: NTS

NO.	DATE	BY	REVISION
1	2/1/2024	SWW	ADDENDUM 1

NOTICE

0 ½ 1

IF THIS BAR DOES NOT MEASURE 1" THEN DRAWING IS NOT TO SCALE

TMH DESIGNED
BAW DRAWN
NCR CHECKED

NATHANC. ROSLAND STATE OF WASHINGTON 35144 REGISTERED PROFESSIONAL ENGINEER 2-6-2024

consor

Shaping our community together
CITY OF LACEY

CITY OF LACEY, WASHINGTON MADRONA pH TREATMENT PROJECT LACEY CONTRACT #PW 2022-37

SITE PIPING DETAILS - 2

SCHEDULE A
SHEET C-12

PROJECT NO.: 21-3028 | SCALE: AS SHOWN | DATE: JANUARY 2024

K:\TAC_Projects\21\3028 - Lacey - Madrona PH Treatment\CAD\Sheets\21-3028-WA-C1.dwg C-12 2/6/2024 10:28 AM SEAN.WALMSLEY 23.0s (LMS Tech)

VALVE SCHEDULE

TAG NO.	TYPE	SIZE, INCHES	PRESSURE RATING	OPERATOR TYPE	SPECIFICATION
RV1	PRESSURE RELIEF VALVE	4	400 PSI	PASSIVE HYDRAULIC	40 05 23.74
RV2	PRESSURE RELIEF VALVE	4	400 PSI	PASSIVE HYDRAULIC	40 05 23.74
CHKV1	CHECK VALVE	12	150 PSI	PASSIVE HYDRAULIC	40 05 23.24
CHKV2	CHECK VALVE	12	150 PSI	PASSIVE HYDRAULIC	40 05 23.24
CHKV3	CHECK VALVE	12	150 PSI	PASSIVE HYDRAULIC	40 05 23.24
FCV21A	CONTROL VALVE	10	150 PSI	SOLENOID (SV-1A)	MODIFY EXISTING PER 40 05 23.73 1
FCV21B	CONTROL VALVE	6	150 PSI	SOLENOID	MODIFY EXISTING PER 40 05 23.73
FCV22A	CONTROL VALVE	10	150 PSI	SOLENOID (SV-1B)	MODIFY EXISTING PER 40 05 23.73
FCV22B	CONTROL VALVE	6	150 PSI	SOLENOID	MODIFY EXISTING PER 40 05 23.73
FCV28A	CONTROL VALVE	10	150 PSI	SOLENOID (SV-1C)	MODIFY EXISTING PER 40 05 23.73
FCV28B	CONTROL VALVE	6	150 PSI	SOLENOID	MODIFY EXISTING PER 40 05 23.73
GV1A	GATE	10	150 PSI	MANUAL, HANDWHEEL	40 05 23
GV1B	GATE	12	150 PSI	MANUAL, HANDWHEEL	40 05 23
GV1C	GATE	10	150 PSI	MANUAL, HANDWHEEL	40 05 23
GV2A	GATE	10	150 PSI	MANUAL, HANDWHEEL	40 05 23
GV2B	GATE	12	150 PSI	MANUAL, HANDWHEEL	40 05 23
GV2C	GATE	10	150 PSI	MANUAL, HANDWHEEL	40 05 23
GV3A	GATE	10	150 PSI	MANUAL, HANDWHEEL	40 05 23
GV3B	GATE	12	150 PSI	MANUAL, HANDWHEEL	40 05 23
GV3C	GATE	10	150 PSI	MANUAL, HANDWHEEL	40 05 23
GV4	GATE	4	150 PSI	MANUAL, HANDWHEEL	40 05 23
GV5	GATE	4	150 PSI	MANUAL, HANDWHEEL	40 05 23
SV-2A	RAW WATER ANALYZER WELL 1 (S21)	1/2	150 PSI	SOLENOID	40 05 23.72
SV-2B	RAW WATER ANALYZER WELL 2 (S22)	1/2	150 PSI	SOLENOID	40 05 23.72
SV-2C	RAW WATER ANALYZER WELL 3 (S28)	1/2	150 PSI	SOLENOID	40 05 23.72
BFV-1	BUTTERFLY VALVE	8	150 PSI	MANUAL, LEVER	40 05 23 / 46 51 15
BFV-2	BUTTERFLY VALVE	8	150 PSI	MANUAL, LEVER	40 05 23 / 46 51 15
BFV-3	BUTTERFLY VALVE	8	150 PSI	MANUAL, LEVER	40 05 23 / 46 51 15

HVAC SCHEDULE

TAG NO.	TYPE	LOCATION	RATED CAPACITY (BTU/HR)		SPECIFICATION
			HEATING	COOLING	
HP1	FLOOR MOUNT	OUTSIDE BUILDING	42000	36000	23 81 40
HP2	FLOOR MOUNT	OUTSIDE BUILDING	42000	36000	23 81 40
AH1	WALL MOUNT	TREATMENT ROOM	34000	30000	23 81 40
AH2	WALL MOUNT	HYPOCHLORITE ROOM	4500	4000	23 81 40
AH3	WALL MOUNT	BLOWER ROOM	9000	8000	23 81 40
AH4	WALL MOUNT	ELECTRICAL ROOM	34000	30000	23 81 40

PUMP SCHEDULE

TAG NO.	SERVICE	TYPE	SIZE	SPECIFICATION
P-1	POTABLE WATER	VERTICAL TURBINE	150 HP	43 21 39
P-2	POTABLE WATER	VERTICAL TURBINE	150 HP	43 21 39
P-3	POTABLE WATER	VERTICAL TURBINE	150 HP	43 21 39
P-4	POTABLE WATER	HORIZONTAL CENTRIFUGAL	125 HP	43 21 15
P-5	POTABLE WATER	HORIZONTAL CENTRIFUGAL	125 HP	43 21 15
P-6	POTABLE WATER	HORIZONTAL CENTRIFUGAL	125 HP	43 21 15
P-CL	CHLORINE	MAGNETIC DRIVE CENTRIFUGAL	1 HP	43 23 13.23
P-CL21	CHLORINE INJECTION	DIAPHRAGM / METERING	PER SPEC	46 33 42
P-CL22	CHLORINE INJECTION	DIAPHRAGM / METERING	PER SPEC	46 33 42
P-CL28	CHLORINE INJECTION	DIAPHRAGM / METERING	PER SPEC	46 33 42

LOUVER SCHEDULE

TAG NO.	SIZE	DESCRIPTION	SPECIFICATION	DAMPER	SPECIFICATION
L1/D1	32"x32"	TREATMENT ROOM INTAKE - ACCOUSTICAL	08 91 19	ELECTRIC	23 09 13
L2/D2	16"x16"	HYPOCHLORITE ROOM INTAKE - ACCOUSTICAL	08 91 19	ELECTRIC	23 09 13
L3/D3	28"x44"	BLOWER ROOM INTAKE - PENTHOUSE	08 91 19	ELECTRIC	23 09 13

FLOW METER SCHEDULE

TAG NO.	DESCRIPTION	LOCATION	TYPE	SIZE (INCHES)	PRESSURE RATING	SPECIFICATION
FIT400	400 ZONE FLOW METER	VAULT	MAG METER	16	150 PSI	40 71 13
FIT337	337 ZONE FLOW METER	VAULT	MAG METER	16	150 PSI	40 71 13
FIT21	SOURCE 21 FLOW METER	SOURCE 21 WELL BUILDING	MAG METER	10	150 PSI	40 71 13
FIT22	SOURCE 22 FLOW METER	SOURCE 22 WELL BUILDING	MAG METER	10	150 PSI	40 71 13
FIT28	SOURCE 28 FLOW METER	SOURCE 28 WELL BUILDING	MAG METER	10	150 PSI	40 71 13

BLOWER SCHEDULE

TAG NO.	TYPE	AIR FLOW (CFM)	SP, IN W.G.	BLOWER RPM	MOTOR			MFR & MODEL NO.	SPECIFICATION
					HP	VOLTS	PHASE		
B1	SINGLE STAGE CENTRIFUGAL	2000	59.5	3500	30	460	3	SPENCER TURBINE 2020SS	46 51 15
B2	SINGLE STAGE CENTRIFUGAL	2000	59.5	3500	30	460	3	SPENCER TURBINE 2020SS	46 51 15
B3	SINGLE STAGE CENTRIFUGAL	2000	59.5	3500	30	460	3	SPENCER TURBINE 2020SS	46 51 15

FAN SCHEDULE

TAG NO.	TYPE	AIR FLOW (CFM)	SP, IN W.G.	FAN RPM	MOTOR			MFR & MODEL NO.	SPECIFICATION
					HP	VOLTS	PHASE		
EF1/D4	ROOF MOUNT	1850	0.25	780	1/4	115	1	GREENHECK GB-160	23 34 00 / 23 09 13
EF2/D5	ROOF MOUNT	365	0.26	1050	1/30	115	1	GREENHECK G-095-E	23 34 00 / 23 09 13

NO.	DATE	BY	REVISION
1	2/6/2024	SWW	ADDENDUM 1

NOTICE
0 ½ 1
IF THIS BAR DOES NOT MEASURE 1" THEN DRAWING IS NOT TO SCALE

TMH DESIGNED
BAW DRAWN
NCR CHECKED

NATHAN C. ROSLAND STATE OF WASHINGTON 45144 REGISTERED PROFESSIONAL ENGINEER 2-6-2024

consor

Shaping our community together
CITY OF LACEY

CITY OF LACEY, WASHINGTON
MADRONA pH TREATMENT PROJECT
LACEY CONTRACT #PW 2022-37

MECHANICAL SCHEDULES

PROJECT NO.: 21-3028 | SCALE: AS SHOWN | DATE: JANUARY 2024

SCHEDULE A
SHEET
M-1

K:\TAC_Projects\21\3028 - Lacey - Madrona PH Treatment\CAD\Sheets\M-1 MECHANICAL SCHEDULES.dwg M-1 2/6/2024 12:28 PM SEAN.WALMSLEY 23.0s (LMS Tech)

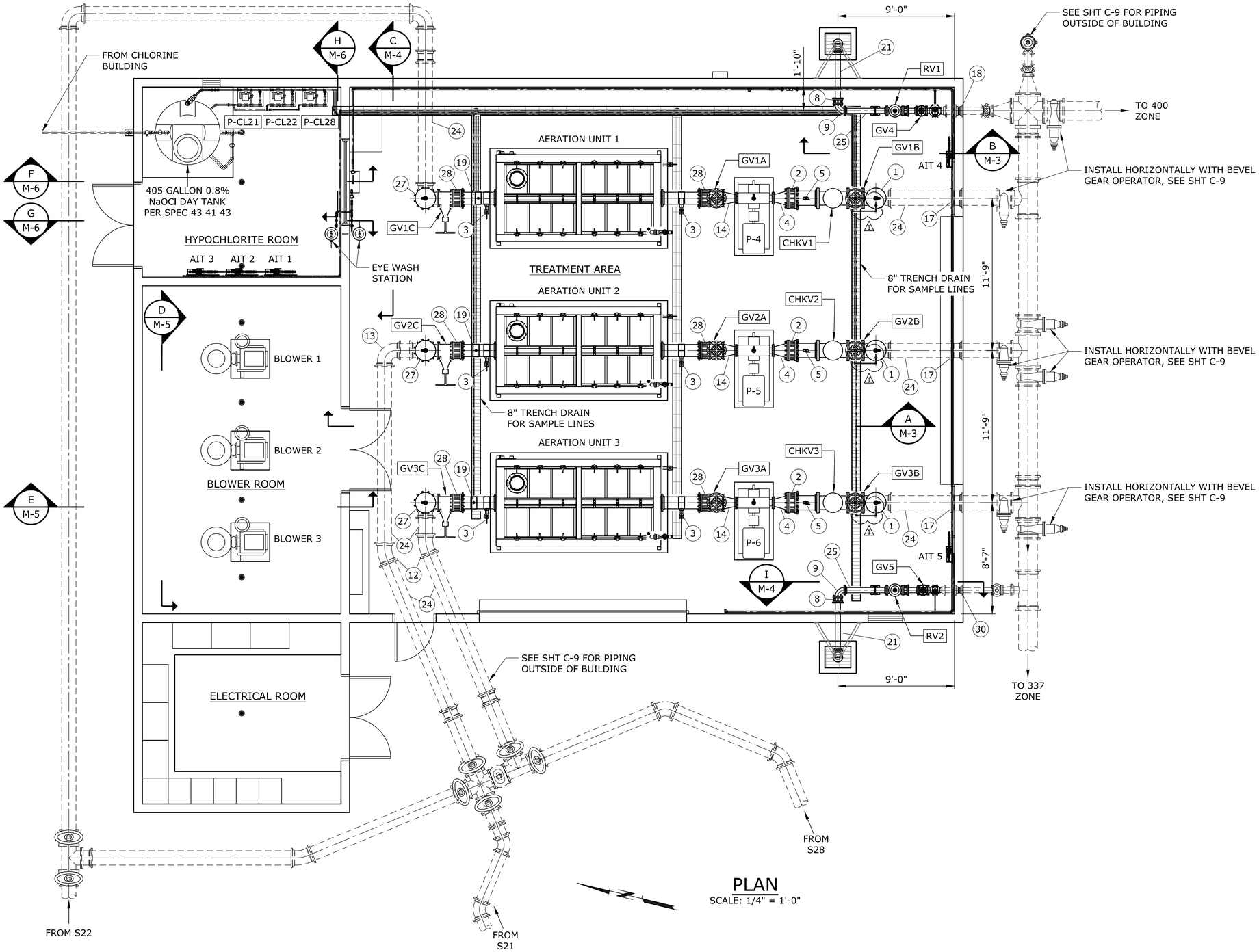

PLAN
SCALE: 1/4" = 1'-0"

GENERAL NOTE:

1. ALL METAL PIPING SHALL BE MECHANICALLY RESTRAINED UNLESS NOTED OTHERWISE.
2. VENT AND AIR LINES NOT SHOWN FOR CLARITY, SEE SHT M-5, M-8, AND A-5 FOR ROUTING DETAILS.

FITTING LIST:

1. 12" DI TEE, FLGxFLG
2. 12" RFCA
3. 2" FLUSHING CONNECTION, SEE DET 4, SHT M-14
4. 12"x6" RDCR, FLG
5. PRESSURE GAUGE, SEE DET 1, SHT M-14
6. 6" RFCA
7. 6"x4" TEE, FLG x FLG
8. 4" RFCA
9. 4" 90° ELBOW
10. 1" AIR RELEASE VALVE, SEE DET 4, SHT M-13
11. PRESSURE INDICATING TRANSMITTER, SEE DET 3, SHT M-13
12. 12" 22.5° BEND, MJ, RESTR
13. 12" 90° BEND, MJ, RESTR
14. 10"x8" RDCR, FLG
15. 6" 90° BEND, MJ, RESTR
16. 12" SPOOL, FLGxPE
17. 12" LONG BODY SLEEVE, MJ, RESTR
18. 6" LONG BODY SLEEVE, MJ, RESTR
19. CHLORINE INJECTOR ASSY, SEE DET 1, SHT M-3
20. 12" BLIND FLANGE
21. 4" SPOOL, FLGxPE
22. 6" BLIND FLANGE
23. 12" RESTRAINED FLANGE ADAPTER, EBAA IRON MEGAFLANGE OR EQUAL
24. 12" SPOOL, PE
25. 4" SPOOL, FLG
26. 6" SPOOL, PE
27. 12"x10" DI TEE, FLGxFLG
28. 10" RFCA
29. 10" SPOOL, FLGxPE
30. 4" LONG BODY SLEEVE, MJ, RESTR
31. PUMP CASING VENT VALVE. PROVIDE TUBING TO ROUTE DISCHARGE VIA AIR GAP TO 1" DRAIN 3-INCHES ABOVE FINISH FLOOR. ROUTE 1" DRAIN TO NEAREST TRENCH DRAIN

* FITTING LIST INCLUDES FITTINGS SHOWN ON SHEETS M-2 & M-3

NO.	DATE	BY	REVISION
1	02/05/2024	SWW	ADDENDUM 1

NOTICE
0 ½ 1
IF THIS BAR DOES NOT MEASURE 1" THEN DRAWING IS NOT TO SCALE

TMH DESIGNED
JLC DRAWN
NCR CHECKED

NATHAN C. ROSTAD STATE OF WASHINGTON 55144 REGISTERED PROFESSIONAL ENGINEER 2-6-2024

consor

Shaping our community together
CITY OF LACEY

CITY OF LACEY, WASHINGTON
MADRONA pH TREATMENT PROJECT
LACEY CONTRACT #PW 2022-37

PUMP & PIPING FLOOR PLAN

PROJECT NO.: 21-3028 | SCALE: AS SHOWN | DATE: JANUARY 2024

SCHEDULE A
SHEET
M-2

K:\TAC_Projects\21\3028 - Lacey - Madrona PH Treatment\CAD\Sheets\M-2 FLOOR PLAN.dwg M-2 2/5/2024 4:19 PM JARED.CLOUD 23.0s (LMS Tech)

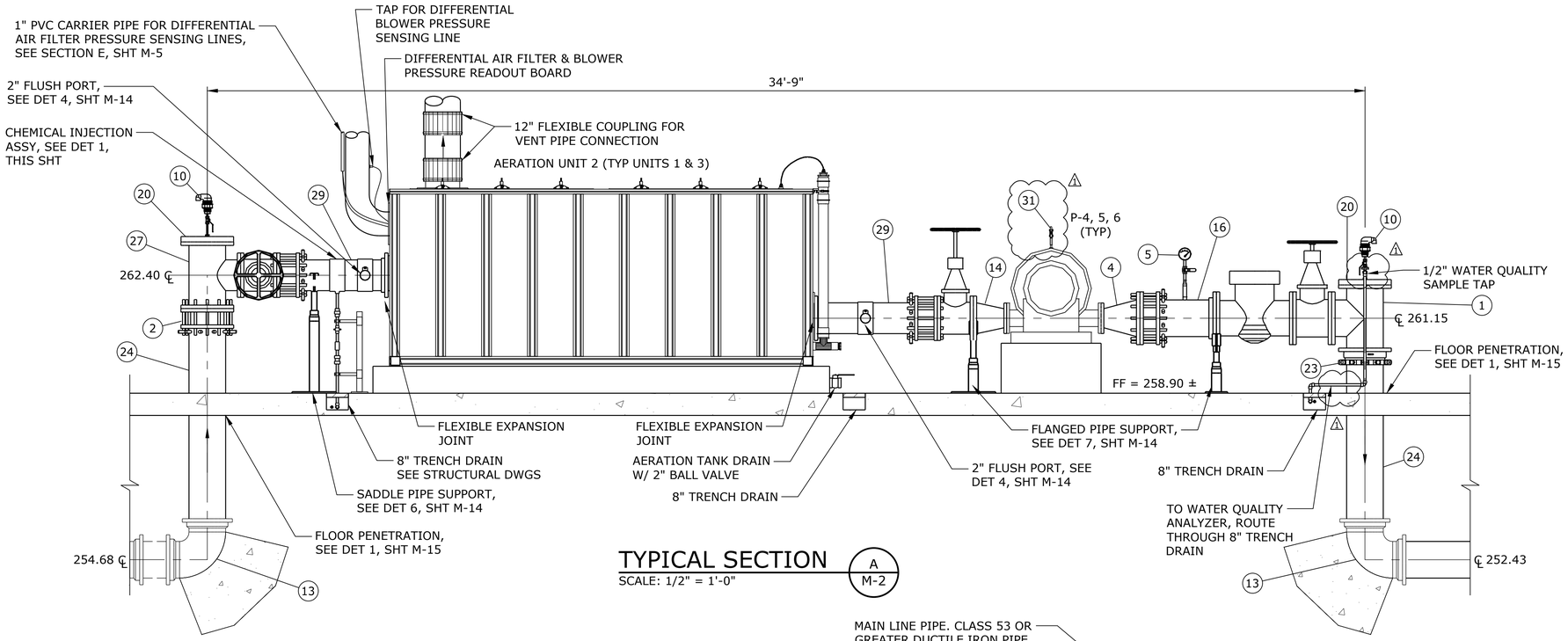

TYPICAL SECTION

SCALE: 1/2" = 1'-0"

A / M-2

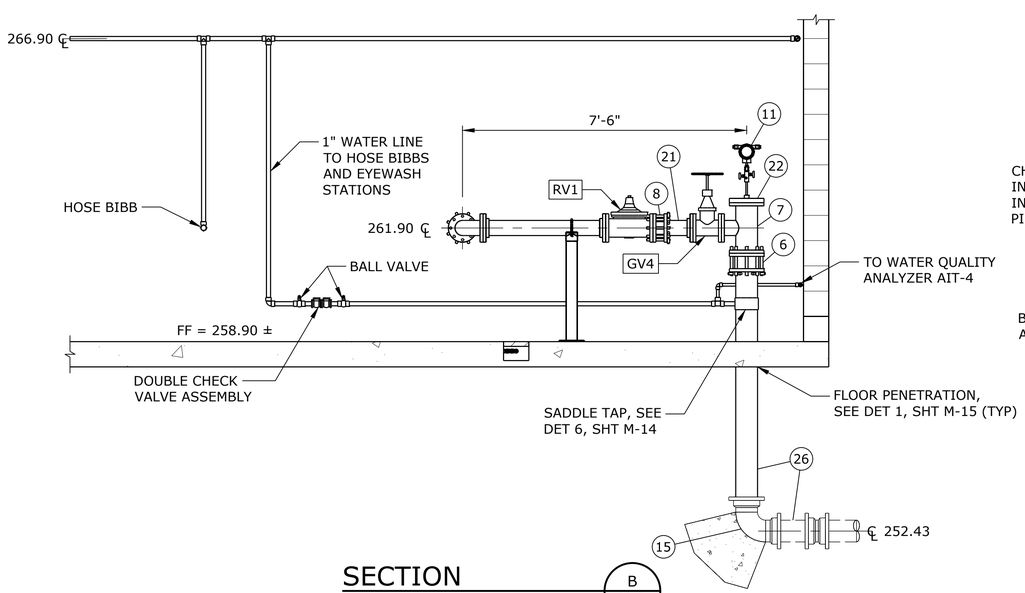

SECTION

SCALE: 1/2" = 1'-0"

B / M-2

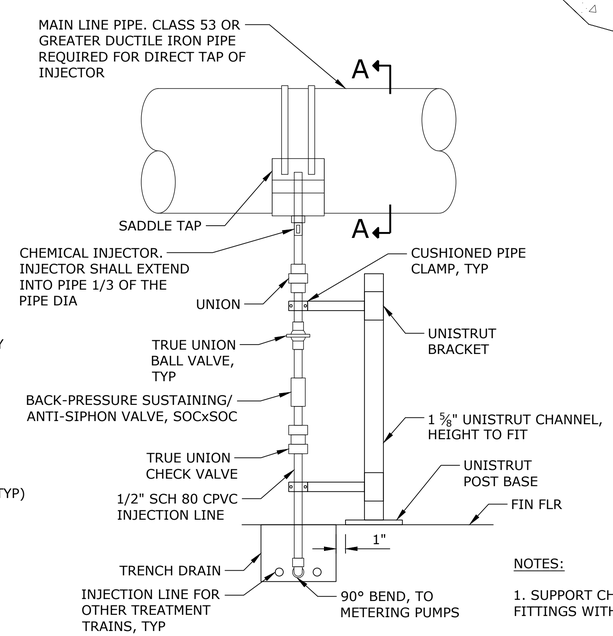

NOTES:

1. SUPPORT CHEMICAL INJECTION PIPE AND FITTINGS WITH UNISTRUT ATTACHED TO FLOOR.

CHEMICAL INJECTION ASSEMBLY

SCALE: NTS

1 / -

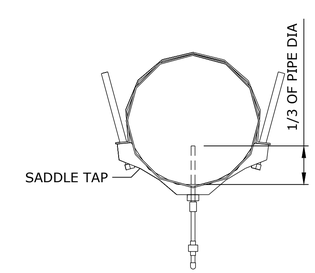

SECTION A-A

SCALE: NTS

NOTES:

1. SEE SHT M-5, M-8, AND A-5 FOR ROUTING OF AIR AND VENT LINES.

FITTING LIST:

1. 12" DI TEE, FLGxFLG
2. 12" RFCA
3. 2" FLUSHING CONNECTION, SEE DET 4, SHT M-14
4. 12"x6" RDCR, FLG
5. PRESSURE GAUGE, SEE DET 1, SHT M-14
6. 6" RFCA
7. 6"x4" TEE, FLG x FLG
8. 4" RFCA
9. 4" 90° ELBOW
10. 1" AIR RELEASE VALVE, SEE DET 4, SHT M-13
11. PRESSURE INDICATING TRANSMITTER, SEE DET 3, SHT M-13
12. 12" 22.5° BEND, MJ, RESTR
13. 12" 90° BEND, MJ, RESTR
14. 10"x8" RDCR, FLG
15. 6" 90° BEND, MJ, RESTR
16. 12" SPOOL, FLGxPE
17. 12" LONG BODY SLEEVE, MJ, RESTR
18. 6" LONG BODY SLEEVE, MJ, RESTR
19. CHLORINE INJECTOR ASSY, SEE DET 1, SHT M-3
20. 12" BLIND FLANGE
21. 4" SPOOL, FLGxPE
22. 6" BLIND FLANGE
23. 12" RESTRAINED FLANGE ADAPTER, EBAA IRON MEGAFLANGE OR EQUAL
24. 12" SPOOL, PE
25. 4" SPOOL, FLG
26. 6" SPOOL, PE
27. 12"x10" DI TEE, FLGxFLG
28. 10" RFCA
29. 10" SPOOL, FLGxPE
30. 4" LONG BODY SLEEVE, MJ, RESTR
31. PUMP CASING VENT VALVE. PROVIDE TUBING TO ROUTE DISCHARGE VIA AIR GAP TO 1" DRAIN 3-INCHES ABOVE FINISH FLOOR. ROUTE 1" DRAIN TO NEAREST TRENCH DRAIN

* FITTING LIST INCLUDES FITTINGS SHOWN ON SHEETS M-2 & M-3

NO.	DATE	BY	REVISION
1	02/05/2024	SWW	ADDENDUM 1

NOTICE
0 ½ 1
IF THIS BAR DOES NOT MEASURE 1" THEN DRAWING IS NOT TO SCALE

TMH DESIGNED
JLC DRAWN
NCR CHECKED

NATHAN C. ROSTAD, STATE OF WASHINGTON, 45144, REGISTERED PROFESSIONAL ENGINEER, 2-6-2024

consor

Shaping our community together
CITY OF LACEY

CITY OF LACEY, WASHINGTON MADRONA pH TREATMENT PROJECT LACEY CONTRACT #PW 2022-37

PUMP & PIPING SECTIONS - 1

PROJECT NO.: 21-3028 | SCALE: AS SHOWN | DATE: JANUARY 2024

SCHEDULE A
SHEET
M-3

K:\TAC_Projects\21\3028 - Lacey - Madrona PH Treatment\CAD\Sheets\M-3-6 SECTIONS.dwg M-3 2/5/2024 4:46 PM JARED.CLOUD 23.0s (LMS Tech)

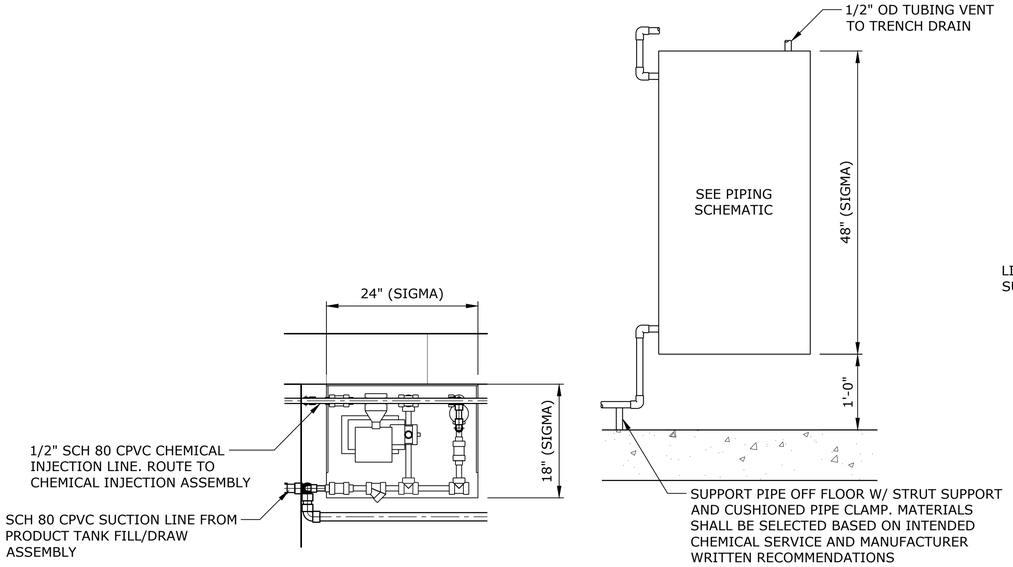

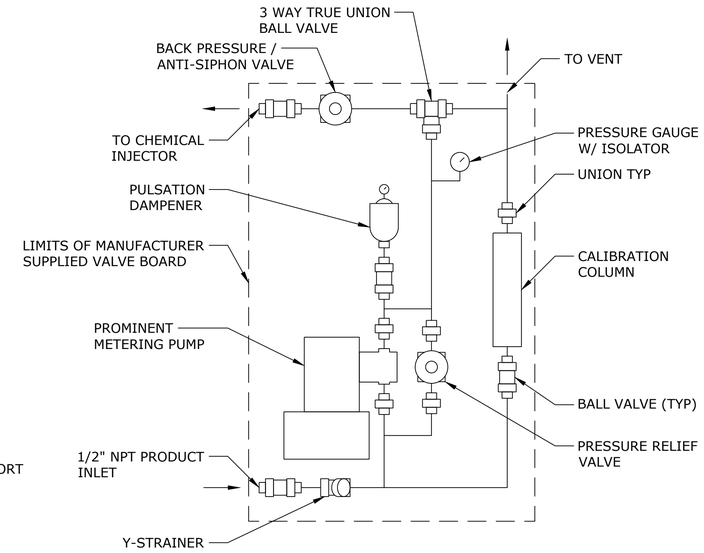

METERING PUMP VALVE BOARD ASSEMBLY

SCALE: 1" = 1'-0"

1 / M-6

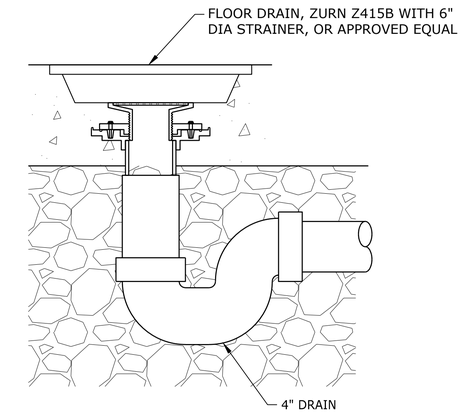

TYPICAL FLOOR DRAIN

SCALE: NTS

5 / M-7

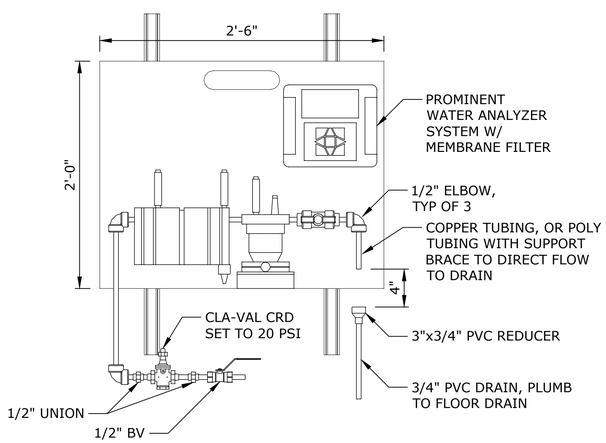

WATER QUALITY ANALYZER BOARD

SCALE: 1 1/2" = 1'-0"

2 / M-6

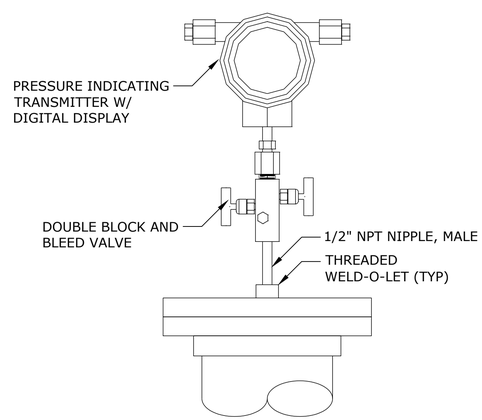

PRESSURE INDICATING TRASNMITTER

SCALE: 3" = 1'-0"

3 / M-3

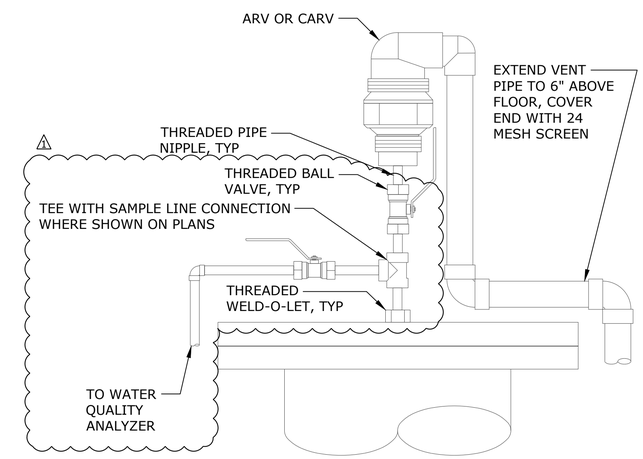

NOTE:

1. PIPE, FITTING, AND VALVE SIZES SHALL MATCH AIR VALVE INLET DIAMETER UNLESS NOTED OTHERWISE.

AIR RELEASE OR COMBINATION AIR/VAC VALVE

SCALE: NTS

4 / M-2 / M-3

NO.	DATE	BY	REVISION
1	02/05/2024	SWW	ADDENDUM 1

NOTICE: 0 ½ 1 — IF THIS BAR DOES NOT MEASURE 1" THEN DRAWING IS NOT TO SCALE

TMH DESIGNED
JLC DRAWN
NCR CHECKED

NATHAN C. ROSTAD — STATE OF WASHINGTON — 55144 — REGISTERED PROFESSIONAL ENGINEER — 2-6-2024

consor

Shaping our community together — CITY OF LACEY

CITY OF LACEY, WASHINGTON
MADRONA pH TREATMENT PROJECT
LACEY CONTRACT #PW 2022-37

MISCELLANEOUS MECHANICAL DETAILS - 1

PROJECT NO.: 21-3028 | SCALE: AS SHOWN | DATE: JANUARY 2024

SCHEDULE A
SHEET
M-13

K:\TAC_Projects\21\3028 - Lacey - Madrona PH Treatment\CAD\Sheets\M-13-15 MECHANICAL DETAILS.dwg M-13 2/5/2024 4:57 PM JARED.CLOUD 23.0s (LMS Tech)

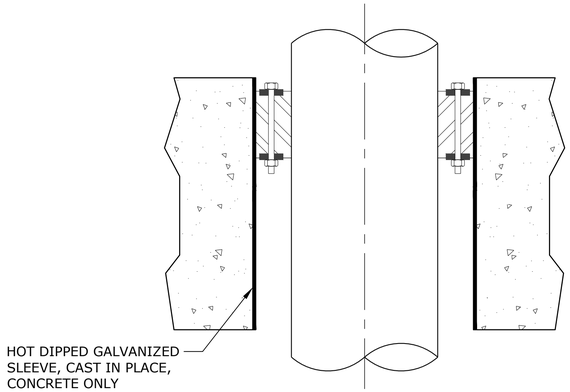

FLOOR PENETRATION DETAIL

SCALE: NTS

1 / M-3

M-4

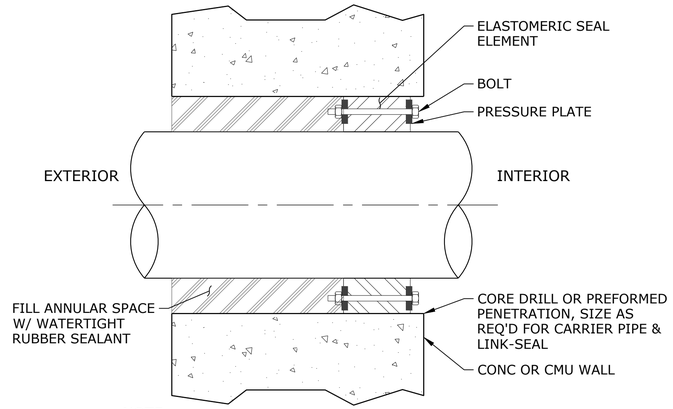

NOTE:

1. GROUT CMU WALL TO 12" ABOVE PENETRATION PRIOR TO CORE DRILLING.

LINK SEAL DETAIL

SCALE: NTS

2 / M-9

M-10
M-11

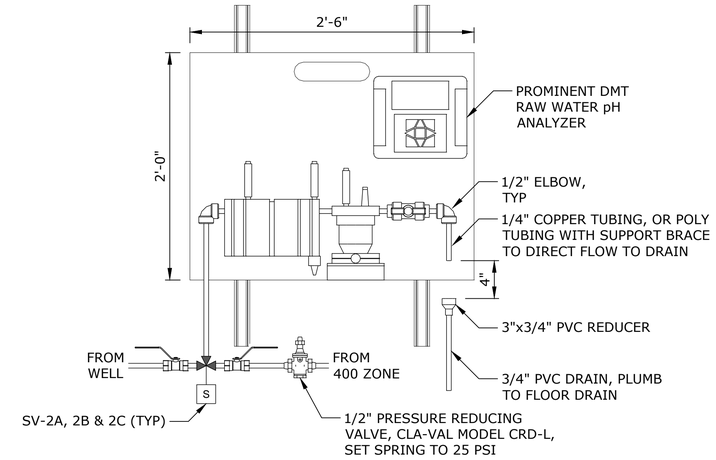

RAW WATER pH ANALYZER BOARD

SCALE: 1 1/2" = 1'-0"

3 / M-9

M-10
M-11

NOTES:

1. WELL PUMP SHALL SUPPLY ANALYZER UNDER SOLENOID VALVE ENERGIZED CONDITIONS.

2. 400 ZONE SHALL SUPPLY ANALYZER UNDER SOLENOID VALVE DE-ENERGIZED CONDITIONS.

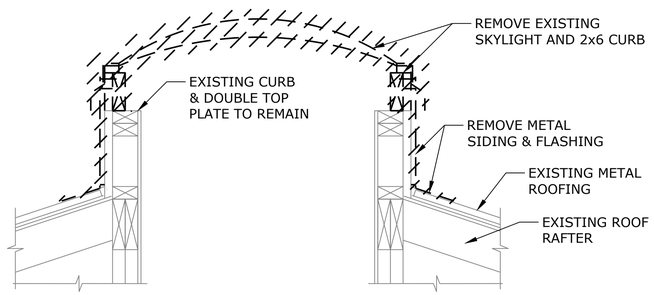

WELL 1 & WELL 2 SKYLIGHT DEMOLITION

SCALE: NTS

4 / M-9

M-10

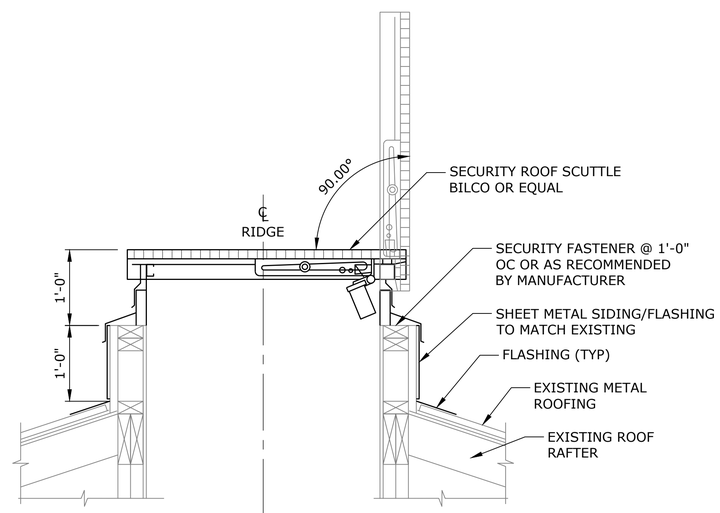

⚠ NOTE:

APPROXIMATE SIZE OF EXISTING SKYLIGHT BEING REPLACED IS 4'-0" X 4'-0". FIELD VERIFY EXACT SIZE PRIOR TO ORDERING NEW ROOF HATCH TO ENSURE PROPER FIT.

WELL 1 & WELL 2 ROOF HATCH

SCALE: NTS

5 / M-9

M-10

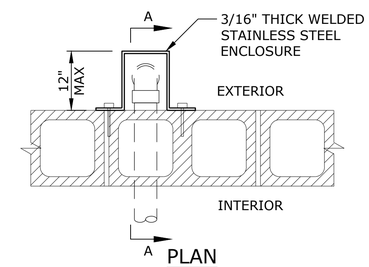

PLAN

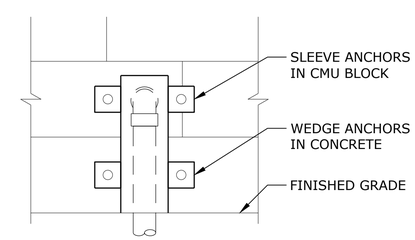

ELEVATION

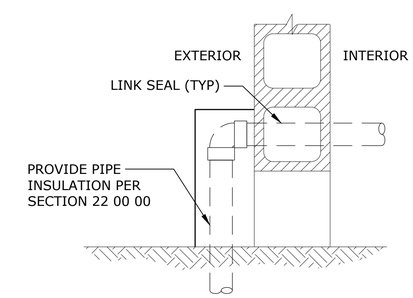

SECTION AA

PIPE ENTRANCE ENCLOSURE

SCALE: NTS

6 / M-6

M-9
M-10
M-11
M-12

NO.	DATE	BY	REVISION
⚠	02/05/2024	SWW	ADDENDUM 1

NOTICE

0 ½ 1

IF THIS BAR DOES NOT MEASURE 1" THEN DRAWING IS NOT TO SCALE

TMH DESIGNED
JLC DRAWN
NCR CHECKED

NATHAN C. ROSTAD — STATE OF WASHINGTON — 55144 — REGISTERED PROFESSIONAL ENGINEER — 2-6-2024

consor

Shaping our community together — CITY OF LACEY

CITY OF LACEY, WASHINGTON MADRONA pH TREATMENT PROJECT LACEY CONTRACT #PW 2022-37

MISCELLANEOUS MECHANICAL DETAILS - 3

PROJECT NO.: 21-3028 | SCALE: AS SHOWN | DATE: JANUARY 2024

SCHEDULE A
SHEET
M-15

K:\TAC_Projects\21\3028 - Lacey - Madrona PH Treatment\CAD\Sheets\M-13-15 MECHANICAL DETAILS.dwg M-15 2/5/2024 4:57 PM JARED.CLOUD 23.0s (LMS Tech)

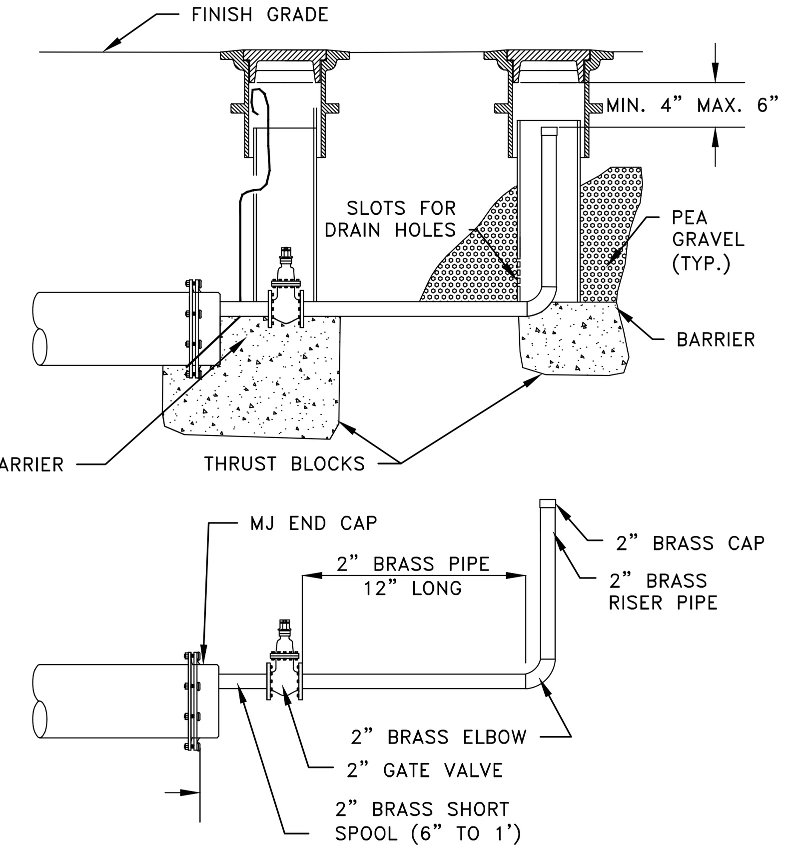

GENERAL NOTES:
1. FOR VALVE BOX REQUIREMENTS SEE CITY STD DWG 6-12.0.
2. FILL THE AREA OUTSIDE OF THE BLOW-OFF RISER STAND PIPE WITH PEA GRAVEL.
3. ALL 2" PIPING AND FITTINGS SHALL BE DOMESTIC BRASS.

EXTENDABLE MAIN WITH BLOWOFF

SCALE: NTS

1 / C-12 / C-13

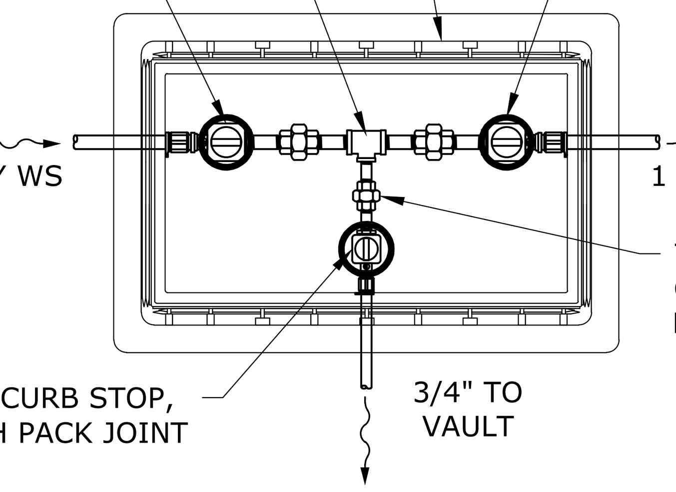

NOTES:

1. WATER SERVICE LINES SHALL COMPLY WITH SECTION 6.120C OF THE CITY DEVELOPMENT GUIDELINES

2. BALL VALVE CURB STOP: FORD B11-666-NL, MUELLER B20283N, AY-McDONALD 76101-1-1/2".

WATER SERVICE VALVE BOX

SCALE: NTS

2 / C-12 / C-16

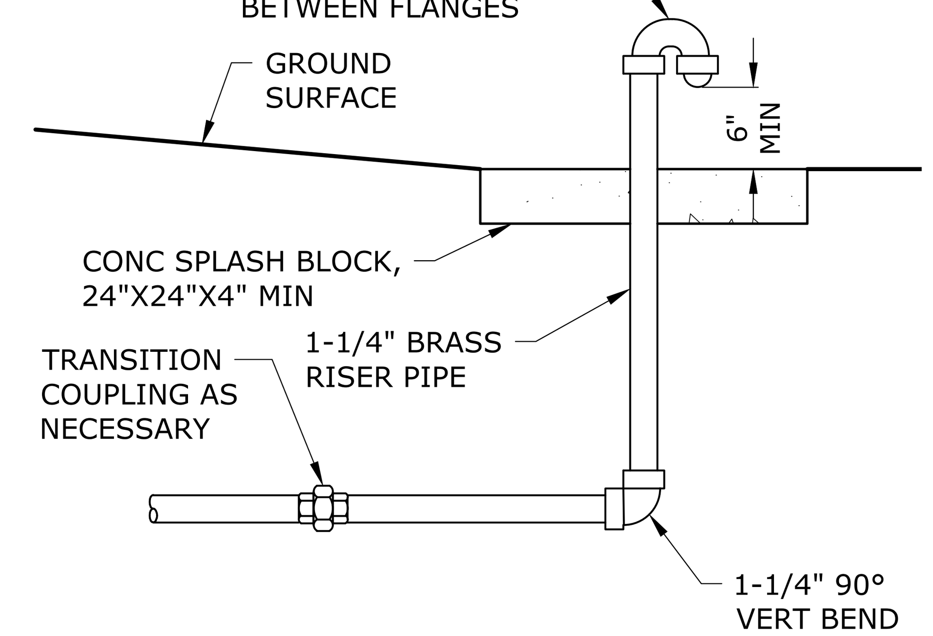

NOTES:

1. CONTRACTOR SHALL PROVIDE THRUST RESTRAINT AS REQUIRED.

SUMP DRAIN BLOWOFF

SCALE: NTS

3 / C-16 / C-19

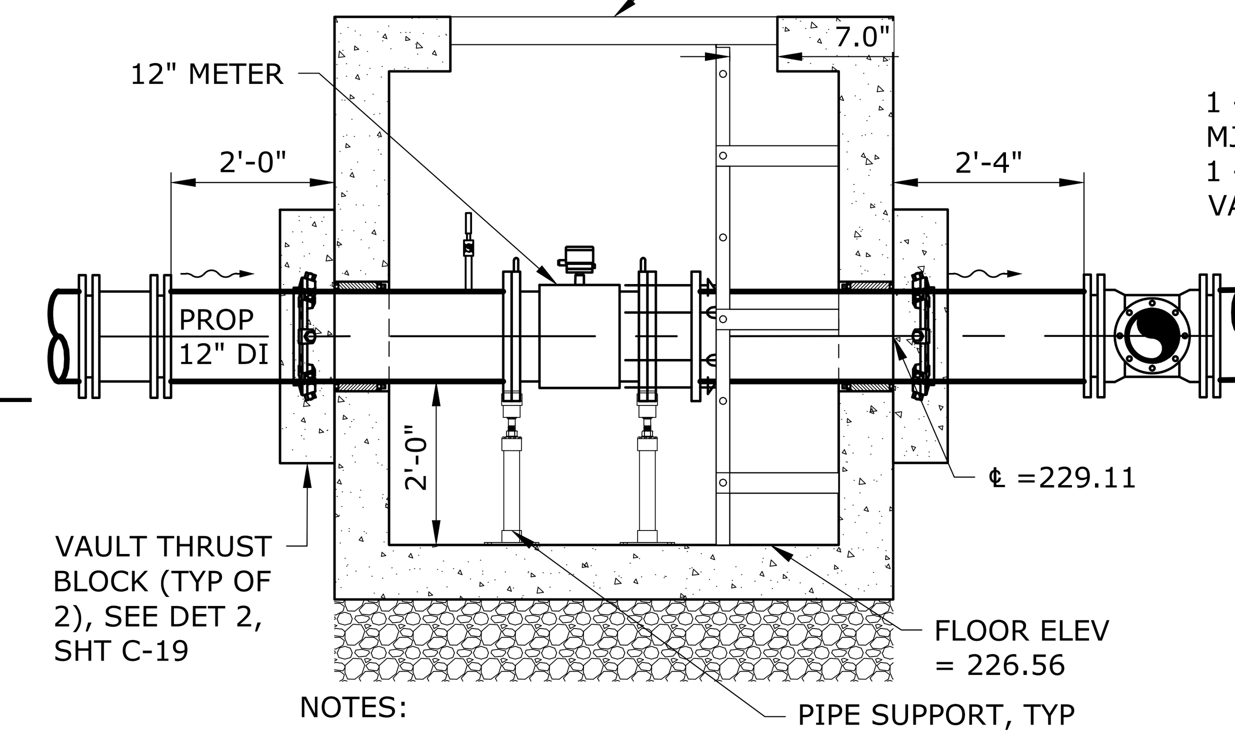

NOTES:

1. REMOTELY MOUNT METER TRANSMITTER IN TREATMENT BUILDING. SEAL J-BOX WITH SUBMERGENCE POTTING.
2. CONTRACTOR SHALL PROVIDE BUOYANCY CALCULATION WITH VAULT SUBMITTAL.

12IN METER VAULT SECTION - 'A'

SCALE: 1/2"=1'

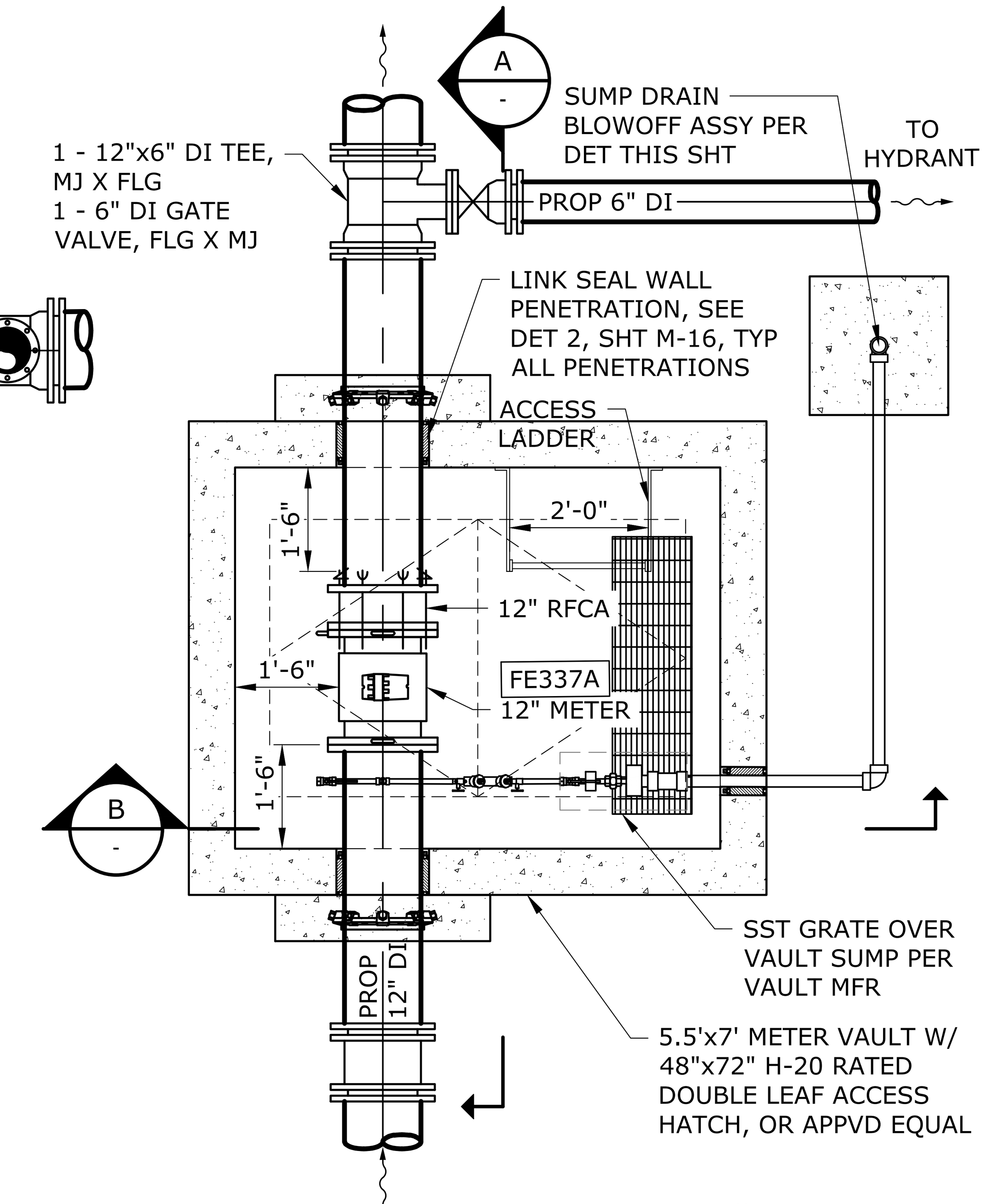

12IN METER VAULT

SCALE: 1/2"=1'

4 / C-4 / C-14

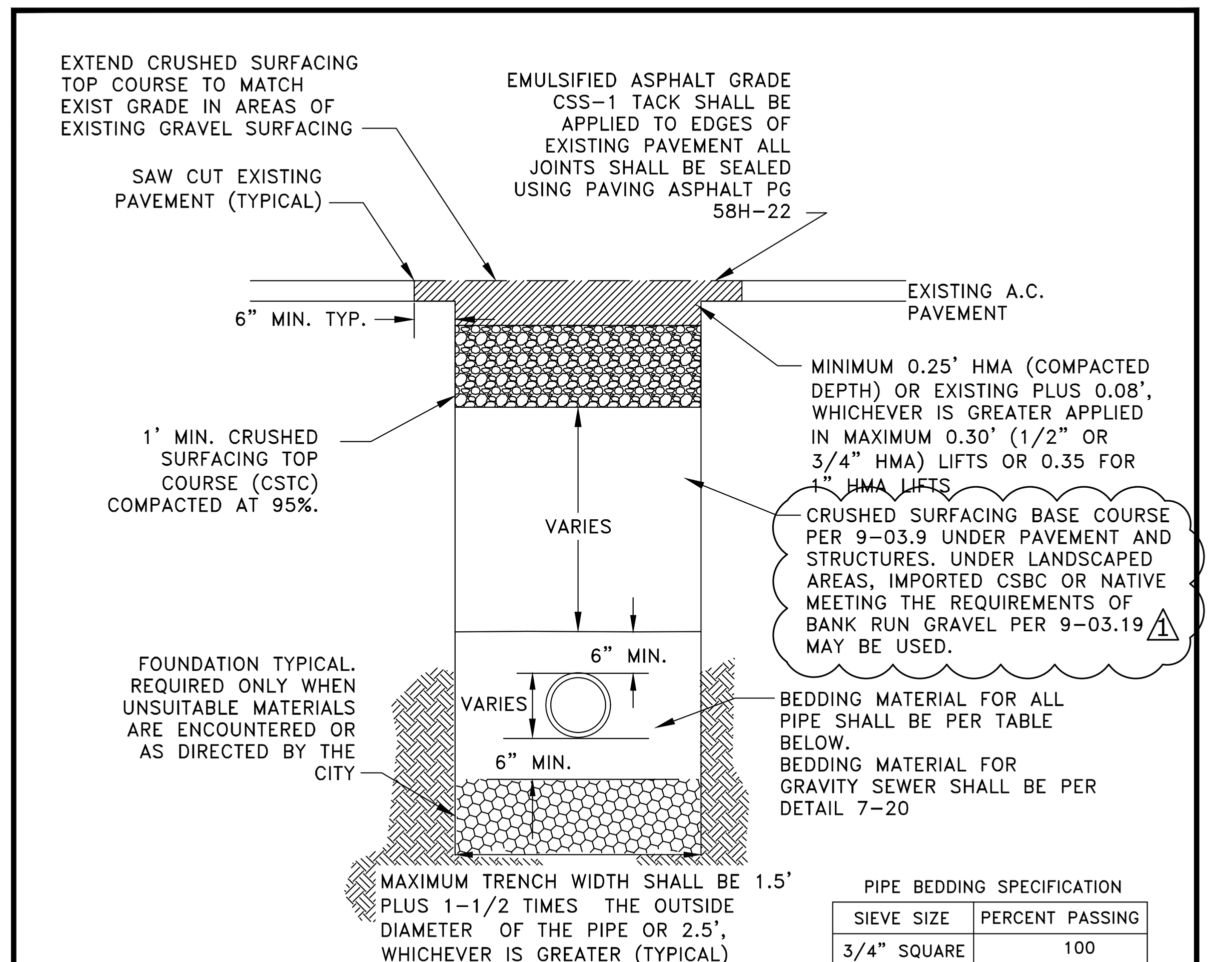

PIPE BEDDING SPECIFICATION

SIEVE SIZE	PERCENT PASSING
3/4" SQUARE	100
3/8" SQUARE	70-100
U.S. NO.4	55-100
U.S. NO. 10	35-95
U.S. NO. 20	20-80
U.S. NO. 40	10-55
U.S. NO. 100	0-10
U.S. NO. 200	0-03

GENERAL NOTES:
1. ALL MATERIALS EXCEPT H.M.A. SHALL BE COMPACTED IN 6-INCH MAXIMUM LIFTS TO 95% DENSITY AS DETERMINED BY ASTM D1557.
2. ALL MATERIALS, WORKMANSHIP, AND INSTALLATION SHALL BE IN CONFORMANCE WITH THE WSDOT STANDARD SPECIFICATIONS FOR ROAD, BRIDGE AND MUNICIPAL CONSTRUCTION AS AMENDED BY CITY OF LACEY STANDARDS.
3. KEEP TRENCH BOTTOM COMPACTED WITH UNIFORM GRADE. NO TEMPORARY SUPPORTS, I.E. BLOCKS, WILL BE ALLOWED TO SUPPORT PIPE. TRENCH BOTTOM SHALL BE TO GRADE PRIOR TO PIPE INSTALLATION.
4. SAW CUT PAVEMENT TO MAX. TRENCH WIDTH. BACKFILL AND PAVE TO TOP OF EXISTING PAVEMENT FOR TRENCH WIDTH. ALLOW 24 HOURS MINIMUM FOR TRENCH PATCH TO CURE. GRIND AND PAVE FINAL PATCH AS SHOWN.
5. DEVIATION FROM COMPACTION STANDARDS MAY BE APPROVED BY THE DIRECTOR, OR DESIGNEE, WHERE RECOMMENDED BY THE LICENSED PROFESSIONAL ENGINEER FOR PLANNED OR EXISTING INFILTRATION FACILITIES.
6. EXISTING SURFACES PAVED WITH PERMEABLE MATERIALS SHALL BE REPLACED IN-KIND WHERE FEASIBLE IN CONFORMANCE WITH 4B.180 TRENCH BACKFILL AND RESTORATION.

DG4-8.2.DWG

CITY OF LACEY, WASHINGTON
DEPT. OF PUBLIC WORKS

RESIDENTIAL TRENCH RESTORATION

APPROVED — CITY ENGINEER | DWG. NO. 4-8.2

DES	DWN	CKD	DATE
WHO	WHO	RAS	08/24/2017

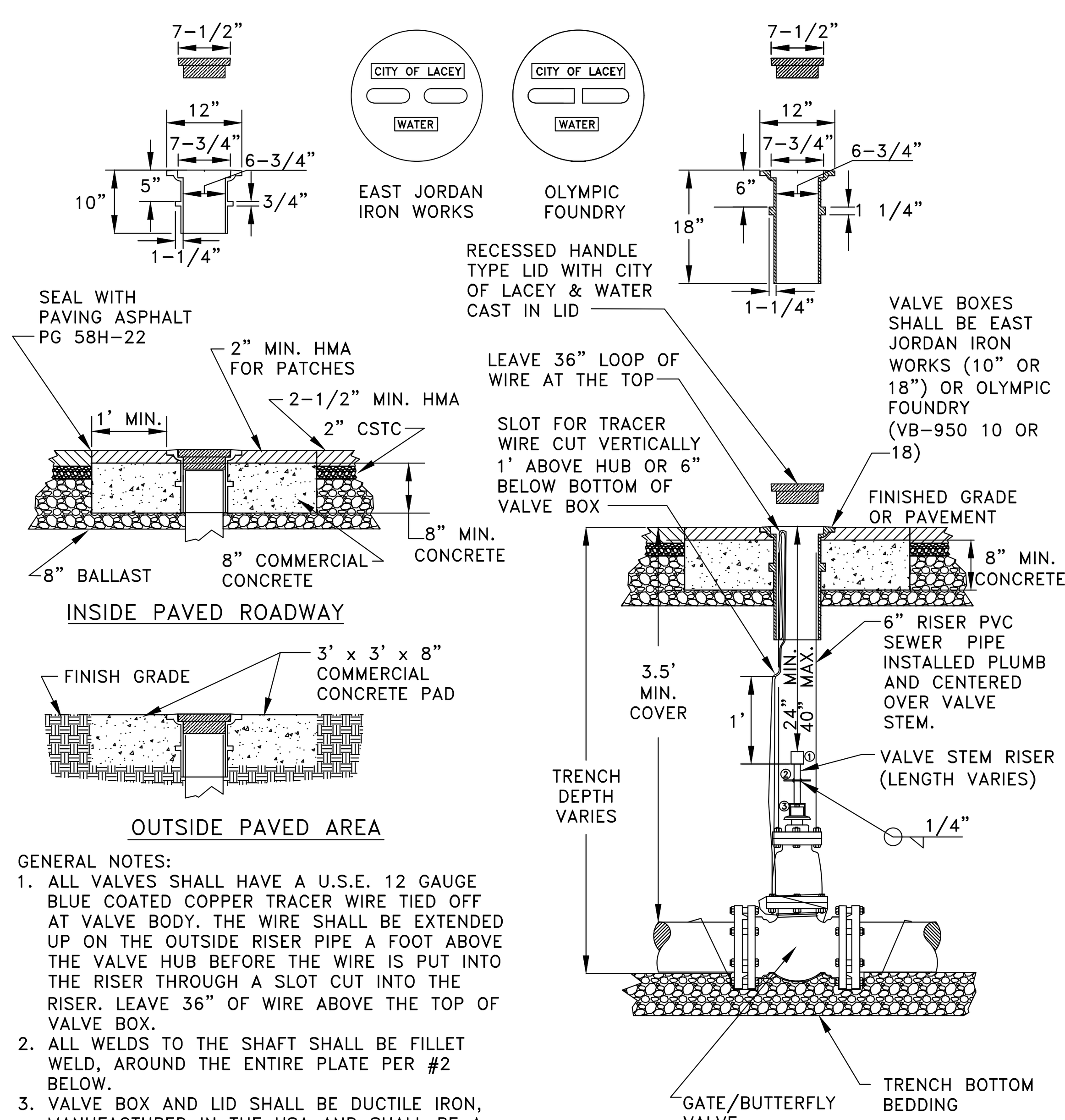

GENERAL NOTES:
1. ALL VALVES SHALL HAVE A U.S.E. 12 GAUGE BLUE COATED COPPER TRACER WIRE TIED OFF AT VALVE BODY. THE WIRE SHALL BE EXTENDED UP ON THE OUTSIDE RISER PIPE A FOOT ABOVE THE VALVE HUB BEFORE THE WIRE IS PUT INTO THE RISER THROUGH A SLOT CUT INTO THE RISER. LEAVE 36" OF WIRE ABOVE THE TOP OF VALVE BOX.
2. ALL WELDS TO THE SHAFT SHALL BE FILLET WELD, AROUND THE ENTIRE PLATE PER #2 BELOW.
3. VALVE BOX AND LID SHALL BE DUCTILE IRON, MANUFACTURED IN THE USA AND SHALL BE A MATCHED SET FROM THE SAME MANUFACTURER.
4. EXISTING SURFACES PAVED WITH PERMEABLE MATERIALS SHALL BE REPLACED IN-KIND WHERE FEASIBLE IN CONFORMANCE WITH 4B.180 TRENCH BACKFILL AND RESTORATION.

VALVE STEM EXTENSION LEGEND

① VALVE OPERATING NUT OR 1-7/8" X 1-7/8" X 2" HIGH GRADE STEEL WELDED TO GUIDE PLATE.
② 3/16" THICK X 5 1/5" DIA STEEL GUIDE PLATE WELDED TO RISER SHAFT.
③ 2"X2"X 3/16" SQUARE STRUCTURAL STEEL TUBING TO FIT OPERATING NUT. LENGTH AS REQUIRED.

DG6-12.0.DWG

CITY OF LACEY, WASHINGTON
DEPT. OF PUBLIC WORKS

STANDARD VALVE BOX INSTALLATION

APPROVED — CITY ENGINEER | DWG. NO. 6-12.0

DES	DWN	CKD	DATE
WHO	WHO	RAS	08/24/2017

THE WATER MAIN IS LOCATED 6' FROM THE CENTERLINE OF ROAD ON THE NORTH OR EAST SIDE.

ENVIRONMENT	METER BOX
TO BE USED IN ALL APPLICATIONS	CHRISTY FIBRELYTE BOX & LID BOX: FL 36T-12 LID: FL 36-D W/CITY OF LACEY IN LID

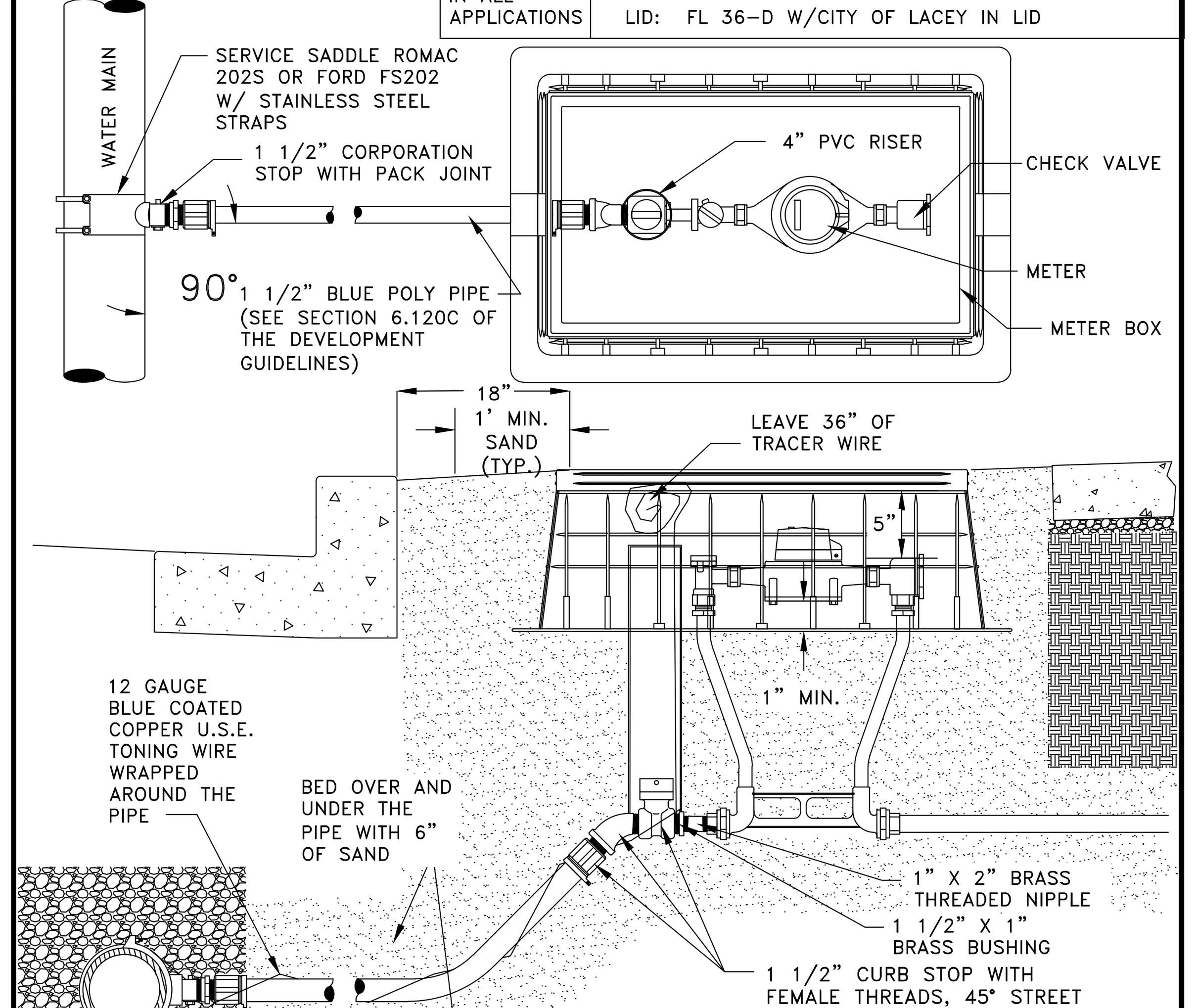

7. BALL VALVE CURB STOP: FORD B11-666-NL, MUELLER B20283N, AY-McDONALD 76101-1-1/2".
8. BALL VALVE CORPORATION STOP: FORD FB-1101-6G-NL, MUELLER E25029N, AY-McDONALD 74704B-33-1-1/2".

GENERAL NOTES:
1. METER BOXES SHALL NOT BE INSTALLED IN CONCRETE OR CONCRETE DRIVEWAYS. WHEN NECESSARY CREATE PLANTERS FOR METER BOX INSTALLATION.
2. STAINLESS STEEL INSERTS ARE REQUIRED FOR ALL PACK JOINTS.
3. THE SETTER ANGLE STOP SHALL BE A MINIMUM OF 1" ABOVE BOTTOM OF METER BOX. INSIDE OF BOX SHALL BE CLEAN OF EXCESS SAND OR DEBRIS.
4. FILL THE ENTIRE AREA AROUND AND UNDER THE METER BOX WITH A MINIMUM 1' OF SAND.
5. ALL BRASS AND COPPER SHALL BE LOW LEAD COMPLIANT.
6. COPPER METER SETTERS: FORD VBH 74-15W, MUELLER B2404-R2AG15, AY-McDONALD 20-412WCDD44.

DG6-1.1.DWG

CITY OF LACEY, WASHINGTON
DEPT. OF PUBLIC WORKS

1" SINGLE METER SERVICE

APPROVED — CITY ENGINEER | DWG. NO. 6-1.1

DES	DWN	CKD	DATE
WHO	WHO	RAS	12/15/2014

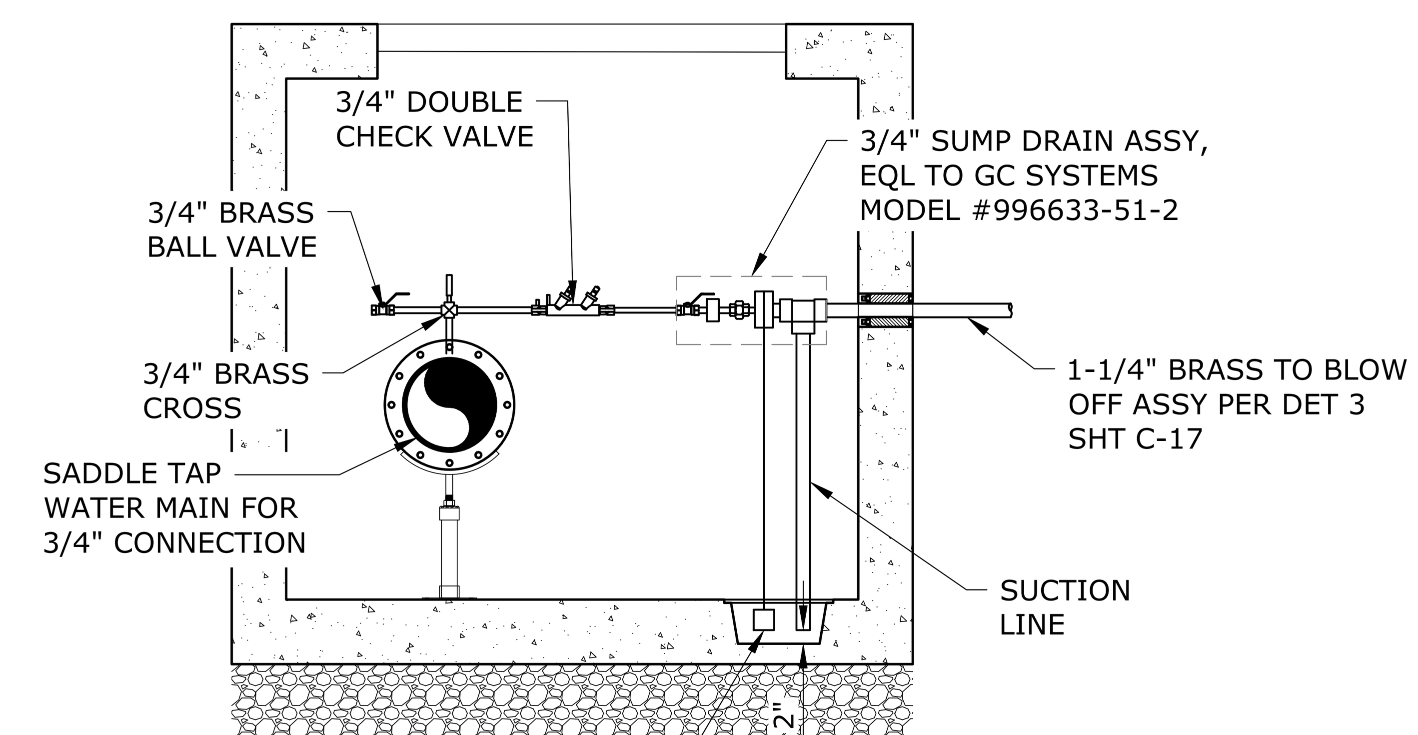

NOTES:

1. SUMP DISCHARGE PIPE TO BE SCH 80 PVC UNLESS OTHERWISE NOTED.
2. SEE SHT C-4 FOR BLOWOFF LOCATION
3. LADDER NOT SHOWN THIS VIEW FOR CLARITY

12IN METER VAULT SECTION - 'B'

SCALE: 1/2"=1'

K:\TAC_Projects\21\3172 - Lacey - Westside PH Treatment\CAD\Sheets\21-3172-WA-C-DET.dwg C-17 8/31/2023 2:24 PM SEAN.WALMSLEY 23.0s (LMS Tech)

NO.	DATE	BY	REVISION
1	2/6/2024	SWW	ADDENDUM 1

NOTICE
0 ½ 1
IF THIS BAR DOES NOT MEASURE 1" THEN DRAWING IS NOT TO SCALE

SWW — DESIGNED
SWW — DRAWN
NCR — CHECKED

NATHAN C. ROST — STATE OF WASHINGTON — 55144 — REGISTERED PROFESSIONAL ENGINEER — 2-6-2024

consor

Shaping our community together — CITY OF LACEY

CITY OF LACEY, WASHINGTON
WESTSIDE pH TREATMENT PROJECT
LACEY CONTRACT #PW 2022-37

SITE PIPING DETAILS - 2

PROJECT NO.: 21-3172 | SCALE: AS SHOWN | DATE: AUGUST 2023

SCHEDULE B
SHEET
C-17

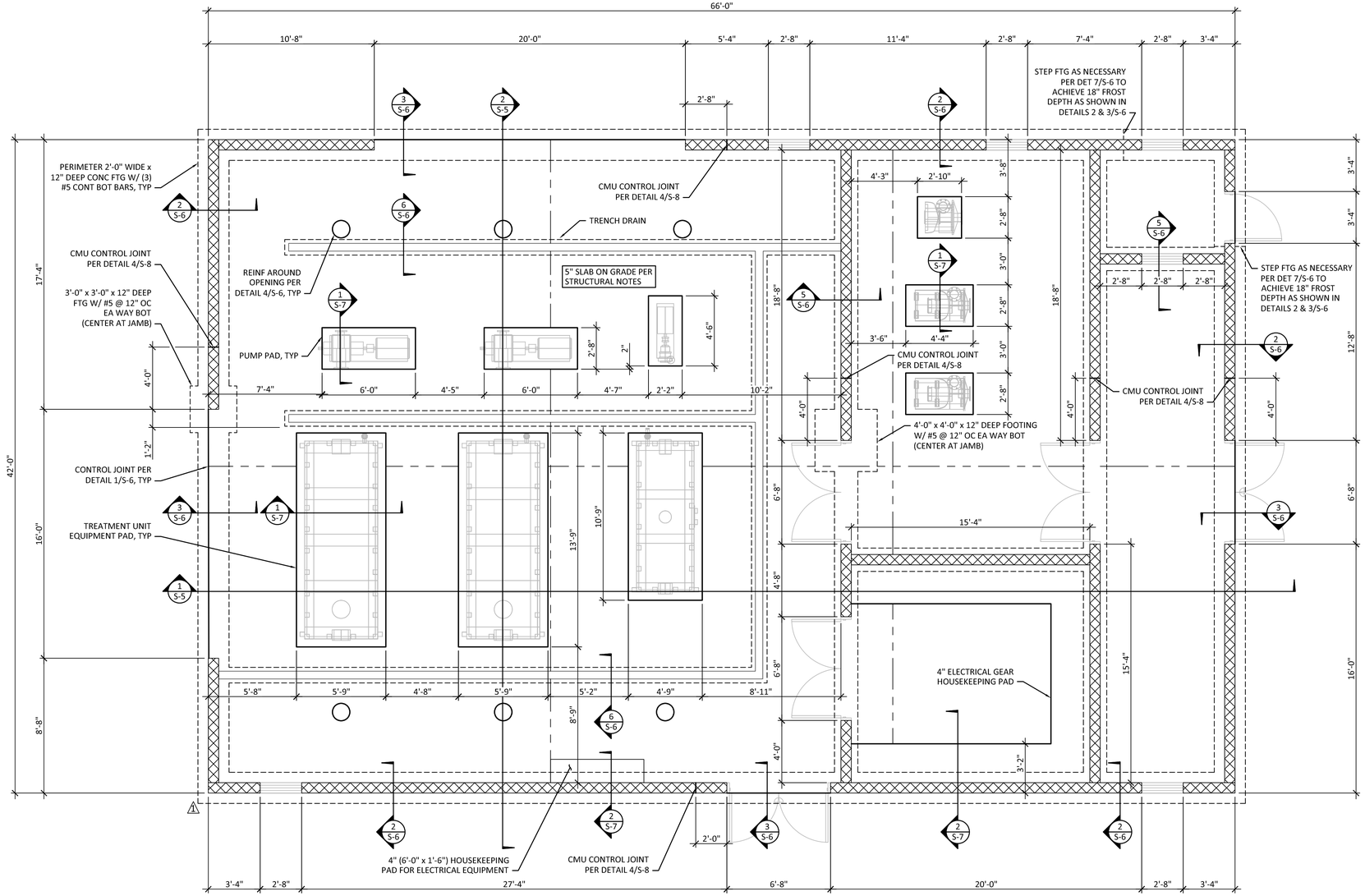

1 FOUNDATION PLAN

SCALE: 1/4" = 1'-0"

FOUNDATION PLAN NOTES:

1. EXTERIOR FOOTINGS SHALL BEAR A MIN OF 1'-6" BELOW ADJACENT GRADE.
2. FOOTINGS AND SLAB ON GRADE SHALL BEAR ON FIRM NATIVE SOIL OR COMPACTED STRUCTURAL FILL AS SPECIFIED IN THE SOILS REPORT. REFER TO THE SOILS REPORT FOR THE SPECIFICS REGARDING EXCAVATION SUBGRADE PREPARATION BELOW THE FOUNDATION AND SLAB ON GRADE.
3. WHERE SLAB ON GRADE IS INDICATED, SLAB SHALL BE 5" THICK W/ #4 @ 12" OC WA WAY, CENTERED. SLAB SHALL BE POURED OVER A 10 MIL VAPOR BARRIER OVER GRAVEL AND/OR SUBGRADE RECOMMENDED BY THE SOILS ENGINEER.
4. REFER TO PLAN AND "CONCRETE GENERAL NOTES" ON SHEET S-1 FOR CONTROL JOINT PLACEMENT AND DETAIL 1/S-6 FOR CONTROL JOINT CONSTRUCTION.
5. REFER TO SHEET S-6 & S-7 FOR FOUNDATION DETAILS.
6. PLACE ALL REINFORCEMENT PER THE STRUCTURAL NOTES AND FOUNDATION DETAILS. REFER TO SHEET S-1 FOR ADDITIONAL CONCRETE DETAILING REQUIREMENTS.
7. CONTRACTOR SHALL VERIFY ALL DIMENSIONS, WALL LOCATIONS, AND CONCRETE ROUGH OPENINGS WITH MECHANICAL DRAWINGS AND NOTIFY ALL PARTIES OF ANY DISCREPANCIES.
8. REFER TO DETAIL 4/S-6 FOR PIPE PENETRATIONS THROUGH CONCRETE SLAB.
9. CONTRACTOR SHALL PROVIDE FOOTING AND SLAB SUBSTRATE PREPARATION, WATERPROOFING, AND BACKFILL & DRAINAGE PER GEOTECHNICAL REPORT. GEOTECHNICAL ENGINEER SHALL OBSERVE EXCAVATED SOIL CONDITIONS DURING CONSTRUCTION (AND GROUNDWATER CONDITIONS) AS REQUIRED, AND PROVIDE ADDITIONAL RECOMMENDATIONS IF NECESSARY BASED ON ACTUAL SITE CONDITIONS.
10. REFER TO SHEET M-7 FOR FLOOR SLOPE DETAILS.

CG ENGINEERING
250 4TH AVE. S., SUITE 200
EDMONDS, WASHINGTON 98020
PHONE (425) 778-8500
FAX (425) 778-5536

NO.	DATE	BY	REVISION
1	02/06/24	JGG	ADDENDUM 1 - FOOTING WIDTH SCALE CORRECTION

NOTICE
0 ½ 1
IF THIS BAR DOES NOT MEASURE 1" THEN DRAWING IS NOT TO SCALE

BTJ DESIGNED
LVW DRAWN
JGG CHECKED

JOSEPH G. GALLISHER — STATE OF WASHINGTON — 38953 — PROFESSIONAL ENGINEER
02/06/24

consor

Shaping our community together
CITY OF LACEY

CITY OF LACEY, WASHINGTON
WESTSIDE pH TREATMENT PROJECT
LACEY CONTRACT #PW 2022-37

FOUNDATION PLAN

PROJECT NO.: 21-3172 | SCALE: AS NOTED | DATE: AUGUST 2023

SCHEDULE B
SHEET
S-3

R:_2021 Projects\21325.10 City Of Lacey Westside Ph Treatment_structural\Drafting_xx.xx.xx Current\S-3.dwg Paper 2/6/2024 9:04 AM JAKEG 24.3s (LMS Tech)

VALVE SCHEDULE

TAG NO.	TYPE	SIZE, INCHES	PRESSURE RATING	OPERATOR TYPE	SPECIFICATION
PR1	PRESSURE RELIEVE VALVE	3	150 PSI	PASSIVE HYDRAULIC	40 50 23.74
CHKV1	SWING CHECK VALVE	8	150 PSI	PASSIVE HYDRAULIC	40 05 23.24
CHKV2	SWING CHECK VALVE	8	150 PSI	PASSIVE HYDRAULIC	40 05 23.24
CHKV3	SWING CHECK VALVE	4	150 PSI	PASSIVE HYDRAULIC	40 05 23.24
CHKV4	DOUBLE CHECK VALVE BACKFLOW PREVENTER	4	150 PSI	PASSIVE HYDRAULIC	40 05 23.24
FCV01A	SOLENOID SHUTOFF VALVE	6	150 PSI	SOLENOID	MODIFY EXISTING PER 40 05 23.73
FCV01B	DEEP WELL CONTROL VALVE	3	150 PSI	HYDRAULIC/SOLENOID	MODIFY EXISTING PER 40 05 23.73
FCV02A	SOLENOID SHUTOFF VALVE	6	150 PSI	SOLENOID	MODIFY EXISTING PER 40 05 23.73
FCV02B	DEEP WELL CONTROL VALVE	3	150 PSI	HYDRAULIC/SOLENOID	MODIFY EXISTING PER 40 05 23.73
FCV03A	SOLENOID SHUTOFF VALVE	6	150 PSI	SOLENOID	40 05 23.73
FCV03B	DEEP WELL CONTROL VALVE	3	150 PSI	HYDRAULIC/SOLENOID	40 05 23.73
FCV337	ELECTRONIC CONTROL VALVE	12	150 PSI	SOLENOID	40 05 23.73
GV1A	GATE VALVE	8	150 PSI	MANUAL/HANDWHEEL	40 05 23
GV1B	GATE VALVE	8	150 PSI	MANUAL/HANDWHEEL	40 05 23
GV1C	GATE VALVE	8	150 PSI	MANUAL/HANDWHEEL	40 05 23
GV2A	GATE VALVE	8	150 PSI	MANUAL/HANDWHEEL	40 05 23
GV2B	GATE VALVE	8	150 PSI	MANUAL/HANDWHEEL	40 05 23
GV2C	GATE VALVE	8	150 PSI	MANUAL/HANDWHEEL	40 05 23
GV3A	GATE VALVE	6	150 PSI	MANUAL/HANDWHEEL	40 05 23
GV3B	GATE VALVE	4	150 PSI	MANUAL/HANDWHEEL	40 05 23
GV3C	GATE VALVE	6	150 PSI	MANUAL/HANDWHEEL	40 05 23
GV4A	GATE VALVE	4	150 PSI	MANUAL/HANDWHEEL	40 05 23
GV4B	GATE VALVE	4	150 PSI	MANUAL/HANDWHEEL	40 05 23
FCV01C	PRE-LUBE VALVE	3/4	150 PSI	SOLENOID	40 05 23.72
FCV01D	3-WAY SOLENOID VALVE	1/2	150 PSI	SOLENOID	40 05 23.72
FCV02D	3-WAY SOLENOID VALVE	1/2	150 PSI	SOLENOID	40 05 23.72
FCV03D	3-WAY SOLENOID VALVE	1/2	150 PSI	SOLENOID	40 05 23.72
BFV-1	BUTTERFLY VALVE, AIR	6	150 PSI	MANUAL/LEVER	40 05 23 / 46 51 15
BFV-2	BUTTERFLY VALVE, AIR	6	150 PSI	MANUAL/LEVER	40 05 23 / 46 51 15
BFV-3	BUTTERFLY VALVE, AIR	6	150 PSI	MANUAL/LEVER	40 05 23 / 46 51 15

1

PUMP SCHEDULE

TAG NO.	SERVICE	TYPE	SIZE	SPECIFICATION
P-S1	RAW WATER	VERTICAL TURBINE	30 HP	43 21 52
P-S2	RAW WATER	VERTICAL TURBINE	50 HP	43 21 39
P-S3	RAW WATER	VERTICAL TURBINE	20 HP	43 21 39
P-T1	TREATED WATER	HORIZONTAL CENTRIFUGAL	40 HP	43 21 15
P-T2	TREATED WATER	HORIZONTAL CENTRIFUGAL	40 HP	43 21 15
P-T3	TREATED WATER	END SUCTION CENTRIFUGAL	15 HP	43 23 13
P-CL01	CHLORINE	DIAPHRAGM/METERING	PER SPEC	46 33 42
P-CL02	CHLORINE	DIAPHRAGM/METERING	PER SPEC	46 33 42
P-CL03	CHLORINE	DIAPHRAGM/METERING	PER SPEC	46 33 42

BLOWER SCHEDULE

TAG NO.	TYPE	AIR FLOW (CFM)	SP, IN W.G.	BLOWER RPM	MOTOR			MFR & MODEL NO.	SPECIFICATION
					HP	VOLTS	PHASE		
B-1	MULTISTAGE CENTRIFUGAL	1000	40	3600	20	460	3	SPENCER S24103C	46 51 15
B-2	MULTISTAGE CENTRIFUGAL	1000	40	3600	20	460	3	SPENCER S24103C	46 51 15
B-3	MULTISTAGE CENTRIFUGAL	500	40	3600	10	460	3	SPENCER S24103B	46 51 15

FAN SCHEDULE

TAG NO.	TYPE	AIR FLOW (CFM)	SP, IN W.G.	FAN RPM	MOTOR			MFR & MODEL NO.	SPECIFICATION
					HP	VOLTS	PHASE		
EF1	WALL MOUNT	1741	0.26	1160	1/4	115	1	GREENHECK AER-E24C	23 34 00
EF2	WALL MOUNT	380	0.25	719	1/4	115	1	GREENHECK AER-E24C	23 34 00
EF3	WALL MOUNT	328	0.23	1650	1/20	115	1	GREENHECK SE1-10-428-P	23 34 00

FLOW METER SCHEDULE

TAG NO.	DESCRIPTION	LOCATION	TYPE	SIZE	PRESSURE RATING	SPECIFICATION
FE01	SOURCE SO1 FLOW METER	VAULT	MAG METER	6 INCHES	150	40 71 13
FE02	SOURCE SO2 FLOW METER	VAULT	MAG METER	6 INCHES	150	40 71 13
FE03	SOURCE SO3 FLOW METER	VAULT	MAG METER	8 INCHES	150	40 71 13
FE337	337 ZONE ENTRY POINT FLOW METER	VAULT	MAG METER	12 INCHES	150	40 71 13

HVAC SCHEDULE

TAG NO.	TYPE	LOCATION	CAPACITY (BTU/HR)		SPECIFICATION
			HEATING	COOLING	
HP-1	FLOOR MOUNT	OUTSIDE BUILDING	54000	48000	23 81 40
HP-2	FLOOR MOUNT	OUTSIDE BUILDING	42000	36000	23 81 40
AH-1	WALL MOUNT	TREATMENT ROOM	20000	18000	23 81 40
AH-2	WALL MOUNT	BLOWER ROOM	13500	12000	23 81 40
AH-3	WALL MOUNT	ELECTRICAL ROOM	13500	12000	23 81 40
AH-4	WALL MOUNT	STORAGE ROOM	6700	6000	23 81 40
AH-5	WALL MOUNT	RESTROOM	4500	4000	23 81 40

LOUVER SCHEDULE

TAG NO.	SIZE	DESCRIPTION	SPECIFICATION	DAMPER	SPECIFICATION
L1/D1	32IN X 32IN	TREATMENT ROOM INTAKE	08 91 19	ELECTRIC	23 09 13
L2/D2	32IN X 32IN	TREATMENT ROOM EXHAUST	08 91 19	ELECTRIC	23 09 13
L3/D3	32IN X 32IN	STORAGE ROOM INTAKE	08 91 19	ELECTRIC	23 09 13
L4/D4	32IN X 32IN	RESTROOM EXHAUST	08 91 19	ELECTRIC	23 09 13
L5/D5	32IN X 32IN	BLOWER ROOM INTAKE ACOUSTIC LOUVER	08 91 19	ELECTRIC	23 09 13
L6	32IN X 32IN	STORAGE ROOM/RESTROOM	08 91 19		23 09 13
L7/D7	16IN X 16IN	WELL BLDG S02 EXHAUST	08 91 19	ELECTRIC	23 09 13
L8	24IN X 12IN	WELL BLDG S02 DOOR MOUNTED INTAKE LOUVER	08 91 19, 08 10 00		

NO.	DATE	BY	REVISION
1	2/6/2024	SWW	ADDENDUM 1

NOTICE
0 ½ 1
IF THIS BAR DOES NOT MEASURE 1" THEN DRAWING IS NOT TO SCALE

SWW DESIGNED
JLC DRAWN
NCR CHECKED

NATHAN C. ROBERTS STATE OF WASHINGTON 55144 REGISTERED PROFESSIONAL ENGINEER 2-6-2024

consor

Shaping our community together
CITY OF LACEY

CITY OF LACEY, WASHINGTON WESTSIDE pH TREATMENT PROJECT LACEY CONTRACT #PW 2022-37

MECHANICAL

MECHANICAL SCHEDULES

PROJECT NO.: 21-3172 | SCALE: AS SHOWN | DATE: AUGUST 2023

SCHEDULE B
SHEET
M-1

K:\TAC_Projects\21\3172 - Lacey - Westside PH Treatment\CAD\Sheets\21-3172-WA-M-1.dwg M-1 2/1/2024 10:50 PM SEAN.WALMSLEY 23.0s (LMS Tech)

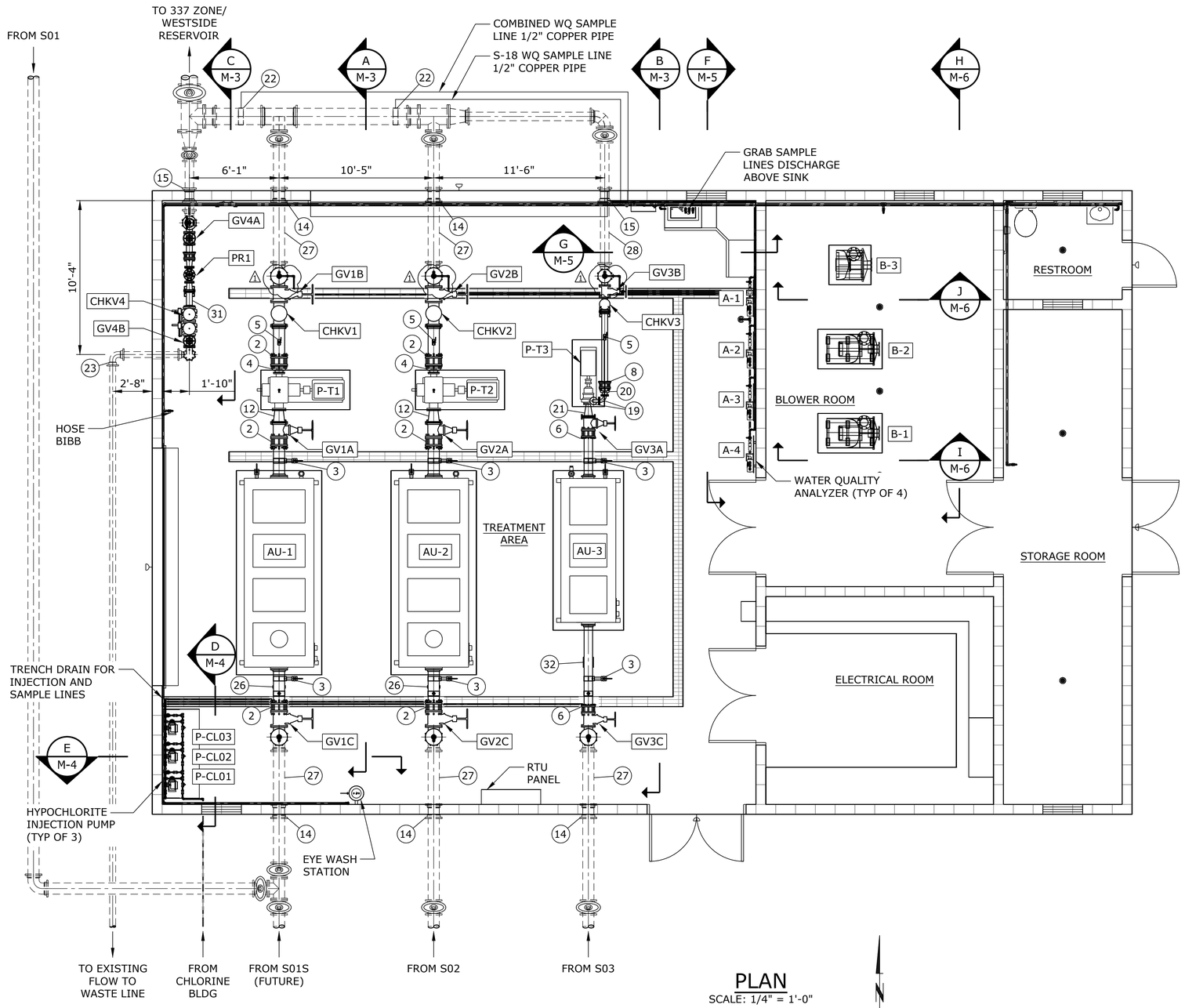

PLAN

SCALE: 1/4" = 1'-0"

GENERAL NOTE:

1. ALL METAL PIPING 3" AND LARGER SHALL BE MECHANICALLY RESTRAINED UNLESS NOTED OTHERWISE

FITTING LIST:

1. 8" DI TEE, FLG
2. 8" RFCA
3. 2" FLUSHING CONNECTION, SEE DET 2, SHT M-15
4. 8"x5" EXPANISON JOINT RED, FLG
5. PRESSURE GAUGE, SEE DET 1, SHT M-15
6. 6" RFCA
7. 6"x4" TEE, FLG
8. 4" RFCA
9. 4" 90° ELBOW
10. 1" AIR RELEASE VALVE, SEE DET 5, SHT M-14
11. PRESSURE INDICATING TRANSMITTER, SEE DET 4, SHT M-14
12. 8"x6" RED, FLG
13. 6" 90° BEND, MJ, RESTR
14. 8" LONG BODY SLEEVE, MJ, RESTR
15. 6" LONG BODY SLEEVE, MJ, RESTR
16. 8" 90° BEND, MJ, RESTR
17. 6" BLIND FLANGE
18. 8" BLIND FLANGE
19. 2" 90° BEND, FLG
20. 4"x2" EXPANSION JOINT RED, FLG
21. 6"x3" RED, FLG
22. WATER QUALITY SAMPLE TAP, SEE DET 3, SHT M-15
23. 4" 90° BEND, MJ, RESTR
24. 4"x3" RED, FLG
25. 8"x6" TEE, FLG
26. 8" DI SPOOL, FLGxPE
27. 8" DI SPOOL, PE
28. 6" DI SPOOL, PE
29. 4" DI SPOOL, FLGxPE
30. 4" DI SPOOL, PE
31. 4" DI SPOOL, FLG
32. 6" DI SPOOL, FLGxPE
33. PUMP CASING VENT VALVE. PROVIDE TUBING TO ROUTE DISCHARGE VIA AIR GAP TO 1" DRAIN 3-INCHES ABOVE FINISH FLOOR. ROUTE 1" DRAIN TO NEAREST TRENCH DRAIN

NO.	DATE	BY	REVISION
1	02/05/2024	SWW	ADDENDUM 1

NOTICE
0 ½ 1
IF THIS BAR DOES NOT MEASURE 1" THEN DRAWING IS NOT TO SCALE

SWW DESIGNED
JLC DRAWN
NCR CHECKED

NATHAN C. ROSKAD STATE OF WASHINGTON 55144 REGISTERED PROFESSIONAL ENGINEER 2-6-2024

consor

Shaping our community together
CITY OF LACEY

CITY OF LACEY, WASHINGTON
WESTSIDE pH TREATMENT PROJECT
LACEY CONTRACT #PW 2022-37

MECHANICAL

PUMP AND PIPING FLOOR PLAN

PROJECT NO.: 21-3172 | SCALE: AS SHOWN | DATE: AUGUST 2023

SCHEDULE B
SHEET
M-2

K:\TAC_Projects\21\3172 - Lacey - Westside PH Treatment\CAD\Sheets\21-3172-WA-M-2.dwg M-2 2/6/2024 8:40 AM JARED.CLOUD 23.0s (LMS Tech)

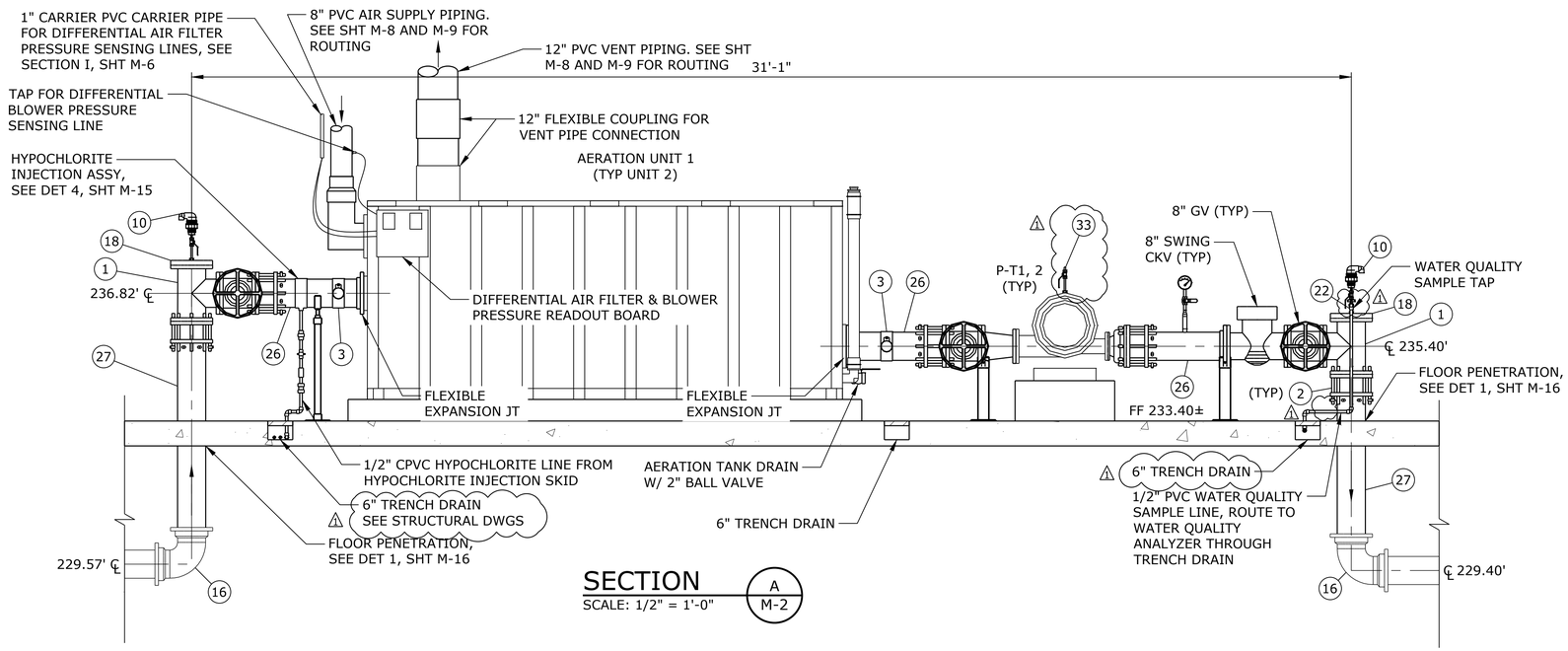

SECTION A / M-2

SCALE: 1/2" = 1'-0"

FITTING LIST:

1. 8" DI TEE, FLG
2. 8" RFCA
3. 2" FLUSHING CONNECTION, SEE DET 2, SHT M-15
4. 8"x5" EXPANISON JOINT RED, FLG
5. PRESSURE GAUGE, SEE DET 1, SHT M-15
6. 6" RFCA
7. 6"x4" TEE, FLG
8. 4" RFCA
9. 4" 90° ELBOW
10. 1" AIR RELEASE VALVE, SEE DET 5, SHT M-14
11. PRESSURE INDICATING TRANSMITTER, SEE DET 4, SHT M-14
12. 8"x6" RED, FLG
13. 6" 90° BEND, MJ, RESTR
14. 8" LONG BODY SLEEVE, MJ, RESTR
15. 6" LONG BODY SLEEVE, MJ, RESTR
16. 8" 90° BEND, MJ, RESTR
17. 6" BLIND FLANGE
18. 8" BLIND FLANGE
19. 2" 90° BEND, FLG
20. 4"x2" EXPANSION JOINT RED, FLG
21. 6"x3" RED, FLG
22. WATER QUALITY SAMPLE TAP, SEE DET 5, SHT M-14
23. 4" 90° BEND, MJ, RESTR
24. 4"x3" RED, FLG
25. 8"x6" TEE, FLG
26. 8" DI SPOOL, FLGxPE
27. 8" DI SPOOL, PE
28. 6" DI SPOOL, PE
29. 4" DI SPOOL, FLGxPE
30. 4" DI SPOOL, PE
31. 4" DI SPOOL, FLG
32. 6" DI SPOOL, FLGxPE
33. PUMP CASING VENT VALVE. PROVIDE TUBING TO ROUTE DISCHARGE VIA AIR GAP TO 1" DRAIN 3-INCHES ABOVE FINISH FLOOR. ROUTE 1" DRAIN TO NEAREST TRENCH DRAIN

NOTES:

1. VENT AND AIR LINE NOT SHOWN FOR CLARITY, SEE SHT M-8 AND M-9 FOR ROUTING

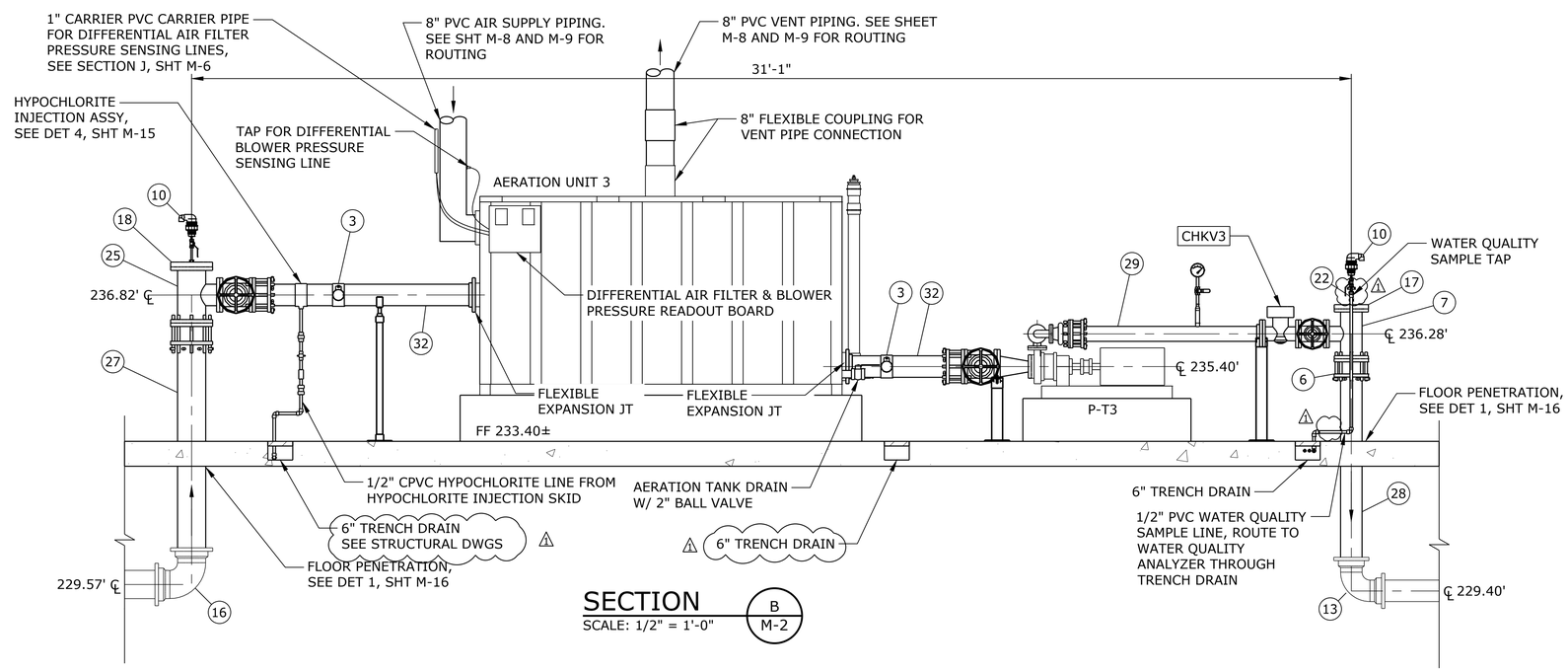

SECTION B / M-2

SCALE: 1/2" = 1'-0"

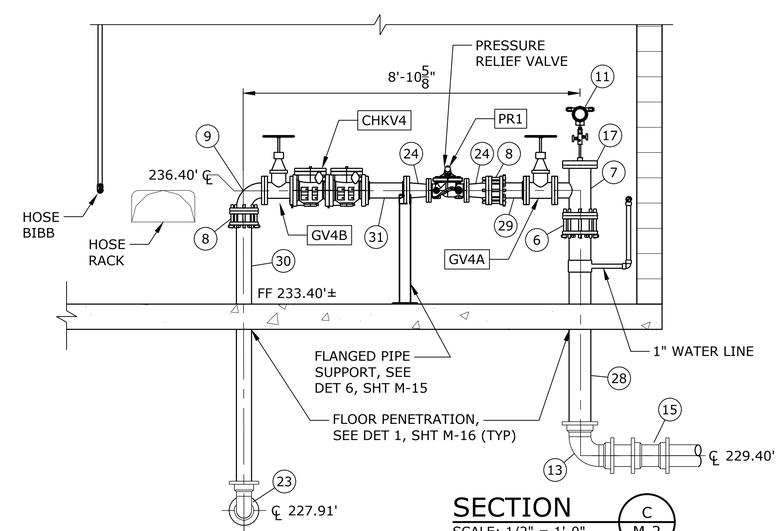

SECTION C / M-2

SCALE: 1/2" = 1'-0"

NO.	DATE	BY	REVISION
1	02/05/2024	SWW	ADDENDUM 1

NOTICE: 0 ½ 1 — IF THIS BAR DOES NOT MEASURE 1" THEN DRAWING IS NOT TO SCALE

SWW DESIGNED
JLC DRAWN
NCR CHECKED

NATHAN C. ROSSAD, STATE OF WASHINGTON, 55144, REGISTERED PROFESSIONAL ENGINEER, 2-6-2024

consor

Shaping our community together — CITY OF LACEY

CITY OF LACEY, WASHINGTON
WESTSIDE pH TREATMENT PROJECT
LACEY CONTRACT #PW 2022-37

MECHANICAL

TREATMENT ROOM SECTIONS - 1

PROJECT NO.: 21-3172 | SCALE: AS SHOWN | DATE: AUGUST 2023

SCHEDULE B
SHEET M-3

K:\TAC_Projects\21\3172 - Lacey - Westside PH Treatment\CAD\Sheets\21-3172-WA-M-3-6.dwg M-3 2/6/2024 8:48 AM JARED.CLOUD 23.0s (LMS Tech)

GENERAL NOTE:

1. ATTACH EXPOSED PLUMBING TO WALLS PER DET 7, SHT M-15.

2. SEE DET 2, SHT M-16 FOR CMU WALL PENETRATION.

3. PROVIDE INSULATION FOR EXPOSED EXTERIOR PIPING PER SPECIFICATION SECTION 22 00 00.

4. ALL MODIFICATIONS AND STARTUP OF FLOW CONTROL VALVES FCV01A AND FCV01B SHALL BE PERFORMED BY A CLA-VAL REPRESENTATIVE.

5. SEE DET 8, SHT M-15 FOR HOSE BIBB DETAIL

6. COAT EXISTING AND NEW PIPING PER SPECIFICATION SECTION 09 90 00.

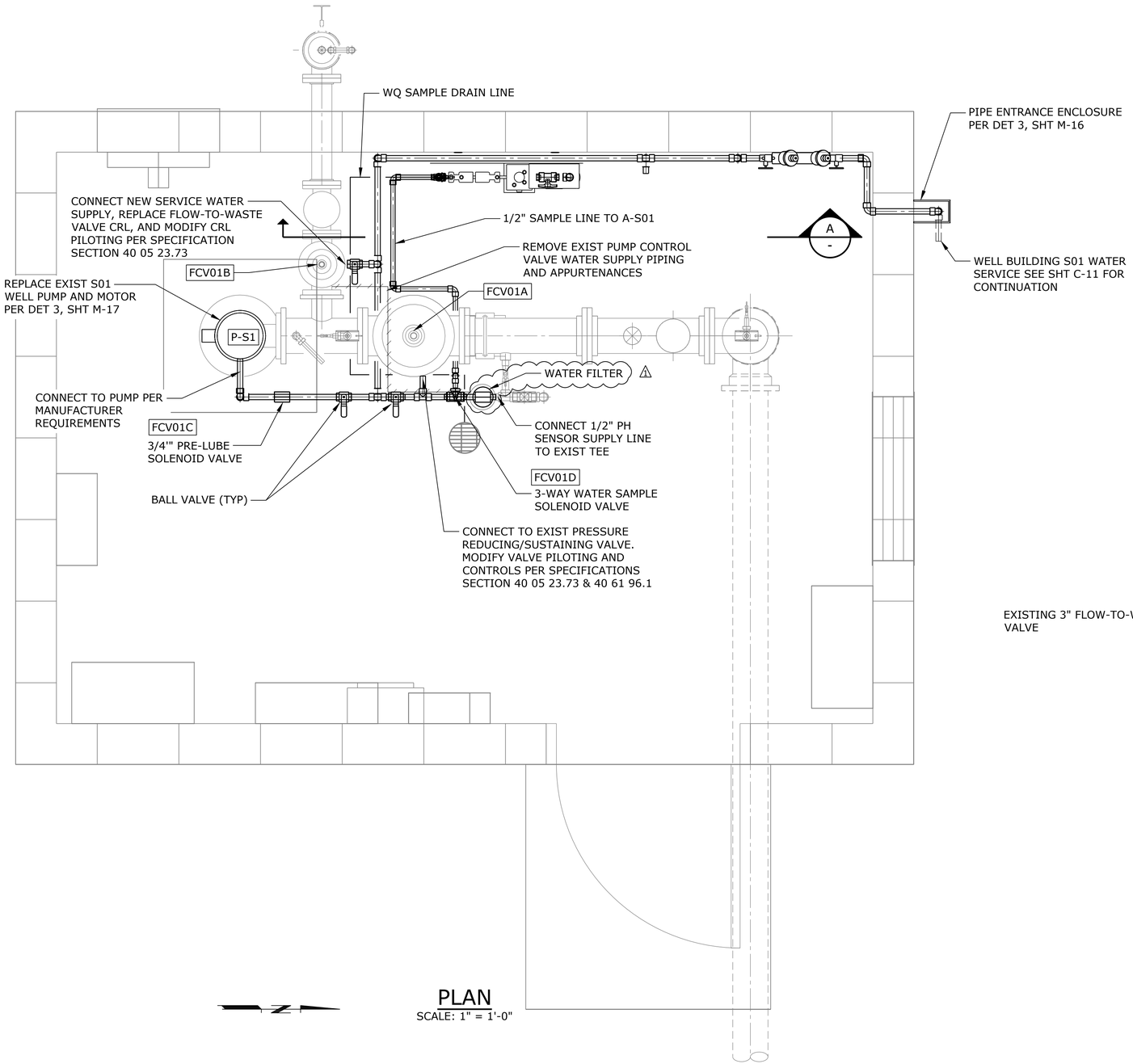

PLAN
SCALE: 1" = 1'-0"

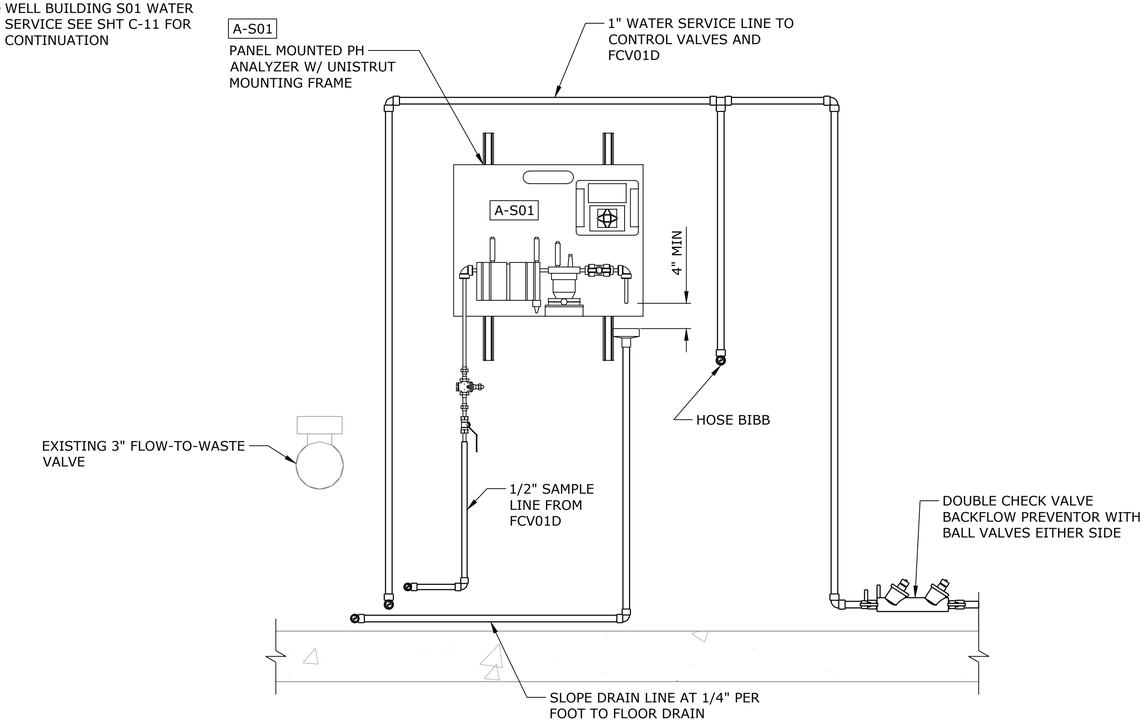

SECTION A
SCALE: 1" = 1'-0"

NO.	DATE	BY	REVISION
1	02/05/2024	SWW	ADDENDUM 1

NOTICE
0 ½ 1
IF THIS BAR DOES NOT MEASURE 1" THEN DRAWING IS NOT TO SCALE

SWW DESIGNED
JLC DRAWN
NCR CHECKED

NATHAN C. ROSTAD STATE OF WASHINGTON 55144 REGISTERED PROFESSIONAL ENGINEER 2-6-2024

consor

Shaping our community together
CITY OF LACEY

CITY OF LACEY, WASHINGTON
WESTSIDE pH TREATMENT PROJECT
LACEY CONTRACT #PW 2022-37

MECHANICAL

EXIST WELL 1 FLOOR PLAN

PROJECT NO.: 21-3172 | SCALE: AS SHOWN | DATE: AUGUST 2023

SCHEDULE B
SHEET
M-10

K:\TAC_Projects\21\3172 - Lacey - Westside PH Treatment\CAD\Sheets\21-3172-WA-M-10.dwg M-10 2/5/2024 10:12 AM JARED.CLOUD 23.0s (LMS Tech)

GENERAL NOTE:

1. ATTACH EXPOSED PLUMBING TO WALLS PER DET 7, SHT M-15.

2. SEE DET 2, SHT M-16 FOR CMU WALL PENETRATION.

3. PROVIDE INSULATION FOR EXPOSED EXTERIOR PIPING PER SPECIFICATION SECTION 22 00 00.

4. ALL MODIFICATIONS AND STARTUP OF FLOW CONTROL VALVES FCV02A AND FCV02B SHALL BE PERFORMED BY A CLA-VAL REPRESENTATIVE.

5. SEE DET 8, SHT M-15 FOR HOSE BIBB DETAIL.

6. COAT EXISTING AND NEW PIPING PER SPECIFICATION SECTION 09 90 00.

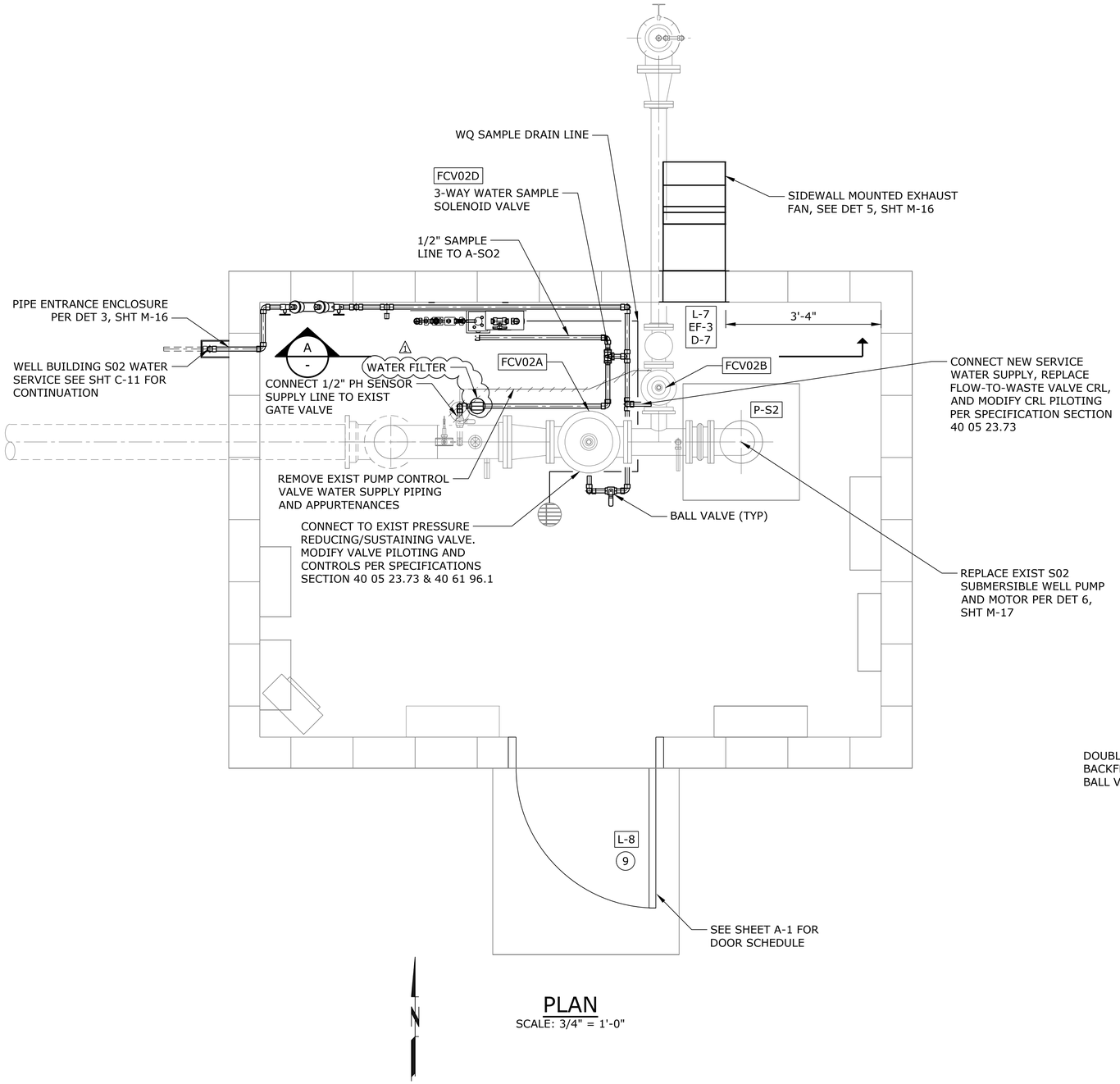

PLAN
SCALE: 3/4" = 1'-0"

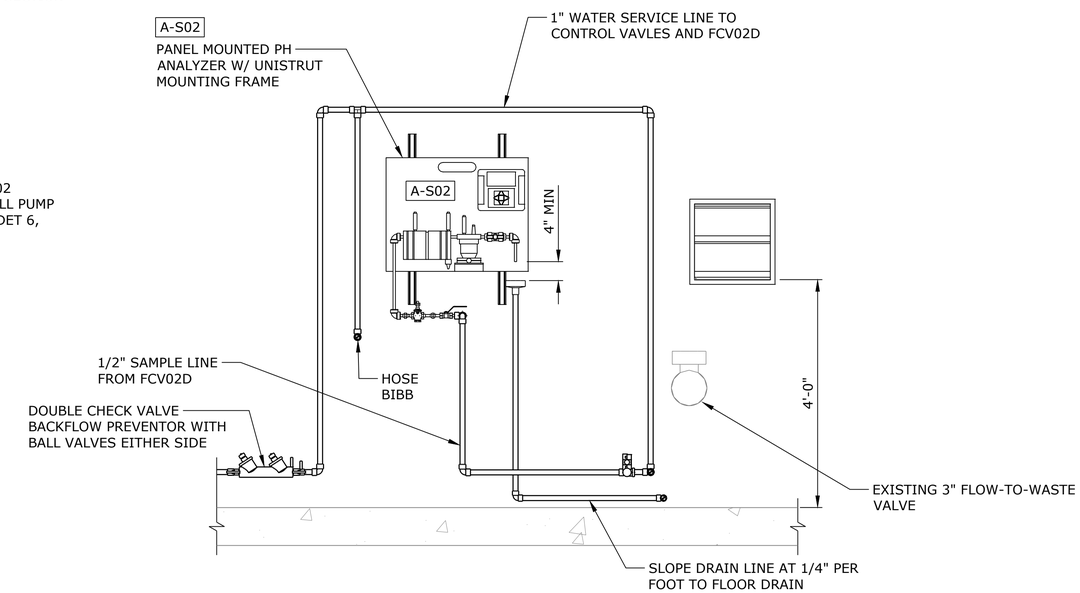

SECTION A -
SCALE: 3/4" = 1'-0"

NO.	DATE	BY	REVISION
1	02/05/2024	SWW	ADDENDUM 1

NOTICE
0 ½ 1
IF THIS BAR DOES NOT MEASURE 1" THEN DRAWING IS NOT TO SCALE

SWW DESIGNED
JLC DRAWN
NCR CHECKED

NATHAN C. ROSTAD STATE OF WASHINGTON 55144 REGISTERED PROFESSIONAL ENGINEER 2-6-2024

consor

Shaping our community together
CITY OF LACEY

CITY OF LACEY, WASHINGTON
WESTSIDE pH TREATMENT PROJECT
LACEY CONTRACT #PW 2022-37

MECHANICAL

EXIST WELL 2 FLOOR PLAN

PROJECT NO.: 21-3172 | SCALE: AS SHOWN | DATE: AUGUST 2023

SCHEDULE B
SHEET
M-11

K:\TAC_Projects\21\3172 - Lacey - Westside PH Treatment\CAD\Sheets\21-3172-WA-M-11.dwg M-11 2/5/2024 10:18 AM JARED.CLOUD 23.0s (LMS Tech)

FITTING LIST:

1. 6"x3" DI TEE, FLG W/ TAPS FOR GRAB SAMPLE AND PRESSURE GAUGE
2. 3" DI 90° BEND, FLG
3. 6" RFCA
4. 3" RFCA
5. 6" EXPANSION JOINT, FLG
6. PRESSURE GAUGE, SEE DET 1, SHT M-15

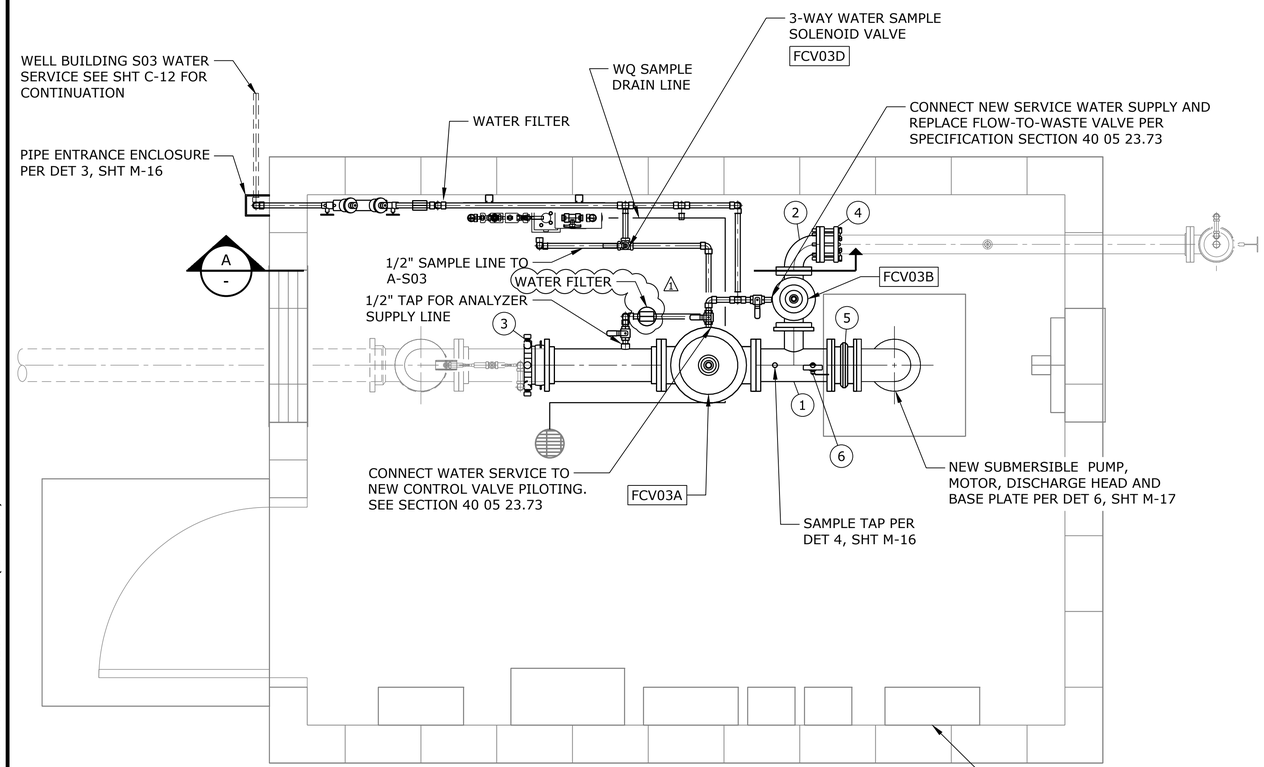

PLAN

SCALE: 3/4" = 1'-0"

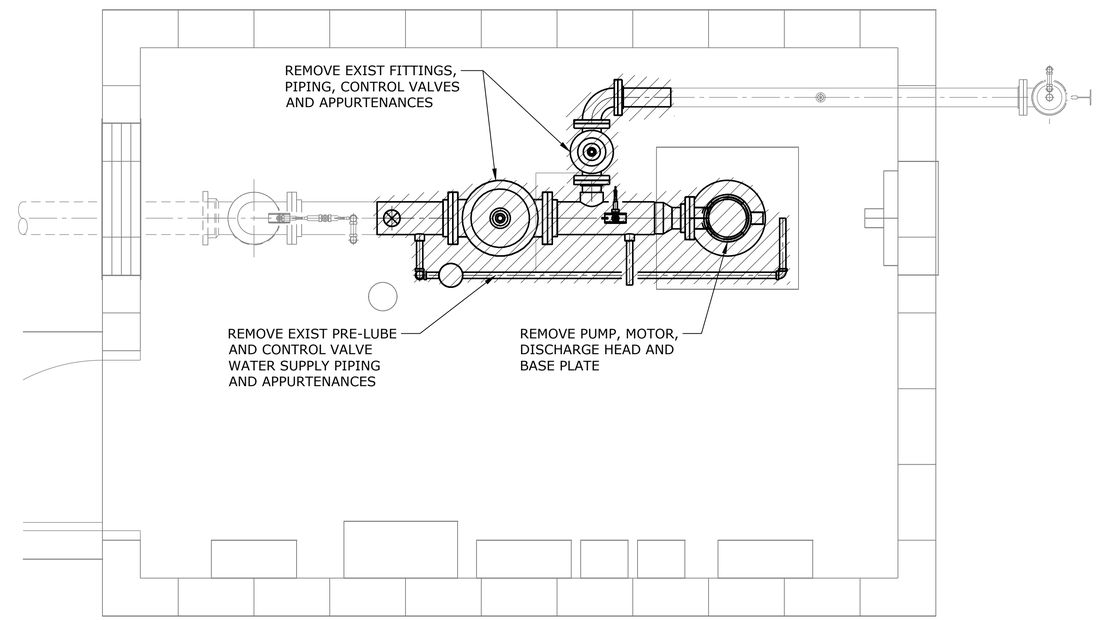

DEMOLITION PLAN

SCALE: 3/4" = 1'-0"

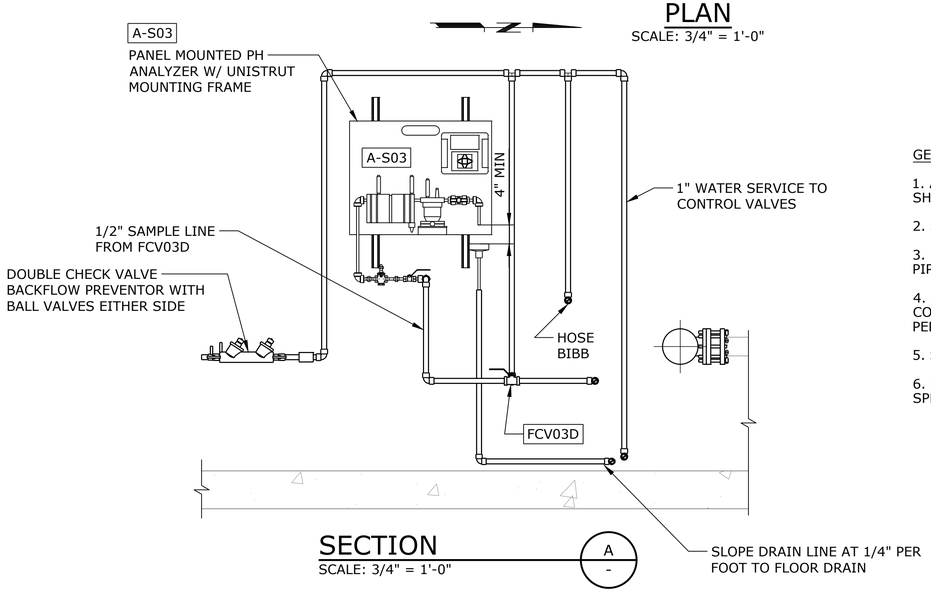

SECTION A -

SCALE: 3/4" = 1'-0"

GENERAL NOTE:

1. ATTACH EXPOSED PLUMBING TO WALLS PER DET 7, SHT M-15.
2. SEE DET 2, SHT M-16 FOR CMU WALL PENETRATION.
3. PROVIDE INSULATION FOR EXPOSED EXTERIOR PIPING PER SPECIFICATION SECTION 22 00 00.
4. ALL MODIFICATIONS AND STARTUP OF FLOW CONTROL VALVES FCV02A AND FCV02B SHALL BE PERFORMED BY A CLA-VAL REPRESENTATIVE.
5. SEE DET 8, SHT M-15 FOR HOSE BIBB DETAIL.
6. COAT EXISTING AND NEW PIPING PER SPECIFICATION SECTION 09 90 00.

NO.	DATE	BY	REVISION
1	02/05/2024	SWW	ADDENDUM 1

NOTICE

0 ½ 1

IF THIS BAR DOES NOT MEASURE 1" THEN DRAWING IS NOT TO SCALE

SWW DESIGNED
JLC DRAWN
NCR CHECKED

NATHAN C. ROSEBAUD, STATE OF WASHINGTON, 55144, REGISTERED PROFESSIONAL ENGINEER, 2-6-2024

consor

Shaping our community together
CITY OF LACEY

CITY OF LACEY, WASHINGTON
WESTSIDE pH TREATMENT PROJECT
LACEY CONTRACT #PW 2022-37

MECHANICAL

EXIST WELL 3 FLOOR PLAN

PROJECT NO.: 21-3172 | SCALE: AS SHOWN | DATE: AUGUST 2023

SCHEDULE B
SHEET
M-12

K:\TAC_Projects\21\3172 - Lacey - Westside PH Treatment\CAD\Sheets\21-3172-WA-M-12.dwg M-12 2/5/2024 10:30 AM JARED.CLOUD 23.0s (LMS Tech)

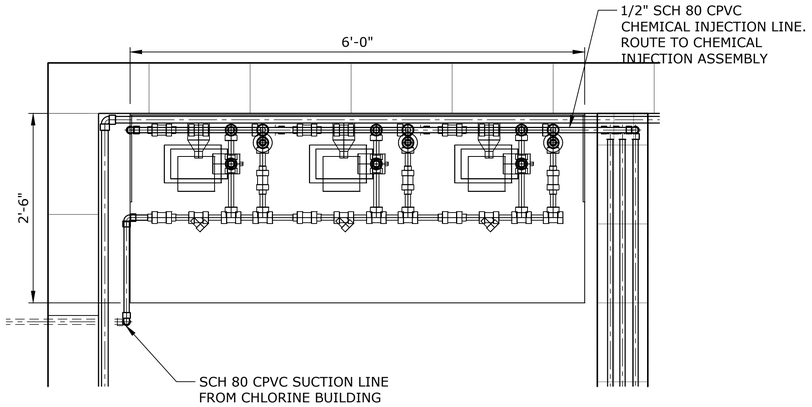

PLAN VIEW

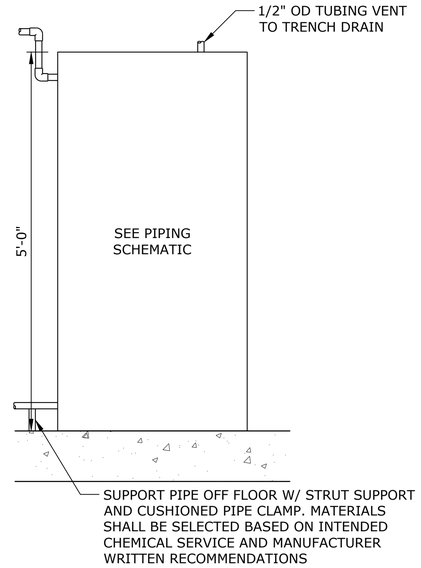

FRONT VIEW

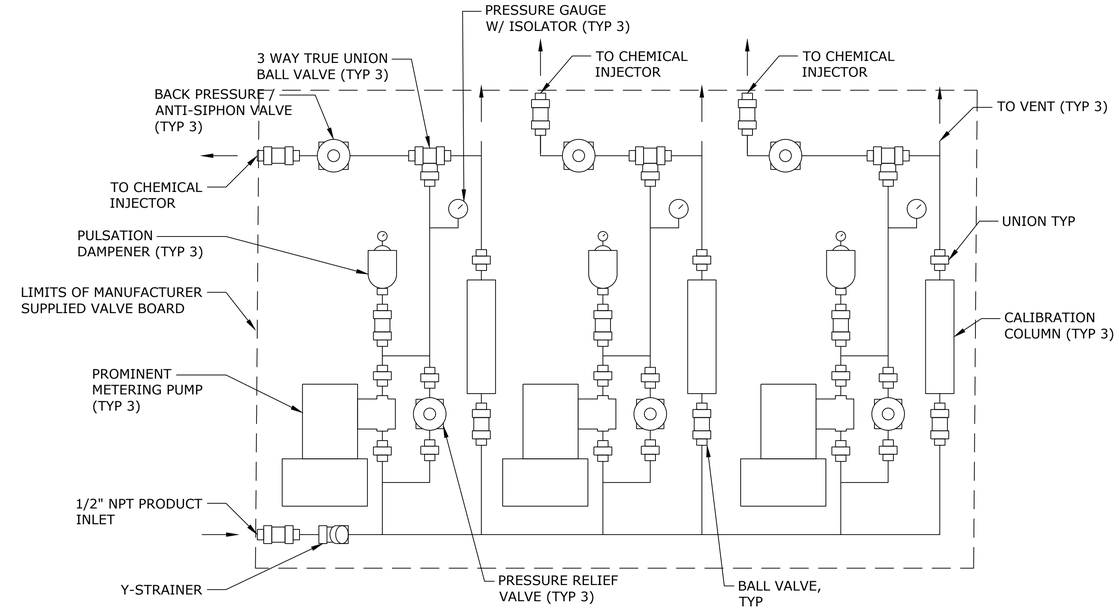

PIPING SCHEMATIC

METERING PUMP VALVE BOARD ASSEMBLY

SCALE: 1" = 1'-0"

1 / M-4

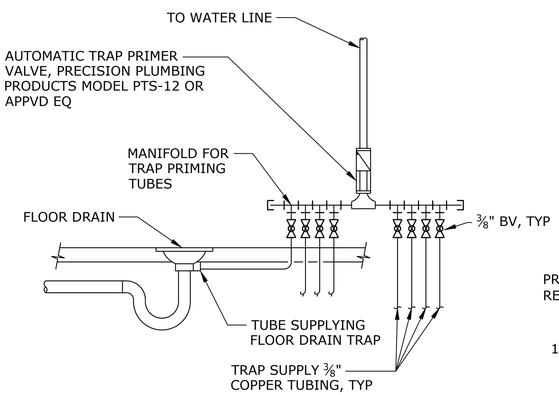

NOTES:

1. TRAP SUPPLY PIPING SHALL CONSTANTLY SLOPE DOWNWARD ON RUN HORIZONTALLY FROM TRAP PRIMER TO FLOOR DRAIN CONNECTION.
2. INSTALL TRAP PRIMER PER MANUFACTURER'S REQUIREMENTS.

FLOOR DRAIN TRAP PRIMER

SCALE: NTS

2 / M-7

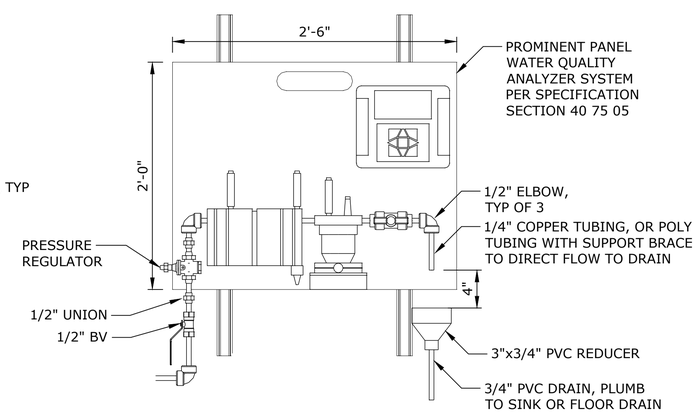

WATER QUALITY ANALYZER BOARD

SCALE: 1 1/2" = 1'-0"

3 / M-2

M-5

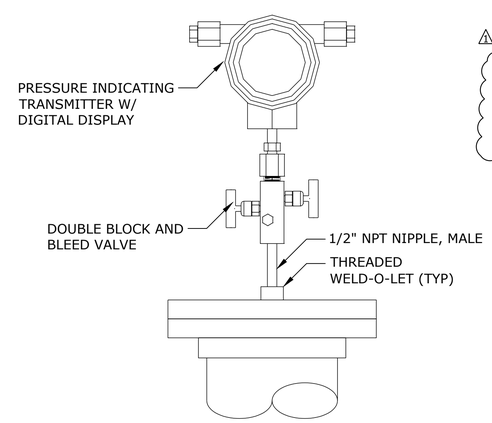

PRESSURE INDICATING TRANSMITTER

SCALE: 3" = 1'-0"

4 / M-3

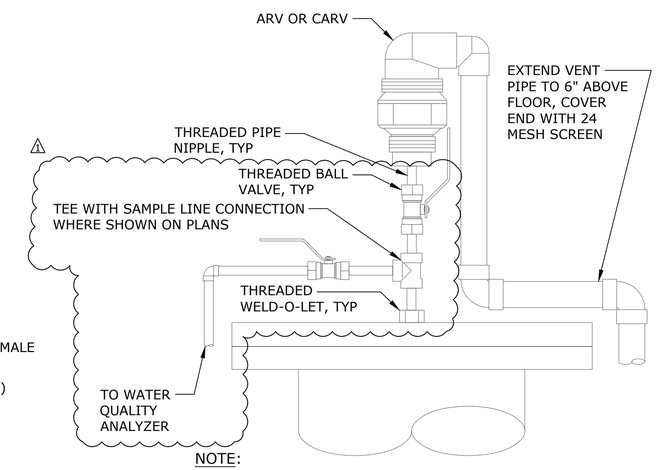

NOTE:

1. PIPE, FITTING, AND VALVE SIZES SHALL MATCH AIR VALVE INLET DIAMETER UNLESS NOTED OTHERWISE.

AIR RELEASE OR COMBINATION AIR/VAC VALVE

SCALE: NTS

5 / M-3

NO.	DATE	BY	REVISION
1	02/05/2024	SWW	ADDENDUM 1

NOTICE

0 ½ 1

IF THIS BAR DOES NOT MEASURE 1" THEN DRAWING IS NOT TO SCALE

SWW DESIGNED

JLC DRAWN

NCR CHECKED

NATHAN C. ROSTAD — STATE OF WASHINGTON — 55144 — REGISTERED PROFESSIONAL ENGINEER — 2-6-2024

consor

Shaping our community together — CITY OF LACEY

CITY OF LACEY, WASHINGTON WESTSIDE pH TREATMENT PROJECT LACEY CONTRACT #PW 2022-37

MECHANICAL

MISCELLANEOUS MECHANICAL DETAILS - 1

PROJECT NO.: 21-3172 | SCALE: AS SHOWN | DATE: AUGUST 2023

SCHEDULE B

SHEET M-14

K:\TAC_Projects\21\3172 - Lacey - Westside PH Treatment\CAD\Sheets\21-3172-WA-M-14-18.dwg M-14 2/6/2024 9:10 AM JARED.CLOUD 23.0s (LMS Tech)

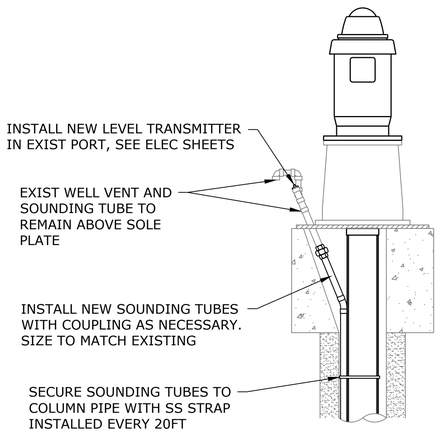

NOTE:
1. DISCHARGE PIPING NOT SHOWN FOR CLARITY
2. CONTRACTOR TO BE RESPONSIBLE FOR CONFIGURATION OF CONNECTION TO EXISTING LEVEL TRANSDUCER AND SOUNDING TUBE PORTS

S01 WELLHEAD MODIFICATIONS (1 / M-10)
SCALE: 3/4" = 1'-0"

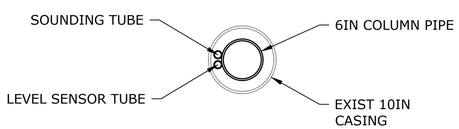

S01 WELL PLAN (2 / M-10)
SCALE: 1" = 1'-0"

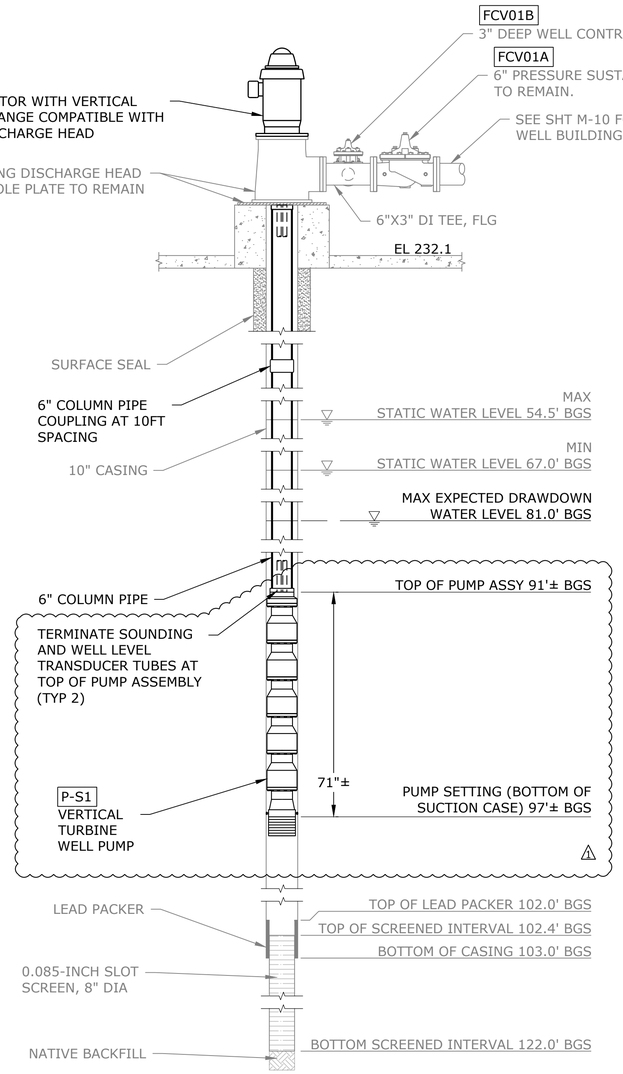

S01 WELL PUMP SETTING (3 / M-10)
SCALE: 1/2" = 1'-0"

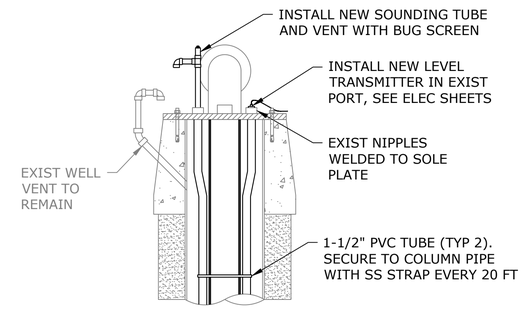

NOTE:
1. DISCHARGE PIPING AND JUNCTION BOX NOT SHOWN FOR CLARITY

S02 WELLHEAD MODIFICATIONS (4 / M-11)
SCALE: 3/4" = 1'-0"

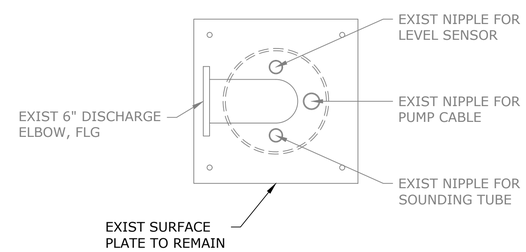

S02 SURFACE PLATE (5 / M-11)
SCALE: 1" = 1'-0"

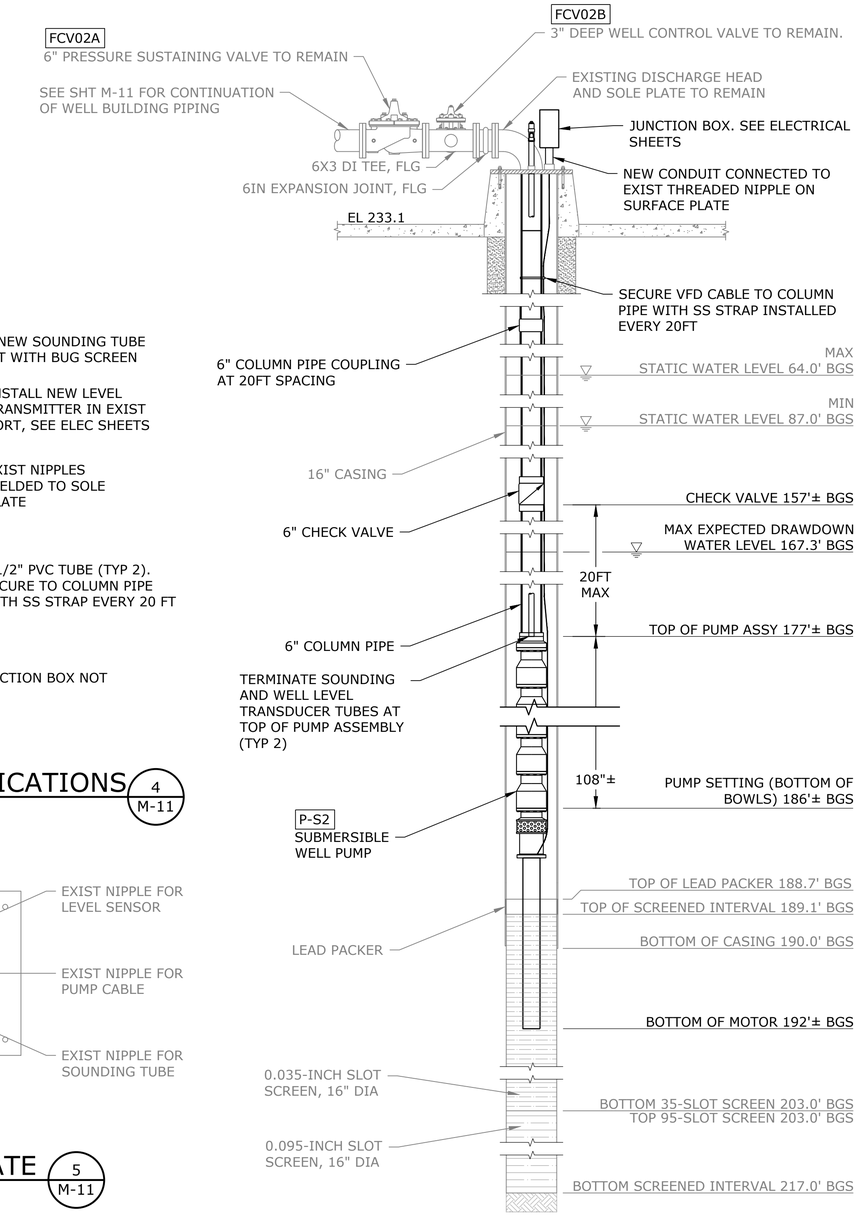

S02 WELL PUMP SETTING (6 / M-11)
SCALE: 1/2" = 1'-0"

NO.	DATE	BY	REVISION
1	02/05/2024	SWW	ADDENDUM 1

NOTICE
0 ½ 1
IF THIS BAR DOES NOT MEASURE 1" THEN DRAWING IS NOT TO SCALE

SWW DESIGNED
SWW DRAWN
NCR CHECKED

NATHAN C. ROSEBAUD, STATE OF WASHINGTON, 55144, REGISTERED PROFESSIONAL ENGINEER, 2-6-2024

consor

Shaping our community together
CITY OF LACEY

CITY OF LACEY, WASHINGTON
WESTSIDE pH TREATMENT PROJECT
LACEY CONTRACT #PW 2022-37

MECHANICAL
WELL SETTING DETAILS -1

PROJECT NO.: 21-3172 | SCALE: AS SHOWN | DATE: AUGUST 2023

SCHEDULE B
SHEET
M-17

K:\TAC_Projects\21\3172 - Lacey - Westside PH Treatment\CAD\Sheets\21-3172-WA-M-14-18.dwg M-17 2/6/2024 9:10 AM JARED.CLOUD 23.0s (LMS Tech)